DOCUMENT 00001

PUBLIC WORKS DEPARTMENT
10300 TORRE AVENUE
CUPERTINO, CALIFORNIA 95014

PROJECT MANUAL

FOR THE

2014 SIDEWALK ACCESSIBILITY IMPROVEMENTS

Bid Date:

Tuesday, April 7, 2015

Project Number: 2014-15

DOCUMENT 00002

SIGNATURE PAGE

PROJECT MANUAL FOR

2014 Sidewalk Accessibility Improvements

PROJECT NO. 2014-15

REVIEWED BY:

Roger Lee
Assistant Director of Public Works

APPROVED BY:

Timm Borden
Director of Public Works

DOCUMENT 00003

PROJECT DIRECTORY

Project Name: 2014 Sidewalk Accessibility Improvements
Project Number: 2014-15

Location: 10300 Torre Avenue

City Representative:

Roger Lee
Assistant Director of Public Works
City of Cupertino
Public Works Department
10300 Torre Avenue
Cupertino, CA 95014
PH: 408-777-3354
FX: 408-777-3333
e-mail: RogerL@Cupertino.org

Address for Stop Notices/Lien Notices:

City of Cupertino
Public Works Department
10300 Torre Avenue
Cupertino, CA 95014

DOCUMENT 00010

TABLE OF CONTENTS

INTRODUCTORY DOCUMENTS

Document	Title
00001	Title Page
00002	Signature Page
00003	Project Directory
00010	Table of Contents
00012	Caltrans/City Cross-Reference Table

BIDDING DOCUMENTS

Document	Title
00100	Advertisement for Bids
00200	Instructions to Bidders
00210	Indemnity and Release Agreement
00400	Bid Form
00411	Bond Accompanying Bid
00430	Subcontractors List
00450	Statement of Qualifications
00481	Non-Collusion Affidavit
00482	Bidder Certifications

CONTRACTING DOCUMENTS

Document	Title
00520	Contract
00530	Insurance Forms
00610	Construction Performance Bond
00620	Construction Labor and Material Payment Bond
00630	Guaranty
00650	Agreement and Release of Any and All Claims
00660	Substitution Request Form

GENERAL CONDITIONS DOCUMENTS

Document	Title
00700	General Conditions
00800	Special Conditions
00820	Traffic Control Requirements
00821	Insurance Documents
00822	Apprenticeship Program

TECHNICAL SPECIFICATIONS

Document	Title
01010	Technical Specifications
Attachment A	List of Streets Near Schools

DOCUMENT 00012

CALTRANS/CITY CROSS-REFERENCE TABLE

Whenever Standard Specifications Section 1 through 9 are referenced, the referenced sections are hereby deleted and the corresponding Document and Section in the following table shall be substituted.

Caltrans Standard Specification - 2006		**City Contract Documents - 2007**		
Section #	**Title**	**Document #**	**Section #**	**Title**
1	**Definition and Terms**	00700		Abbreviations and Definitions
-	-			
2	**Proposal Requirements and Conditions**			
2-1.01	Contents of Proposal	00200		Instruction to Bidders
2-1.02	Approximate Estimate	00200		Instruction to Bidders
2-1.03	Examination of Plans, Specifications, Contract and Site of Work	00200 & 00320		Instruction to Bidders & Geotechnical Data and Exiting Conditions
2-1.04	Blank			
2-1.05	Proposal Forms	200		Instruction to Bidders
2-1.054	Required Listing of Proposed Subcontractors	00200 & 00800		Instruction to Bidders & Advertisement for Bids
2-1.056	State Employees and Design Engineers May Not Bid on Construction Contract	00200		Instruction to Bidders
2-1.06	Rejection of Proposals	00200		Instruction to Bidders
2-1.07	Proposal Guaranty	00200		Instruction to Bidders
2-1.08	Withdrawal of Proposals	00200		Instruction to Bidders
2-1.09	Public Opening of Proposals	00200		Instruction to Bidders
2-1.095	Relief of Bidders			Public Contract Code
2-1.10	Disqualification of Bidders	00481		Non-Collusion Affidavit
2-1.105	Previous Disqualification, Removal or Other Prevention of Bidding	00200 & 00450		Instruction to Bidders & Statement of Qualifications & Public Contract Code
2-1.108	Compliance with Orders of the National Labor Relations Board	00482		Bidder Certifications & Public Contract Code
2-1.11	Ineligibility to Contract	00481		Non-Collusion Affidavit & Public contract Code
2-1.12	Material Guaranty	00630 & 00700	4.9	Guaranty & General Conditions : Warranty and Inspection
3	**Award and Execution of Contract**			
3-1.01	Award of Contract	00200		Instruction to Bidders
3-1.02	Contract Bonds	00610 & 00620 & 00700	2.2	Constructions Performance Bond & Construction Labor and Material Payment Pond & General Conditions : Contractor's Bonds

CALTRANS/CITY CROSS-REFERENCE TABLE

Caltrans Standard Specification - 2006		City Contract Documents - 2007		
Section #	**Title**	**Document #**	**Section #**	**Title**
3-1.025	Insurance Policies	00700 & 00821		Insurance & General Conditions : Contractor's Insurance
3-1.03	Execution of Contract	00510		Notice of Award
3-1.04	Failure to Execute Contract	00200		Instruction to Bidders
3-1.05	Return of Proposal Guaranties	00200		Instruction to Bidders
4	**Scope of Work**			
4-1.01	Intent of Plans and Specifications	00700	1.2 & 1.3	General Conditions : Clarification of Contract & Contract Documents Complementary
4-1.02	Final Cleaning Up	00700	3.2	General Conditions : Cleaning
4-1.03	Changes	00700	3.3	General Conditions : Change In Work
4-1.03A	Procedure and Protest	00700	3.3	General Conditions : Change In Work
4-1.03B	Increased or Decreased Quantity	00700	3.3	General Conditions : Change In Work
4-1.03B(1)	Increases of More Than 25 Percent	00700	3.3	General Conditions : Change In Work
4-1.03B(2)	Decrease of More Than 25 Percent	00700	3.3	General Conditions : Change In Work
4-1.03B(3)	Eliminated Items	00700	3.3	General Conditions : Change In Work
4-1.03C	Changes in Character of Work	00700	3.3	General Conditions : Change In Work
4-1.03D	Extra Work	00700	3.3	General Conditions : Change In Work
4-1.04	Detours	00700	3.4	General Conditions : Detours
4-1.05	Use of Materials Found on the Work	00700	6.21	General Conditions : Title to Materials Found on the Work
5	**Control of Work**			
5-1.01	Authority of Engineer	00700	4.1	General Conditions : Authority of City
5-1.02	Plans and Working Drawing	00700	1.2 & 4.2	General Conditions :Clarification of Contract & Submittals to be Furnished by Contractor
5-1.02A	Trench Excavation Safety Plans	00700	3.9	General Conditions : Excavation Safety Plans
5-1.03	Conformity with Contract Documents and Allowable Deviations	00700	4.3	General Conditions : Conformity with Contract Documents and Allowable Deviations
5-1.04	Coordination and Interpretations of Plans, Standard Specifications, and Special Provisions	00700	1.1	General Conditions : Precedence of Contract
5-1.05	Order of Work	00700	4.4	General Conditions : Order of Work
5-1.06	Superintendence	00700	4.6	General Conditions : Superintendence
5-1.07	Lines and Grades	00700	4.8	General Conditions : Layout of Work and Surveys
5-1.08	Inspection	00700	5.1 & 5.5	General Conditions: : Source of Supply and Quality of Materials & Plant Inspection

CALTRANS/CITY CROSS-REFERENCE TABLE

Caltrans Standard Specification - 2006		**City Contract Documents - 2007**		
Section #	**Title**	**Document #**	**Section #**	**Title**
5-1.09	Removal of Rejected and Unauthorized Work	00700	4.10 & 5.4	General Conditions : Defective and Unauthorized Work & Defective Materials
5-1.10	Equipment and Plants	00700	4.11	General Conditions : Construction Equipment and Plant
5-1.11	Alternative Equipment	00700	4.11	General Conditions : Construction Equipment and Plant
5-1.115	Alternative Methods of Construction	00700	3.11	General Conditions : Substitutions
5-1.116	Differing Site Conditions	00700	1.2 & 3.6	General Conditions : Clarification of Contract & Changed Site Conditions
5-1.12	Character of Workers	00700	4.7	General Conditions : Character of Workers
5-1.13	Final Inspection	00700	4.12	General Conditions : Substantial Completion, Final Completion and Final Acceptance
5-1.14	Cost Reduction Incentive	00700	3.7	General Conditions : Cost Reduction Incentive
6	**Control of Material**			
6-1.01	Source of Supply and Quality of Materials	00700	5.1	General Conditions : Source of Supply and Quality of Materials
6-1.02	State-Furnished Materials	00700	5.2	General Conditions : City-Furnished Materials
6-1.03	Storage of Materials	00700	5.3	General Conditions : Storage of Materials
6-1.04	Defective Materials	00700	5.4	General Conditions : Defective Materials
6-1.05	Trade Names and Alternatives	00700	3.11	General Conditions : Substitutions
6-1.06	Plant Inspection	00700	5.5	General Conditions : Plant Inspection
6-1.07	Certificate of Compliance	00700	5.6	General Conditions : Certificates of Compliance
6-1.08	Foreign Materials	00700	5.1	General Conditions : Source of Supply and Quality of Materials
6-1.09	State Specification Numbers			**NOT APPLICABLE**
6-2.01	Local Materials - General	00700	5.1	General Conditions : Source of Supply and Quality of Materials
6-2.02	Possible Local Material Sources			**NOT APPLICABLE**
6-2.03	Mandatory Local Material Sources			**NOT APPLICABLE**
6-3.01	Testing - General	00700	5.8	General Conditions : Testing
6-3.02	Testing by Contractor	00700	5.8	General Conditions : Testing
7	**Legal Relations and Responsibility**			
7-1.01	Laws to be Observed	00700	6.1	General Conditions : Laws to be Observed
7-1.01A	Labor Code Requirements	00700	6.6	General Conditions : Apprentices
7-1.01A(1)	Hours of Labor	00700	6.5	General Conditions : Hours of Labor
7-1.01A(2)	Prevailing Wage	00700	6.4	General Conditions : Prevailing Wages
7-1.01A(2)(a)	Travel and Subsistence Payment	00700	3.4	General Conditions : Change in Contract Price & Labor Code

CALTRANS/CITY CROSS-REFERENCE TABLE

Caltrans Standard Specification - 2006		City Contract Documents - 2007		
Section #	**Title**	**Document #**	**Section #**	**Title**
7-1.01A(3)	Payroll Records	00700	6.4	General Conditions : Prevailing Wages & Labor Code
7-1.01A(4)	Labor Nondiscrimination	00700	6.2	General Conditions : Labor Discrimination & Labor Code
7-1.01A(5)	Apprentices	00700	6.6	General Conditions : Apprentices
7-1.01A(6)	Workers' Compensation	00700 & 00821	2.1	Insurance & General Conditions : Contractor's Insurance
7-1.01A(7)	Suits to Recover Penalties and Forfeitures			Labor Code
7-1.01B	Fair Labor Standards Act			Fair Labor Standard Act of 1938
7-1.01C	Contractor's Licensing Laws			Public Contract Code & Business and Professions Code
7-1.01D	Vehicle Code			Vehicle Code
7-1.01E	Trench Safety	00700	3.9	General Conditions : Evacuation Safety
7-1.01F	Air Pollution Control			Government Code
7-1.01G	Water Pollution	00700	3.14	General Conditions : Storm Water Pollution Control
7-1.01H	Use of Pesticides	00700	3.12	General Conditions :Hazardous Material/Waste
7-1.01I	Sound Control Requirements	00700	6.26	General Conditions : Sound Control
7-1.01J	Assignment of Antitrust Actions			Public Contract Code & Government Code
7-1.02	Load Limitations			Vehicle Code
7-1.03	Payment of Taxes	00700	6.17	General Conditions : Payment of Taxes
7-1.04	Permits and Licenses	00700	6.7	General Conditions : Permits and Licenses
7-1.05	Patents	00700	6.8	General Conditions : Patents and Copyrights
7-1.06	Safety and Health Provisions	00700	6.1	General Conditions : Laws to be Observed
7-1.07	Blank			
7-1.08	Public Convenience	00700	6.9	General Conditions : Public Safety and Traffic Control
7-1.09	Public Safety	00700	6.9	General Conditions : Public Safety and Traffic Control
7-1.10	Use of Explosives	00700	6.11	General Conditions : Explosives and Stream Pollution
7-1.11	Preservation of Property	00700	6.14	General Conditions : Preservation of Property
7-1.12	Indemnification and Insurance	00700	2.1 & 6.16	General Conditions : Contractor's Insurance & Indemnification
7-1.12A	Indemnification	00700	6.16	General Conditions : Indemnification
7-1.12B	Insurance	00700 & 00821	2	Insurance & General Conditions : Contractor's Insurance
7-1.12B(1)	General	00700 & 00821	2.1	Insurance & General Conditions : Contractor's Insurance
7-1.12B(2)	Casualty Insurance	00700 & 00821	2.1	Insurance & General Conditions : Contractor's Insurance
7-1.12B(3)	Workers' Compensation and Employer's Liability Insurance	00700 & 00821	2.1	Insurance & General Conditions : Contractor's Insurance

CALTRANS/CITY CROSS-REFERENCE TABLE

Caltrans Standard Specification - 2006		**City Contract Documents - 2007**		
Section #	**Title**	**Document #**	**Section #**	**Title**
7-1.12B(4)	Liability Insurance	00700 & 00821	2.1	Insurance & General Conditions : Contractor's Insurance
7-1.12B(4)(a)	General	00700 & 00821	2.1	Insurance & General Conditions : Contractor's Insurance
7-1.12B(4)(b)	Liability Limits/Additional Insureds	00821		Insurance
7-1.12B(4)©	Contractor's Insurance Policy is Primary	00821		Insurance
7-1.12B(5)	Automobile Liability Insurance	00821		Insurance
7-1.12B(6)	Policy Forms, Endorsements, and Certificates	00821		Insurance
7-1.12B(7)	Deductibles	00821		Insurance
7-1.12B(8)	Enforcement	00821		Insurance
7-1.12B(9)	Self-Insurance	00821		Insurance
7-1.125	Legal Actions Against the Department			**NOT APPLICABLE**
7-1.13	Disposal of Material Outside the Highway Right of Way	00700	3.13	General Conditions : Inert Solids and Plant Material Recycling
7-1.14	Cooperation	00700	6.18	General Conditions : Cooperation with Others
7-1.15	Relief from Maintenance and Responsibility	00700	4.12	General Conditions : Substantial Completion, Final Completion and Final Acceptance
7-1.16	Contractor's Responsibility for the Work and Materials	00700	6.15	General Conditions : Contractor's Responsibility for Work
7-1.165	Damage by Storm, Flood, Tsunami or Earthquake	00700	3.5	General Conditions : Change in Contract Time
7-1.17	Acceptance of Contract	00700	4.12	General Conditions : Substantial Completion, Final Completion and Final Acceptance
7-1.18	Property Rights in Materials	00700	6.19	General Conditions : Property Right in Materials
7-1.19	Rights in Land and Improvements	00700	6.20	General Conditions : Rights in Land and Improvements
7-1.20	Personal Liability	00700	6.29 & 6.30	General Conditions : Interest of Public Officers & Limit of Liability
7-1.21	Repair of Equipment			**NOT APPLICABLE**
7-1.22	Material Plants	00700	6.4	General Conditions : Prevailing Wages
8	**Prosecution and Progress**			
8-1.01	Subcontracting	00700	6.23	General Conditions : Subcontracting
8-1.02	Assignment	00700	7.1	General Conditions : Assignment
8-1.03	Beginning of Work	00700	7.3	General Conditions : Commencement of Work
8-1.04	Progress Schedule	00700	7.4	General Conditions : Work Progress Schedule
8-1.05	Temporary Suspension of Work	00700	7.5	General Conditions : Temporary Suspension of Work
8-1.06	Time of Completion	00520 & 00700	4.12	Contract & General Conditions : Substantial Completion, Final Completion and Final Acceptance

CALTRANS/CITY CROSS-REFERENCE TABLE

Caltrans Standard Specification - 2006		**City Contract Documents - 2007**		
Section #	**Title**	**Document #**	**Section #**	**Title**
8-1.07	Liquidated Damages	00520 & 00700	7.6	Contract & General Conditions : Liquidated Damages
8-1.08	Termination of Control	00700	7.7	General Conditions : Termination of Control
8-1.09	Right of Way Delays	00700	7.16	General Conditions : Right of Way Delays
8-1.10	Utility and Non-Highway Facilities	00700	7.11	General Conditions : Coordination with Utilities
8-1.11	Termination of Contact	00700	7.8 & 7.9	General Conditions : Termination of Contract for Cause & Termination of Contract for Convenience
9	**Measurement and Payment**			
9-1.01	Measurement and Quantities	00700	8.1	General Conditions : Measurement of Quantities
9-1.015	Final Pay Items	00700	8.3	General Conditions : Progress Payment
9-1.02	Scope of Payment	00700	3.4	General Conditions : Change in Contract Price
9-1.03	Force Account Payment	00700	3.4	General Conditions : Change in Contract Price
9-1.03A	Work Performed by Contractor	00700	3.4	General Conditions : Change in Contract Price
9-1.03A(1)	Labor	00700	3.4	General Conditions : Change in Contract Price
9-1.03A(1a)	Actual Wage	00700	3.4	General Conditions : Change in Contract Price
9-1.03A(1b)	Labor Surcharge	00700	3.4	General Conditions : Change in Contract Price
9-1.03A(1c)	Subsistence and Travel Allowance	00700	3.4	General Conditions : Change in Contract Price
9-1.03A(2)	Materials	00700	3.4	General Conditions : Change in Contract Price
9-1.03A(2a)		00700	3.4	General Conditions : Change in Contract Price
9-1.03A(2b)		00700	3.4	General Conditions : Change in Contract Price
9-1.03A(2c)		00700	3.4	General Conditions : Change in Contract Price
9-1.03A(2d)		00700	3.4	General Conditions : Change in Contract Price
9-1.03A(2e)		00700	3.4	General Conditions : Change in Contract Price
9-1.03A(3)	Equipment Rental	00700	3.4	General Conditions : Change in Contract Price
9-1.03A(3a)	Equipment on the Work	00700	3.4	General Conditions : Change in Contract Price
9-1.03A(3b)	Equipment not on the Work	00700	3.4	General Conditions : Change in Contract Price
9-1.03A(3c)	Owner-Operated Equipment	00700	3.4	General Conditions : Change in Contract Price
9-1.03A(3d)	Dump Truck Rental			**NOT APPLICABLE**
9-1.03B	Work Performed by Special Forces or Other Special Services	00700	3.4	General Conditions : Change in Contract Price
9-1.03C	Records	00700	3.4	General Conditions : Change in Contract Price
9-1.03D	Payment	00700	3.4	General Conditions : Change in Contract Price
9-1.04	Notice of Potential Claim	00700	9	General Conditions : Claims by Contractor
9-1.05	Stop Notices			Civil Code
9-1.06	Partial Payments	00700	8.3	General Conditions : Progress Payment

CALTRANS/CITY CROSS-REFERENCE TABLE

Caltrans Standard Specification - 2006		**City Contract Documents - 2007**		
Section #	**Title**	**Document #**	**Section #**	**Title**
9-1.065	Payment of Withheld Funds	00700	8.6	General Conditions : Substitution of Securities in Lieu of Retention
9-1.07	Payment after Acceptance	00700	8	General Conditions : Measurement and Payment
9-1.07A	Payment Prior to Proposed Final Estimate	00700	8	General Conditions : Measurement and Payment
9-1.07B	Final Payment and Claims	00700	8.4	General Conditions : Final Payment
9-1.08	Adjustment of Overhead Costs			**NOT APPLICABLE**
9-1.09	Clerical Errors			**NOT APPLICABLE**
9-1.10	Arbitration	00700	9.4	General Conditions : Mediation

DOCUMENT 00012

CALTRANS/CITY CROSS-REFERENCE TABLE

Caltrans Standard Specification - 2006		City Contract Documents - 2007		
Section #	**Title**	**Document #**	**Section #**	**Title**

DOCUMENT 00100

ADVERTISEMENT FOR BIDS

NOTICE: THE CITY OF CUPERTINO, a Municipal Corporation of the State of California ("City") hereby gives notice that it will accept Bids for construction of the following public work:

CITY PROJECT NUMBER 2014-15
2014 SIDEWALK ACCESSIBILITY IMPROVEMENTS

1. **BID SUBMISSION:** The City uses a two-part Bid process with Bids in **Envelope "A"** and Statements of Qualification and Financial information in **Envelope "B"**. City will accept **Envelope "A" and Envelope "B"** no later than **2:00 p.m.** on **April 7, 2015 in the City Clerks Office.** Bids will be publicly read at 2:00 p.m. in City Hall Conference Room 100 located at 10300 Torre Avenue. City's representative will call out the designated time in the Office of the City Clerk, 10300 Torre Avenue, stating that the period for accepting Bids is closed. The Bid opening will be in accordance with procedures set forth in Document 00200 (Instructions to Bidders).

2. **CONTACT INFORMATION:**

   Mailing address:
   City of Cupertino
   10300 Torre Ave
   Cupertino, CA 95014

   City's Authorized Representative:
   Roger Lee
   Assistant Director of Public Works

   Telephone:
   (408) 777 3354 general

   Email:
   RogerL@Cupertino.org

   Fax:
   (408) 777 3333 fax

3. **STATEMENT OF QUALIFICATIONS:** Each Bidder shall be required to submit a "Statement of Qualifications" in accordance with Document 00200 (Instructions to Bidders) and Document 00450 (Statement of Qualifications for Construction Work).

4. **DESCRIPTION OF THE WORK:** Work generally consists of removing and replacing existing concrete curb, gutters and sidewalks, and driveway approaches.

5. **CONTRACT TIME:** Work shall be finally completed within 110 working days. All work located on streets near schools shall be complete by June 11, 2015(see attachment A). The City anticipates issuing a notice to proceed on or before April 21, 2015. Contract shall be ready to commence work upon issuance of Notice to Proceed.

6. **REQUIRED CONTRACTOR'S LICENSE:** A California **Class A or Class C-8** contractor's license is required to Bid this Contract. Joint ventures must secure a joint venture license prior to award of this Contract. Removal, handling, and/or disposal of hazardous materials may, by law, require hazardous substance removal certification by the Contractor's State License Board.

7. **Required Contractor and Subcontractor Registration [Applies if bid is submitted on or after March 1, 2015 or if Contract is awarded on or after April 1, 2015. Labor Code Section 1771.1]**
   a. Owner shall accept Bids only from Bidders that (along with all Subcontractors listed in Document 00430 Subcontractor List) are currently registered and qualified to perform public work pursuant to Labor Code Section 1725.5.
   b. Subject to Labor Code Sections 1771.1(c) and (d), any Bid not complying with Paragraph 1.01A above shall be returned and not considered; provided that if Bidder is a joint venture (Business & Professions Code Section 7029.1) or if federal funds are involved in the Contract (Labor Code Section 1771.1(a)), Owner may accept a non-complying Bid provided that Bidder and all listed Subcontractors are registered at the time of Contract award.

8. **PREVAILING WAGE LAWS:** The successful Bidder must comply with all prevailing wage laws applicable to the Project, and related requirements contained in the Contract Documents.

9. **INSTRUCTIONS:** Bidders shall refer to Document 00200 (Instructions to Bidders) for required documents and items to be submitted in sealed envelopes to City Clerk's office, as well as applicable times for submission.

10. **SUBSTITUTION OF SECURITIES:** City will permit successful Bidder to substitute securities for retention monies withheld to ensure performance of Contract, as set forth in Document 00680 (Escrow Agreement for Security Deposits in Liu of Retention), in accordance with California Public Contract Code, Section 22300. By this reference, Document 00680 (Escrow Agreement for Security Deposits in Lieu of Retention) is incorporated in full in this Document 00100.

11. **PROCUREMENT OF BIDDING DOCUMENTS:** Bidders may examine a complete hard-copy set of bid documents at the City's Public Works Department, City Hall, 10300 Torre Avenue in Cupertino.

    To obtain a copy of the bid documents, Bidders must download a set of bid documents from the City of Cupertino Web site at: http://www.cupertino.org/index.aspx?page=119, or from a plan room or trade journal site that carries them. The City will post all addendums to the project on the City web site and it is the Contractor's sole responsibility to download the addendums for the project. If a Contractor wishes to be on the plan holders list for the project the Contractor must send an email to: pavementprojects@cupertino.org containing the following information: Contractor's name, address, phone and fax number, and e-mail address for future communications. The plan holders list will be updated daily. Bidder is responsible for printing all of the bidding documents.

12. **BID PREPARATION COST:** Bidders are solely responsible for the cost of plan and specification printing and preparing their Bids.

13. **RESERVATION OF RIGHTS:** City specifically reserves the right, in its sole discretion, to reject any or all Bids, or re-bid, or to waive inconsequential deviations from Bid requirements not involving time, price, or quality of the Work.

14. **PORTION OF WORK PERFORMED BY THE CONTRACTOR:** The Contractor shall perform no less than 51% of the Work, excluding Specialty Items, with its own organization. Specialty Items will be identified on the Bid Form.

CITY OF CUPERTINO

By. Grace Schmidt
City Clerk
To be published in Cupertino Courier on March 13, 2015

END OF DOCUMENT

DOCUMENT 00200

INSTRUCTIONS TO BIDDERS

Bids are requested for a general construction contract, or work described in general, as follows:

2014 SIDEWALK ACCESSIBILITY IMPROVEMENTS

1. **RECEIPT OF BIDS.** Sealed Bids will be received by the City at City's office (see paragraph 2 below) on **April 7, 2014.** City will receive Bids in two separate opaque sealed 10" x 13" envelopes, labeled **Envelope "A"** and **Envelope "B"** each containing the respective items described in paragraphs 4 and 5 below. All Bid envelopes will be time stamped to reflect their submittal time. **Envelope "A" and Envelope "B" shall be due by 2.00 p.m.** as determined by the clock in the office of the City Clerk. Bids will be publicly read at 2:00 p.m. in City Hall Conference Room 100 located at 10300 Torre Avenue. City will reject all Bids received after the specified time and will return such Bids to Bidders unopened. Bidders must submit Bids in accordance with this Document 00200.

2. **CONTACT INFORMATION.**

   Mailing address:
   City of Cupertino
   10300 Torre Avenue
   Cupertino, CA 95014

   City's Authorized Representative:
   Roger Lee
   Assistant Director of Public Works

   Telephone:
   (408) 777-3354

   Emails:
   RogerL@Cupertino.org

   Fax:
   (408) 777-3333

3. **BID SUBMISSION.** Bidder should mark its Bid envelopes as **BID FOR THE CITY, PROJECT NUMBER 2014-15, 2014 SIDEWALK ACCESSIBILITY IMPROVEMENTS,** Envelope "A" or "Envelope "B," as appropriate. Bids shall be deemed to include the written responses of the Bidder to any questions or requests for information of City made as part of Bid evaluation process after submission of Bid. Bidder's failure to submit all required documents strictly as required entitles City to reject the Bid as non-responsive.

4. **CONTENTS OF ENVELOPE "A" - BID PRICE.** Envelope "A" shall include:
   a. Document 00400 (Bid Form) completed in accordance with paragraph 6 of this Document 00200.
   b. Bid security supplied and completed in accordance with paragraph 7 of this Document 00200.
   c. Document 00430 (Subcontractors List) in accordance with paragraph 8 of this Document 00200.
   d. Document 00481 (Non-Collusion Affidavit).

5. **CONTENTS OF ENVELOPE "B" – BIDDER STATEMENT OF QUALIFICATIONS.** Envelope "B" shall include:
   a. Document 00450 (Statement of Qualifications for Construction Work) submitted in accordance with paragraph 9 of this Document 00200.
   b. Document 00482 (Bidder Certifications). Bidder must complete this form as indicated.

6. **REQUIRED BID FORMS.** All Bidders must submit Bids using, where applicable, documents supplied in this Project Manual, including without limitation Document 00400 (Bid Form), Document 00430 (Subcontractors List), Document 00450 (Statement of Qualifications for Construction Work), Document 00481 (Non-Collusion Affidavit), and Document 00482 (Bidders Certifications). City will reject as non-responsive any Bid not submitted on the required forms. Bids must be full and complete. Bidders must complete all Bid items and supply all information required by Bidding Documents. City reserves the right in its sole discretion to reject any Bid as non-responsive as a result of any error or omission in the Bid. Bidders may not modify the Bid Form or qualify their Bids. Bidders must submit clearly and distinctly written Bids. Bidders must clearly make any changes in their Bids by crossing out original entries, entering new entries, and initialing new entries. City reserves the right to reject any Bid not clearly written.

7. **REQUIRED BID SECURITY.** Bidders must submit with their Bids either cash, a cashier's check, or certified check from a responsible bank in the United States, or corporate surety bond furnished by a surety authorized to do business in the State of California, of not less than ten percent of amount of Bid, payable to City. All Bidders choosing to submit a surety bond must submit it on the required form, Document 00411 (Bond Accompanying Bid). City will reject as non-responsive any Bid submitted without the necessary Bid security.

   City may retain Bid securities and Bid bonds of other than the Apparent Low Bidder for a period of 90 Days after award or full execution of the Contract, whichever first occurs. Upon full execution of the Contract, and upon request by Bidder, City will return to the respective unsuccessful Bidders their Bid securities and Bid bonds.

8. **REQUIRED SUBCONTRACTORS LIST.** All Bidders must submit with their Bids the required information on all Subcontractors in Document 00430 (Subcontractors List) for those Subcontractors who will perform any portion of Work, including labor, rendering of service, or specially fabricating and installing a portion of the Work or improvement according to detailed drawings contained in the plans and specifications, in excess of one half of one percent of total Bid or ten thousand dollars ($10,000), whichever is greater. Violation of this requirement may result in Bid being deemed non-responsive and being rejected.

9. **REQUIRED STATEMENT OF QUALIFICATIONS.** In order for a Bidder to be eligible to Bid on this Contract, it must submit a Statement of Qualifications responsive to the requirements identified in Document 00450 (Statement of Qualification for Construction Work) ("SOQ"), including without limitation qualification information for Subcontractors and schedulers, if any. Except as otherwise provided in paragraphs 20 and 21 of this Document 00200 or in Document 00450 (Statement of Qualification for Construction Work), City will make final determinations regarding Bidder responsibility based solely upon the SOQ submitted as part of Envelope "B" on Bid day. Information in the SOQ shall be current.

   No engineering or architectural firm which has provided design services for a project shall be eligible to submit a proposal for the contract to construct the project nor to subcontract for any portion of the work. The ineligible firms include the prime contractor for design, subcontractors of portions of the design and affiliates of either. An affiliate is a firm which is subject to the control of the same persons, through joint ownership or otherwise.

10. **PRE-BID CONFERENCE:** No pre-bid conference will be held.

11. **OTHER REQUIREMENTS PRIOR TO BIDDING.** Submission of Bid signifies Bidder's careful examination of Bidding Documents and complete understanding of the nature, extent, and location of Work to be performed. As a condition to Bidding, Bidder must complete tasks listed in Document 00520 (Contract), Article 5. Submission of Bid shall constitute Bidder's express representation to the City that Bidder has fully completed these tasks.

12. **EXISTING DRAWINGS AND GEOTECHNICAL DATA.** Bidders may examine any available existing conditions information (e.g., record documents, specifications, studies, drawings of previous work) by giving City reasonable advance notice, as well as applicable environmental assessment information (if any) regarding the Project.

13. ADDENDA. Bidders must direct all questions about the meaning or intent of Bidding Documents to City (Attention: Roger Lee, Assistant Director of Public Works) **in writing**. Letters, Faxes or emails are acceptable forms of written questions. Interpretations or clarifications considered necessary by City in response to such questions will be issued by Addenda mailed, faxed, or delivered to all "Bid List" parties, recorded by City as having received a set of Bidding Documents. Addenda will be written and will be issued to each Bidder to the address or fax number supplied City by Bidder. City may not answer questions received less than ten Days prior to the date for opening Bids. Only questions answered by formal written Addenda will be binding. Oral and other interpretations or clarifications will be without legal effect.

a. Addenda may be issued to modify the Bidding Documents as deemed advisable by City.

b. Addenda shall be acknowledged by number with signature in Document 00400 (Bid Form) and shall be part of the Contract Documents. A complete listing of Addenda may be secured from City.

14. SUBSTITUTIONS. Bidders must base their Bids on products and systems specified in Contract Documents or Addenda.

a. Except as provided in paragraph 14.c below, City will consider substitution requests only for "or equal items." Bidders wanting to use "or equal" item(s) may submit Document 00660 (Substitution Request Form) no later than 35 Calendar Days after the due date for City receiving Bids. To assess "or equal" acceptability of product or system, substitution requests shall contain the information required in Document 00660 (Substitution Request Form) and set forth in Document 00700 (General Conditions). Insufficient information will be grounds for rejection of substitution. City shall, within a reasonable period of time after having received a request for substitution, issue in writing its decision as to whether the proposed substitute item is an "equal" item. City's decision shall be conclusive on all Bidders.

b. Approved substitutions shall be listed in Addenda and become part of the Contract Documents.

c. Substitutions may be requested after submitting Bids and the Award of Contract only in accordance with requirements specified in Document 00700 (General Conditions).

d. As further limitation on Bidder's privilege to substitute items, City has found that certain items are designed as City standards and certain items are designed to match existing items in use on a particular public improvement, either completed or in the course of completion. As to such items, City will not permit substitution. City will not permit substitutions for the following items: **NONE IN THIS PROJECT**

15. WAGE RATES. Copies of the general prevailing rates of per diem wages for each craft, classification, or type of worker needed to execute the Contract, as determined by Director of the State of California Department of Industrial Relations, are on file at City's Public Works office or may be obtained of the State of California web site http://www.dir.ca.gov/DLSR/PWD/Northern.html and are deemed included in the Bidding Documents. Upon request, City will make available copies to any interested party. Also, Contractor shall post the applicable prevailing wage rates at the Site.

16. EQUAL EMPLOYMENT OPPORTUNITY. Contractor shall comply with all applicable federal, state, and local laws, rules, and regulations in regard to nondiscrimination in employment because of race, color, ancestry, national origin, religion, sex, marital status, age, medical conditions, disability, or any other reason.

17. BID OPENING. City will open all Bidders' Envelopes "A," at the time and on the date specified in paragraph 1 above, initially evaluate them for responsiveness, and determine an Apparent Low Bidder as specified herein. City will not open Envelopes "B" publicly, and except for the Apparent Low Bidder's Envelope "B" (or as otherwise provided in this Document 00200), they will remain unopened.

18. DETERMINATION OF APPARENT LOW BIDDER (Envelope "A"). Pursuant to Public Contract code Section 20103.8, the following methods shall be used to determine the apparent low bid. Apparent Low Bid will be based solely on the total amount of all Bid items in the Base Bid, if there are not Alternate Bid items. If there are Alternate bid items, the apparent low bidder will be the lowest bid price on the base contract without consideration of the prices on the additive or deductive items. Once the lowest bidder has been identified in the proceeding manner, the City may elect to award the Base Bid item alone or any or all Alternate items in any sequence to the low bidder, even if the resulting contract amount no longer represents the lowest total price for the particular items chosen. All Bidders are required to submit Bids on all Bid items including any and all Alternate items.

19. EVALUATION OF BIDDER RESPONSIBILITY (Envelope "B").

a. City will open Apparent Low Bidder's Envelope "B" and check its contents for compliance with

paragraph 5 above and this paragraph 20. City will notify Apparent Low Bidder in writing of any deficiencies found and will provide Bidder the opportunity to respond in writing with reasonable clarifications but will not allow any changes in the nature of Bidder as a business entity.

b. If any Apparent Low Bidder is determined to be non-responsive or non-responsible, City may open the next Apparent Low Bidder's Envelope "B" pursuant to any procedures determined in its reasonable discretion, and proceed for all purposes as if this Apparent Low Bidder were the original Apparent Low Bidder. City shall use reasonable efforts to make the responsive responsible Apparent Low Bidder's Envelope "B" public on the fifth Day following opening of the Bidders' Envelope "A"s, subject to paragraph 27 below.

c. Document 00450 sets forth certain minimum criteria for a Bidder to be found responsible. Bidder's attention is called to the following minimum requirements for a Bidder to be found responsible to perform the Work:

1) Sufficient financial strength, stability and resources as measured by Bidder's equity, debt-to-assets ratio, and capability to finance the Work to be performed.

2) Ability to secure, in accordance with the Contract Documents, the required forms of Construction Performance Bond and Construction Labor and Material Payment Bond. Ability to obtain required insurance with coverage values that meet minimum requirements.

3) Subcontracting Prior Experience. Satisfactory experience on public works, including without limitation no history of default termination, excessively delayed completion or excessive defective work.

4) Projects Public Experience. Evidence that Bidder and its team, including without limitation its Subcontractors (hereafter, including Bidder if Bidder performs such Work itself, "designated Subcontractor(s)"), have the human and physical resources of sufficient quantity and quality to perform the Work under Contract Documents in a timely and Specification-compliant manner, to include:

i. Construction and management organizations with sufficient personnel and requisite disciplines, licenses, skills, experience, and equipment for the Project.

ii. Minimum licensing requirements including evidence of a valid California contractor's license as specified for the Bidder and evidence of requisite licenses for Key Personnel of Bidder or any designated Subcontractor(s).

iii. Sufficiency of proposed quality assurance plan to meet the requirements of the Contract Documents.

iv. Bidder's safety record.

v. Minimum experience requirements of the prime contractor including the completion of a suitable number of projects of similar nature and complexity for contract dollar amounts equal to what is specified in Document 00450 (Statement of Qualification).

vi. A field organization with skills, experience, and equipment sufficient to perform all on-Site work and necessary scheduling.

vii. Expertise of Key Personnel to accomplish the duties and responsibilities required to perform the Work under the Contract Documents. Minimum experience requirements of Key Personnel including the completion of projects of similar nature and complexity and having the number of years of experience on projects of similar nature and complexity as specified in Document 00450 (Statement of Qualifications).

Bidder shall expressly indicate which, if any, of the designated Subcontractor(s)' functions it will perform itself.

5) The following are general requirements for the designated Subcontractor(s) to be found responsible to perform the Work. (Unless the designated Subcontractor(s) is found responsible, Bidder will be found non-responsible.) See specific requirements in Document 00450.

i. Evidence that Bidder's named Subcontractor has the human and physical resources of sufficient quantity and quality to perform those aspects of the Contract in a timely and Specification-compliant manner.

ii. Construction and management organizations with sufficient personnel and requisite disciplines, licenses, skills, experience, and equipment for the Project.

iii. A field organization with skills, experience, and equipment sufficient to perform all on-Site work and necessary scheduling.

iv. Installation of a minimum number of projects over a period of several years for projects similar in nature and complexity to this Project.

v. The installation supervisor shall have worked in a similar capacity on a number of projects similar in nature and complexity to this Project.

20. BID EVALUATION. City may reject any or all Bids and waive any informalities or minor irregularities in the Bids. City also reserves the right, in its discretion, to reject any or all Bids and to re-Bid the Project. City reserves the right to reject any or all nonconforming, non-responsive, unbalanced, or conditional Bids, and to reject the Bid of any Bidder if City believes that it would not be in the best interest of Project to make an award to that Bidder, whether because the Bid is not responsive or the Bidder is unqualified or of doubtful financial ability or fails to meet any other pertinent standard or criteria established by City. For purposes of this paragraph, an "unbalanced Bid" is one having nominal prices for some work items and enhanced prices for other work items.

a. In evaluating Bids, City will consider Bidders' qualifications, whether or not the Bids comply with the prescribed requirements, unit prices and other data, as may be requested in Document 00400 (Bid Form) or prior to the Notice of Award.

b. City may conduct reasonable investigations and reference checks of Bidder, proposed Subcontractors, suppliers and other persons and organizations as City deems necessary to assist in the evaluation of any Bid and to establish Bidder's responsibility, qualifications, financial ability, proposed Subcontractors, suppliers, and other persons and organizations to perform and furnish the Work in accordance with the Contract Documents to City's satisfaction within the prescribed time. Submission of a Bid constitutes Bidder's consent to the foregoing. City shall have the right to consider information provided by sources other than Bidder. City shall also have the right to communicate directly with Bidder's surety regarding Bidder's bonds.

c. Discrepancies between the multiplication of units of Work and unit prices will be resolved in favor of the unit prices. Discrepancies between the indicated sum of any column of figures and the correct sum thereof will be resolved in favor of the correct sum. Discrepancies between written words and figures will be resolved in favor of the words.

d. Quantities stated in the Bidding Documents are approximate only and are subject to correction upon final measurement of the Work, and are subject further to the rights reserved by the City to increase or diminish the amount of work under any classification as advantages to design or construction needs require.

e. City may determine whether a Bidder is qualified in its sole discretionary judgment.

f. If identical apparent lowest bids are received the City may award the contract in accordance with Section 20166 of the Public Contract code

g. **Required Contractor and Subcontractor Registration [Applies if Bid is submitted on or after March 1, 2015 or if Contract is awarded on or after April 1 2015].**

1) Owner shall accept Bids only from Bidders that (along with all Subcontractors listed in Document 00430, Subcontractors List) are currently registered and qualified to perform public work pursuant to Labor Code Section 1725.5.

2) Subject to Labor Code Sections 1771.1(c) and (d), any Bid not complying with paragraph 20g above, shall be returned and not considered; provided that if Bidder is a joint venture (Business & Professions Code Section 7029.1) or if federal funds are involved in the Contract (Labor Code Section 1771.1(a)), Owner may accept a non-complying Bid provided that Bidder and all listed Subcontractors are registered at the time of Contract award.

21. AWARD. If the Contract is to be awarded, it will be awarded to the lowest responsible responsive Bidder. Following completion of all required City procedures and receipt of all City approvals, City will issue Document 00510 (Notice of Award) to successful Bidder. If two (2) or more bids are the same and found to be the lowest responsible responsive bidder, the City may accept either bid it chooses in its sole discretion.

22. BID PROTEST. Any Bid protest must be submitted in writing to the City's offices (Attention: Roger Lee), before 3:30 p.m. of the third Calendar Day following opening of Bidders' Envelope "A"s.

a. The initial protest document must contain a complete statement of the basis for the protest.

b. The protest must refer to the specific portion of the document that forms the basis for the protest.

c. The protest must include the name, address, and telephone number of the person representing the protesting party.

d. Only Bidders who the City otherwise determines are responsive and responsible are eligible to protest a Bid; protests from any other Bidder will not be considered. In order to determine whether a protesting

Bidder is responsive and responsible, City will open and evaluate information contained in any protesting Bidder's Envelope "B", and conduct the same investigation and evaluation as City is entitled to take regarding an Apparent Low Bidder. Any such opened Envelope "B" shall also be subject to all provisions of paragraph 27.

e. The party filing the protest must concurrently transmit a copy of the initial protest document and any attached documentation to all other parties with a direct financial interest that may be adversely affected by the outcome of the protest. Such parties shall include all other Bidders who appear to have a reasonable prospect of receiving an award depending upon the outcome of the protest.

f. The procedure and time limits set forth in this paragraph are mandatory and are Bidder's sole and exclusive remedy in the event of Bid protest. Bidder's failure to comply with these procedures shall constitute a waiver of any right to further pursue the Bid protest, including filing a Government Code Claim or legal proceedings. A Bidder may not rely on a protest submitted by another Bidder, but must timely pursue its own protest.

23. POST-NOTICE OF AWARD REQUIREMENTS. After Notice of Award, the successful Bidder must execute and submit the following documents as indicated below.

a. Submit the following documents to City by 5:00 p.m. of the 10th Calendar Day following Notice of Award. Execution of Contract by City depends upon approval of these documents:

1) Document 00520 (Contract): To be executed by successful Bidder. Submit four originals, each bearing an original signature.

2) Document 00610 (Construction Performance Bond): To be executed by successful Bidder and surety, in the amount set forth in Document 00610 (Construction Performance Bond). Submit one original.

3) Document 00620 (Construction Labor and Material Payment Bond): To be executed by successful Bidder and surety, in the amount set forth in Document 00620 (Construction Labor and Material Payment Bond). Submit one original.

4) Insurance certificates and endorsements required by Document 00700 (General Conditions). Submit one original set.

5) The Guaranty in the form set forth in Document 00630 (Guaranty). Submit four originals, each bearing an original signature.

b. City shall have the right to communicate directly with Apparent Low Bidder's proposed performance bond surety, to confirm the performance bond. City may elect to extend the time to receive faithful performance and labor and material payment bonds.

c. Successful Bidder's failure to submit the documents required herein, in a proper and timely manner, entitles City to rescind its award, and to cause Bidder's Bid security to be forfeited as provided herein.

24. FAILURE TO EXECUTE AND DELIVER DOCUMENTS. If Bidder, to whom Contract is awarded shall, within the period described in paragraph 23a of this Document 00200, fail or neglect to execute and deliver all required Contract Documents and file all required bonds, insurance certificates, and other documents, City may, in its sole discretion, foreclose on Bidder's deposit surety bond, or deposit Bidder's cashier's check or certified check for collection, and retain the proceeds thereof as liquidated damages for Bidder's failure to enter into the Contract Documents. Bidder agrees that calculating the damages City may suffer as a result of Bidder's failure to execute and deliver all required Contract Documents would be extremely difficult and impractical and that the amount of Bidder's required Bid security shall be the agreed and presumed amount of City's damages. In addition, upon such failure City may determine the next Apparent Low Bidder and proceed accordingly.

25. MODIFICATION OF COMMENCEMENT OF WORK. City expressly reserves the right to modify the date for the Commencement of Work under the Contract and to independently perform and complete work related to the Project. City accepts no responsibility to Contractor for any delays attributed to its need to complete independent work at the Site.

26. WITHDRAWAL OF BIDS. Bidders may withdraw their Bids at any time prior to the Bid opening time fixed in this Document 00200, only by written request for the withdrawal of Bid filed with the City at the City's office. Bidder or its duly authorized representative shall execute request to withdraw Bid. The submission of a Bid does not commit the City to award a contract for the Project, to pay costs incurred in the preparation of a Bid, or to procure or contract for any goods or services.

27. PUBLIC RECORDS ACT REQUESTS.

a. Per the Public Records Act, City will make available to the public, Bidder's SOQ (if Bidder's Envelope "B" is opened), all correspondence and written questions submitted during the Bid period, all Bid submissions opened in accordance with the procedures of this Document 00200, and all subsequent Bid evaluation information. All submissions not opened will remain sealed and will eventually be returned to the submitter.

b. Upon a request for records regarding this Bid, City will notify Bidder involved within ten Days from receipt of the request of a specific time when the records will be made available for inspection. City will make such information available to the extent required by applicable law, without restriction.

c. Information disclosed in the SOQ (if Envelope "B" is opened) and the attendant submissions are the property of City

28. CONFORMED CONSTRUCTION DOCUMENTS. Following Award of Contract, City may prepare a conformed set of Contract Documents reflecting Addenda issued during bidding, which will, failing objection, constitute the approved set of Contract Documents.

29. DEFINITIONS. All abbreviations and definitions of terms used in this Document 00200 are set forth in Section 00700.

END OF DOCUMENT

DOCUMENT 00210

INDEMNITY AND RELEASE AGREEMENT

Dated _____

POTENTIAL BIDDER: _____

CITY: THE CITY OF CUPERTINO

SITE: 10300 Torre Avenue

PROJECT: **2015 SIDEWALK ACCESSIBILITY IMPROVEMENTS**

In consideration of the above-referenced City's permitting the undersigned potential bidder ("Bidder") to have access to, and to conduct investigations, tests and/or inspections on, the Site, Bidder hereby agrees as follows:

1. To the greatest extent permitted by law, Bidder hereby releases, and shall defend, indemnify and hold harmless City, and its officers, employees, consultants (including without limitation Consulting Engineer), representatives, and agents, and all other parties having any other interest in the Site, against any claim or liability, including attorney's fees, arising from or relating to any Site-related access, investigation, test, inspection and/or other activity conducted by Bidder or any of Bidder's officers, employees, consultants, representatives, and/or agents, regardless of whether claim or liability is caused in part by the negligence of City or by any released and indemnified party.

2. Bidder hereby waives the provisions of California Civil Code Section 1542 which provides as follows:

   A general release does not extend to claims that the creditor does not know or suspect to exist in his favor at the time of executing the release, which if known by him, must have materially affected his settlement with the debtor.

3. Bidder shall repair any damage to the Site or adjacent property resulting from activities authorized hereunder.

4. Attached hereto (or to be delivered separately before Bidder's visit to the Site) is a certificate for comprehensive general liability insurance satisfying the requirements of Document 00700 (General Conditions).

5. Although this Indemnity and Release Agreement is not a Contract Document (see Document 00520 Contract), it shall be fully effective and binding regardless of whether Bidder submits a Bid for the subject Project, is awarded a contract for the Project, or otherwise.

_____
Name of Bidder

By: _____
Signature

Its: _____
Title (If Corporation: Chairman, President or Vice President)

By: _____
Signature

Its: _____
Title (If Corporation: Secretary, Assistant Secretary, Chief Financial Officer or Assistant Treasurer)

DOCUMENT 00400

BID FORM

To be submitted as part of Envelope "A" by the time and date specified in Document 00200 (Instructions to Bidders).

TO THE HONORABLE CITY COUNCIL OF THE CITY OF CUPERTINO

THIS BID IS SUBMITTED BY:

_____

(Firm/Company Name)

Re: PROJECT NUMBER 2014-15
2014 Sidewalk Accessibility Improvements

1. The undersigned Bidder proposes and agrees, if this Bid is accepted, to enter into a contract with the City of Cupertino ("City") in the form included in the Contract Documents, Document 00520 (Contract), to perform and furnish all Work as specified or indicated in the Contract Documents for the Contract Sum and within the Contract Time indicated in this Bid and in accordance with all other terms and conditions of the Contract Documents. All portions of this Bid Form must be completed and signed before the bid is submitted. Failure to do so will result in the bid being rejected as non-responsive.

2. Bidder accepts all of the terms and conditions of the Contract Documents, Document 00100 (Advertisement for Bids), and Document 00200 (Instructions to Bidders), including, without limitation, those dealing with the disposition of Bid Security. This Bid will remain subject to acceptance for 90 Days after the day of Bid opening.

3. Bidder has visited the Site and performed all tasks, research, investigation, reviews, examinations, and analysis and given notices, regarding the Project and the Site, as set forth in Document 00520 (Contract), Article 5.

4. Bidder has given City prompt written notice of all conflicts, errors, ambiguities, or discrepancies that it has discovered in or among the Contract Documents and as-built drawings and actual conditions and the written resolution thereof through Addenda issued by City is acceptable to Contractor.

5. Subcontractors for work included in all Bid items, in accordance with the criteria in the Public Contract Code, are listed on the attached Document 00430 (Subcontractors List).

6. The undersigned Bidder understands that City reserves the right to reject this Bid.

7. If written notice of the acceptance of this Bid, hereinafter referred to as Notice of Award, is mailed or delivered to the undersigned Bidder within the time described in paragraph 2 of this Document 00400 or at any other time thereafter before it is withdrawn, the undersigned Bidder will execute and deliver the documents required by Document 00200 (Instructions to Bidders) within the times specified therein. These documents include, but are not limited to, Document 00520 (Contract), Document 00610 (Construction Performance Bond), and Document 00620 (Construction Labor and Material Payment Bond).

8. Notice of Award or request for additional information may be addressed to the undersigned Bidder at the address set forth below on the signature page.

10. The undersigned Bidder herewith encloses cash, a cashier's check, or certified check of or on a responsible bank in the United States, or a corporate surety bond furnished by a surety authorized to do a surety business in the State of California, in form specified in Document 00200 (Instructions to Bidders), in the amount of ten percent (10%) of the total of Bid and made payable to the "City of Cupertino".

11. The undersigned Bidder agrees to commence Work under the Contract Documents on the date established in Document 00700 (General Conditions) and to complete all work within the time specified in Document 00520 (Contract). The undersigned Bidder acknowledges that City has reserved the right to delay or modify the commencement date. The undersigned Bidder further acknowledges City has reserved the right to perform independent work at the Site, the extent of such work may not be determined until after the opening of the Bids, and that the undersigned Bidder will be required to cooperate with such other work in accordance with the requirements of the Contract Documents.

12. The undersigned Bidder agrees that, in accordance with Document 00700 (General Conditions), liquidated damages for failure to complete all Work in the Contract within the time specified in Document 00520 (Contract) shall be as set forth in Document 00520 (Contract).

SCHEDULE OF BID PRICES

All Bid items, including lump sums and unit prices, must be filled in completely. Quote in figures only, unless words are specifically requested.

Specialty Items are identified on the Bid Form in the description.

ITEM	DESCRIPTION	UNIT	EST QTY	UNIT PRICE	TOTAL
A.	OVER ONE (1) CU. YD. CONC. TO SIX (6) CU. YD. (81-486 S.F. 4" sdwlk, 18-108 L.F. std. Curb & Gutter)				
	1. Remove and Replace 4" Sidewalk (1-19)	S.F.	1250		
	2.1 Driveway Detail – Detached Sidewalk (1-20)	S.F.	750		
	2.2 Driveway Detail – Monolithic Sidewalk (1-21)	S.F.	500		
	3. Remove and Replace Curb & Gutter (1-16 Type A2-6)	L.F.	1300		
	4. Remove and Replace Rolled Curb & Gutter (1-16 Type E)	L.F.	500		
B.	OVER SIX CU. YD. CONC.				
	1. Remove and Replace 4" Sidewalk (1-19)	S.F.	4500		
	2.1 Driveway Detail – Detached Sidewalk (1-20)	S.F.	2500		
	2.2 Driveway Detail – Monolithic Sidewalk (1-21)	S.F.	2000		
	3. Remove and Replace Curb & Gutter (1-16 Type A2-6)	L.F.	4500		
	4. Remove and Replace Rolled Curb & Gutter (1-16, Type E)	L.F.	1800		
C.	ALL CATEGORIES AND LOCATIONS				
	1. Remove Park Strip Improvements	S.F.	2750		
	2. Remove Median Island Flatwork	S.F.	0		
	3. Valley Gutter (1-18)	S.F.	200		
	4. Depressed Curb Ramps (Caltrans Detail A88A)				
	4A. Depressed Curb Ramps (CASE A)	EA	50		
	4B Depressed Curb Ramps (Case B)	**EA**	**50**		
	4C Depressed Curb Ramps (Case C)	EA	40		
	4D Depressed Curb Ramps (Case D)	EA	10		
	4E. Depressed Curb Ramps (Case E)	EA	2		
	4F Depressed Curb Ramps (Case F)	EA	5		
	4G Depressed Curb Ramps (Case G)	EA	2		
	5. Upgrade Existing Curb Ramps	EA	30		
	6. Retaining Curb (outside of ramp border grooves)	LF	750		

ITEM	DESCRIPTION	UNIT	EST QTY	UNIT PRICE	TOTAL
	7. Root Barrier	LF	45		
	9. Median Island Curb	L.F.	0		
	9. Reconstruction of Catch Basin Top	EA	3		
	10. Asphalt Replacement (6" Placement)	TN	100		
				TOTAL	

Total Bid Price: _____

(Words)

Unit Legend

LS = Lump Sum
EA = Each
LF = Linear Feet
TON = Ton or 2,000 Pounds
CY = Cubic Yards
LB = Pounds
AL = Allowance
SF = Square Feet

ACKNOWLEDGEMENT OF RECEIPT OF ADDENDUMS

Bidder herby acknowledges receipt and examination of all Contract Documents and the following Addenda:

Addendum No.	Addendum Date

Bidder proposes and agrees to fully perform the Work within the time stated and in strict accordance with the Contract Documents for the sums of money listed in this Bid Form.

NAME OF BIDDER: _____

licensed in accordance with an act for the registration of Contractors, and with license number: _____
Expiration Date: _____.

_____ _____
Where incorporated, if applicable

_____

_____
Principals

I certify (or declare) under penalty of perjury under the laws of the State of California that the foregoing is true and correct.

_____
Signature of Bidder

NOTE: If Bidder is a corporation, set forth the legal name of the corporation, state where incorporated, together with the signature of the officer or officers authorized to sign contracts on behalf of the corporation. If Bidder is a partnership, set forth the name of the firm together with the signature of the partner or partners authorized to sign contracts on behalf of the partnership.

Business Address: _____
_____
_____

Officers authorized to sign contracts: _____
_____
_____
Typed Full Name:

Telephone Number(s): _____

Fax Number(s): _____

E-Mail Address: _____

END OF DOCUMENT

DOCUMENT 00411

BOND ACCOMPANYING BID

KNOW ALL BY THESE PRESENTS:

That the undersigned _____ as Principal, and the undersigned as Surety, are held and firmly bound unto the CITY OF CUPERTINO, a Municipal Corporation of the State of California ("City"), as obligee, in the penal sum of _____ Dollars **($_____)** lawful money of the United States of America being at least ten percent (10%) of the aggregate amount of said Principal _____'s base Bid, for the payment of which, well and truly to be made, we bind ourselves, our successors, executors, administrators, and assigns, jointly and severally, firmly by these presents.

WHEREAS, the said Principal is submitting a Bid for City Project Number 2014-15,

2014 SIDEWALK ACCESSIBILITY IMPROVEMENTS

THE CONDITION OF THIS OBLIGATION IS SUCH that if the Bid submitted by the said Principal be accepted and the Contract be awarded to said Principal and said Principal shall within the required periods enter into the Contract so awarded and provide the required Construction Performance Bond, Construction Labor and Material Payment Bond, insurance certificates, and all other endorsements, forms, and documents required under Document 00200 (Instructions to Bidders), then this obligation shall be void, otherwise to remain in full force and effect.

IN WITNESS WHEREOF, the above bounden parties have executed this instrument this _____ day of _____, 2015.

(Corporate Seal)

By

_____
Principal

_____
Surety

(Corporate Seal)

By

_____
Attorney in Fact

END OF DOCUMENT

DOCUMENT 00430

REQUIRED SUBCONTRACTORS LIST

Bidder must provide the following Listed Subcontractor information in conformance with the California Public Contract Code where the value of the Subcontractor's work is or exceeds ½ of one percent (.05%) of the Base Bid or ten thousand dollars ($10,000), whichever is greater, on Document 00400. Failure to do so will render Bid Non Responsive.

Bidder is reminded that Listed Subcontractors cannot be substituted by the Apparent Low Bidder after Bid has been submitted and opened, without City's formal approval.

Name of Subcontractor and Location of Place of Business	Description of Work	Subcontractor's License No.	DIR Registration Number

Attach additional sheets if necessary

NOTICE:

Required Contractor and Subcontractor Registration ***[Applies if Bid is submitted on or after March 1, 2015 or if Contract is awarded on or after April 1, 2015]***

1) Owner shall accept Bids only from Bidders that (along with all Subcontractors listed in Document 00430, Subcontractors List) are currently registered and qualified to perform public work pursuant to Labor Code Section 1725.5.

2) Subject to Labor Code Sections 1771.1(c) and (d), any Bid not complying with paragraph above, shall be returned and not considered; provided that if Bidder is a joint venture (Business & Professions Code Section 7029.1) or if federal funds are involved in the Contract (Labor Code Section 1771.1(a)), Owner may accept a non-complying Bid provided that Bidder and all listed Subcontractors are registered at the time of Contract award.

END OF DOCUMENT

DOCUMENT 00450

STATEMENT OF QUALIFICATIONS

FOR

2014 SIDEWALK ACCESSIBILITY IMPROVEMENTS

Bidder's Full Corporate Name: _____

Bidder's Legal Structure

- _____ Sole Proprietor
- _____ Partnership
- _____ Non-Profit 501 C3
- _____ Corporation
- _____Other, please explain_____

Bidder's Federal I.D. Number_____

Bidder's Mailing Address_____

Bidder's Street Address_____

Owner of Bidder's Company _____

Bidder's Contact Person _____

Bidder's Address _____

Bidder's Phone _____, Fax _____, Email_____

(Bidder shall identify each partner and / or member of the Joint Venture, and their roles and responsibilities, if a Joint Venture is proposed.)

INSTRUCTIONS FOR THE SUBMITTAL OF THE STATEMENT OF QUALIFICATIONS

- Place the Statement of Qualifications Document, with all required materials, in a separate envelope labeled "**Envelope B", "STATEMENT OF QUALIFICATIONS" (SOQ)** with the project title and Contractors name and address. **Do Not place the SOQ in the same envelope as the Bid Proposal. The envelope will not be opened if only one is received, it will be returned to the Contractor.**
- Submittal of the Statement of Qualifications envelope is required at the same time as the Bid Proposal. The Bid Proposal, Envelope "A", will not be opened if the Statement of Qualifications, Envelope B, is not received on time.
- The City will open only Bid Proposals, Envelope "A", at the public bid opening. The Statement of Qualifications, Envelope "B", of the apparent low bidder, will be opened by the City to check its contents for compliance with the requirements. City will notify Apparent Low Bidder of any deficiencies found and will provide Bidder the opportunity to respond in writing with reasonable clarifications but will not allow any changes in the nature of Bidder as a business entity.
- If the Apparent Low Bidder is determined to be non-responsive or non-responsible, City may open the next Apparent Low Bidder's Statement of Qualification, Envelope B, pursuant to any procedures determined in its reasonable discretion, and proceed for all intents and purposes, as if the next Apparent Low Bidder were the original Apparent Low Bidder. City shall use reasonable efforts to make the responsive responsible Apparent Low Bidder's Statement of Qualifications public by the fifth day following opening of the Bid Proposals.

GENERAL BIDDER EXPERIENCE

Any explanation requested by a Bidder regarding the meaning or interpretation of this Document must be requested in writing and with sufficient time allowed for a reply to reach Bidder before the submission of its SOQ. Oral explanations or instructions will not be binding. Any information provided to any prospective Bidder concerning this Document will be furnished to all prospective Bidders as an Addendum to the Bidding Documents.

Except as set forth herein, all abbreviations and definitions of terms used in this Document 00450 are as set forth in Document 00700 (General Conditions).

Bidders shall complete the entire Statement of Qualification. Failure to complete the questionnaire or the inclusion of any false statement(s) shall be grounds for immediate disqualification.

The SOQ shall be clear and concise to enable management-oriented personnel to make a thorough evaluation and arrive at a sound determination as to whether the SOQ meets City's requirements. To this end, the SOQ should be so specific, detailed and complete as to demonstrate clearly and fully that the Bidder has a thorough understanding of and has demonstrated knowledge of the requirements to perform the Work (or applicable portion thereof).

Bidder's compliance with the minimum qualification requirements of this Document, will also be measured by the experience of the supervisory personnel who will have responsible charge of the various major components of the Work.

If Bidder subcontracts portions of the Work, City, in its determination of whether the minimum qualification requirements have been met, will consider the qualifications of the Subcontractor's supervisory personnel.

The Contract will require Bidder to construct the Project, all in accordance with the scope of Work set forth in the Contract. City will accept Bids only from Bidders duly licensed in accordance with the California Business & Professions Code. Additionally, Bidder must meet the following general requirements, at a minimum, in order to be considered by City to be qualified for award of the Contract:

Per the Public Records Act, City will make available to the public, Bidder's Statement of Qualifications all correspondence and written questions submitted with the Bid. All submissions not opened will remain sealed and eventually be returned to the submitter. Except as otherwise required by law, City will not disclose trade secrets or proprietary financial information submitted that has been designated confidential by Bidder (including but not limited to the Statement of Qualifications). Any such trade secrets or proprietary financial information that a Bidder believes should be exempted from disclosure shall be specifically identified and marked as such. Blanket-type identification by designating whole pages or sections shall not be permitted and shall be invalid. The specific information must be clearly identified as such.

Upon a request for records regarding this Bid, City will notify Bidder involved within ten Days from receipt of the request of a specific time when the records will be made available for inspection. If the Bidder timely identifies any "proprietary, trade secret, or confidential commercial or financial" information that Bidder determines is not subject to public disclosure, and requests City to refuse to comply with the records request, Bidder shall take all appropriate legal action and defend City's refusal to produce the information in all forums; otherwise, City will make such information available to the extent required by applicable law, without restriction.

Information disclosed in the Statement of Qualifications and the attendant submissions are the property of City unless Bidder makes specific reference to data that is considered proprietary. Subject to the requirements in the Public Records Act, reasonable efforts will be made to prevent the disclosure of information except on a need-to-know basis during the evaluation process.

PART A
BIDDER'S GENERAL QUALIFICATIONS

1. Does Bidder have at least five years of experience as a continuously operating entity engaged in the performance of similar work? Yes_____ No_____

2. Has Bidder, within the past three years, completed three projects, of similar nature and complexity, with a contract amount of at least $800,000.00 each? Yes_____ No_____

3. Does Bidder possess a valid and current California Class A or C-8 Contractor's License for the work proposed? Yes_____ No_____

4. Does Bidder have a minimum of $4,000,000 in the aggregate liability insurance coverage? Yes_____ No_____

5. Has Bidder's Contractor's license been revoked at any time in the last five years? Yes_____ No_____

6. Has Bidder been "default terminated" by an owner (i.e. not for convenience), or has a Surety completed a contract for Bidder within the last five years? Yes_____ No_____

7. Has Bidder had, within the last four years prior to the date of bid opening, any outstanding convictions or enforcement agency findings for failure to pay prevailing wages in the State of California? Yes_____ No_____

8. Has Bidder been determined to have violated any environmental or safety laws giving rise to civil or criminal penalties in excess of $50,000 for each violation during the last four years while performing contracting duties of the type specified for the contract within the State of California? Or has bidder had more than four civil penalties of $50,000 or less during the last four years while performing contracting duties of the type specified for the contract within the State of California? Yes_____ No_____

9. Has Bidder been convicted of violating a state or federal law respecting the employment of undocumented aliens within the preceding five years from the date of bid opening? Yes_____ No_____

Bidder will be immediately disqualified if any answer to questions 1, 2, 3, or 4 is No.
Bidder will be immediately disqualified if any answer to questions 5, 6, 7, 8, or 9 is Yes.

PART B
BIDDER'S SAFETY, PREVAILING WAGE, LICENSES, DISPUTES, BONDS AND INSURANCE

SAFETY
The following statements as to safety experience of Bidder are submitted with Bid, as part thereof, and Bidder guarantees the truthfulness and accuracy of the information.

1. Has Cal/OSHA, Federal OSHA, the EPA or any Air Quality Management District cited Bidder in the past five years? Yes _____No _____ If yes, attach description of each citation.

2. How often does Bidder require documented safety meetings be held for:

• Field Supervisor	Weekly ____	Biweekly ____	Monthly ____	Less than monthly ____
• Employees	Weekly ____	Bi-weekly ____	Monthly ____	Less than monthly ____
• New Hires	Weekly ____	Bi-weekly ____	Monthly ____	Less than monthly ____
• Subcontractors	Weekly ____	Bi-weekly ____	Monthly ____	Less than monthly ____

3. How often does Bidder conduct documented safety inspections? Quarterly _____, Semi-annually _____, Annually____, Other_____

4. Does Bidder have home office safety representatives who visit/audit the job site? Quarterly____, Semi-annually____, Annually _____, Other_____

5. What is Bidder's Interstate Experience Modification Rate? _____. (A rating in excess of 1 may constitute grounds for disqualification as non-responsible.)

6. List Bidder's Interstate Experience Modification Rate for the three calendar years listed below.
   - 2010:_____
   - 2011:_____
   - 2012:_____

7. Use Bidder's last year's Cal/OSHA log to fill in the following:
   - Number of lost workday cases _____
   - Number of medical treatment cases _____
   - Number of fatalities _____
   - Employee hours worked last year _____

8. State the name of Bidder's safety engineer/manager or Site Safety Officer
   ._____

PREVAILING WAGE PROVISIONS

Has Bidder been fined, penalized or otherwise found to have violated any prevailing wage or labor code provision? If yes, attach description of each occurrence.

Yes_____ No_____
Description:_____
_____

LICENSE PROVISIONS

Has Bidder changed names or license numbers in the past seven years? If so, please state reason for change.

Yes_____No_____Reason:_____

_____

_____

DISPUTES

Has Bidder had any claims, litigation, or disputes ending in mediation or arbitration, or termination for cause associated with any project in the past seven years? If yes, attach description of each such instance including details of total claim amount, settlement amount, and owner's name and phone number.

Yes_____ No_____

BONDS

Provide information regarding the required Performance and Payment Bonds from a surety duly licensed to do business in the State of California, having a financial rating from A. M. Best Company of **B+, Class 7** or better or that is otherwise acceptable to the City. The surety will agree to provide Bidder with the required performance and payment bonds in accordance with the requirements set forth in Documents 00610 (Construction Performance Bond) and 00620 (Construction Labor and Material Payment Bond). Such performance and payment bonds shall be in the minimum penal sums provided therein.

Bonding Capacity - Provide the following required information: **Fill out this form completely**

Name of bonding company/surety: _____

Name of Surety Agent: _____

Surety Agent address: _____

Surety Agent phone number: _____

Is surety a California-admitted surety? Yes _____ No _____

Is surety listed in the current edition of the California Department of the Treasury's Listing of approved sureties? Yes _____ No _____

List surety's A.M. Best Rating: _____

What is Bidder's total bonding capacity? _____

What percentage rate does Bidder pay for bonds? _____

INSURANCE

Demonstrate Ability to Provide Required Insurance. Bidder shall provide a letter from an insurance underwriter(s), having a financial rating from A. M. Best Company of **A, Class 7** or better or that is otherwise acceptable to the City, confirming that the insurer will provide Bidder the required coverages and amounts specified in Document 00700 (General Conditions).

Insurance verification – provide the following required information: **Fill out this form completely.**

Workers' Compensation:

Carrier: _____

Address: _____

Phone and Fax: _____

Policy Number: _____

Policy Limits: $ _____

Coverage Amount: Per Occurrence: $_____ A.M. Best Rating: _____

General Liability:

Carrier: _____

Address: _____

Phone and Fax: _____

Policy Number: _____

Policy Limits: $ _____

A.M. Best Rating: _____

Coverage Amount: Per Occurrence: _____ Per Aggregate: _____

Excess Liability: If Contractor has any

Carrier: _____

Address: _____

Phone and Fax: _____

Policy Number: _____

Policy Limits: $ _____

A.M. Best Rating: _____

Coverage Amount Per Occurrence: _____

Automotive Liability:

Carrier: _____

Address: _____

Phone and Fax: _____

Policy Number: _____

Policy Limits: $ _____

A.M. Best Rating: _____

Coverage Amount Per Occurrence: _____

If Bidder has had the general liability carrier identified in this Document (Bidder Registration and Safety Experience Form) for less than 5 years, please provide additional information below for balance of the past 5 years

Agency Name: _____

Contact Name: _____

Phone Number: _____

Carrier: _____ A.M. Best Rating _____

Carrier: _____ A.M. Best Rating _____

Carrier: _____ A.M. Best Rating _____

Has Bidder ever had insurance terminated by a carrier? Yes _____ No _____

If yes, explain on separate signed sheet marked with correlating cross-reference to this paragraph of the questionnaire.

PART C
DETAILED BIDDER EXPERIENCE

The nature of this Project requires prior similar experience by the firm and the Key Personnel assigned. Contractor must have completed, within the last seven years, at least three contracts with a value of $200,000 or more.

Summarize similar project experience below and provide the detailed project information requested:

Project No. 1, of similar nature and complexity, at or above $ 800,000 in construction cost.

Project name	Construction Cost ($)	Year completed

Location:_____

Owner name and phone no:_____

Engineer of Record name and phone no:_____

Owner's Const. Mgr. or Project Mgr. (name and phone number):_____

Work Performed:_____

Total Construction Cost:_____

Project No. 2, of similar nature and complexity, at or above $800,000 in construction cost.

Project name	Construction Cost ($)	Year completed

Location:_____

Owner name and phone no:_____

Engineer of Record name and phone no:_____

Owner's Const. Mgr. or Project Mgr. (name and phone number):_____

Work Performed:_____

Total Construction Cost:_____

Project No. 3, of similar nature and complexity, at or above $ 800,000 in construction cost.

Project name	Construction Cost ($)	Year completed

Location:_____

Owner name and phone no:_____

Engineer of Record name and phone no:_____

Owner's Const. Mgr. or Project Mgr. (name and phone number):_____

Work Performed:_____

Total Construction Cost:_____

BIDDER'S PROPOSED KEY PERSONNEL

Bidder shall provide specific information, as listed below, for each named Key Personnel of Bidder.

Project Manager: _____

Years of Employment with Bidder's Firm: _____

Years of experience _____

Education – degrees obtained, schools and years _____

Professional registration_____

Two client reference names and phone nos:_____

Project Superintendent: _____

Years of Employment with Bidder's Firm: _____

Years of experience_____

Education – degrees obtained, schools and years_____

Professional registration_____

Two client reference names and phone nos:_____

PART D
BIDDER REGISTRATION

BIDDER CERTIFIES, UNDER PENALTY OF PERJURY, THAT THE FOREGOING INFORMATION IN THIS DOCUMENT 00450 IS CURRENT AND ACCURATE AND AUTHORIZES THE CITY OF CUPERTINO AND ITS AGENTS AND REPRESENTATIVES TO OBTAIN A CREDIT REPORT AND/OR VERIFY ANY OF THE ABOVE INFORMATION.

_____
printed name

_____
signature

_____
date

END OF DOCUMENT

DOCUMENT 00481

NON-COLLUSION AFFIDAVIT
PUBLIC CONTRACT CODE §7106

NON-COLLUSION AFFIDAVIT TO BE EXECUTED BY BIDDER AND SUBMITTED WITH BID

STATE OF CALIFORNIA)
) ss.
COUNTY OF _____)

_____, being first duly sworn, deposes and says that he or she is _____ **[Office of Affiant]** of _____ **[Name of Bidder]**, the party making the foregoing Bid, that the Bid is not made in the interest of, or on behalf of, any undisclosed person, partnership, company, association, organization, or corporation; that the Bid is genuine and not collusive or sham; that Bidder has not directly or indirectly induced or solicited any other bidder to put in a false or sham Bid, and has not directly or indirectly colluded, conspired, connived or agreed with any bidder or anyone else to put in a sham Bid, or that anyone shall refrain from bidding, and that the Bidder has not in any manner, directly or indirectly, sought by contract, communication or conference with anyone to fix the Bid price of Bidder or any other bidder, or to fix any overhead, profit or cost element of the Bid price, or of that of any other bidder, or to secure any advantage against the City of Cupertino, or anyone interested in the proposed contract; that all statements contained in the Bid are true; and further, that Bidder has not, directly or indirectly, submitted its Bid price or any breakdown thereof, or the contents thereof, or divulged information or data relative thereto, or paid, and will not pay, any fee to any corporation, partnership, company association, organization, Bid depository, or to any member or agent thereof to effectuate a collusive or sham Bid.

Executed under penalty of perjury under the laws of the State of California:

_____
(Name of Bidder)

_____
(Signature of Principal)

Subscribed and sworn before me _____

This _____ day of _____, 2015

Notary Public of the State of _____
In and for the County of_____
My Commission expires_____ (Seal)

(If Bidder is a partnership or a joint venture, this affidavit must be signed and sworn to by every member of the partnership or venture.)

(If Bidder [including any partner or venturer of a partnership or joint venture] is a corporation, this affidavit must be signed by the Chairman, President, or Vice President and by the Secretary, Assistant Secretary, Chief Financial Officer, or Assistant Treasurer.)

(If Bidder's affidavit on this form is made outside the State of California, the official position of the person taking such affidavit shall be certified according to law.)

END OF DOCUMENT

DOCUMENT 00482

BIDDER CERTIFICATIONS

CITY OF CUPERTINO
2014 SIDEWALK ACCESSIBILITY IMPROVEMENTS

The undersigned Bidder certifies to the City of Cupertino as set forth in sections 1 through 7 below.

1. STATEMENT OF CONVICTIONS

By my signature hereunder, I hereby swear, under penalty of perjury, that no more than one final, unappealable finding of contempt of court by a Federal Court has been issued against Bidder within the past two years because of failure to comply with an order of a Federal Court or to comply with an order of the National Labor Relations Board.

2. CERTIFICATION OF WORKER'S COMPENSATION INSURANCE

By my signature hereunder, as the Bidder, I certify that I am aware of the provisions of Section 3700 of the Labor Code which require every employer to be insured against liability for worker's compensation or to undertake self-insurance in accordance with the provisions of that Code, and I will comply with such provisions before commencing the performance of the work of this Contract.

3. CERTIFICATION OF PREVAILING WAGE RATES AND RECORDS

By my signature hereunder, as the Bidder, I certify that I am aware of the provisions of Section 1773 of the California Labor Code, which requires the payment of prevailing wage on public projects. Also, that the Bidder and any sub bidders under the Bidder shall comply with California Labor Code §1776, regarding wage records, and with California Labor Code §1777.5, regarding the employment and training of apprentices. It is the Bidder's responsibility to ensure compliance by any and all subcontractors performing work under this Contract.

4. CERTIFICATION OF COMPLIANCE WITH PUBLIC WORKS CHAPTER OF LABOR CODE

By my signature hereunder, as the Bidder, I certify that I am aware of Sections 1777.1 and 1777.7 of the California Labor Code and Bidder and Subcontractors are eligible to bid and work on public works projects.

5. CERTIFICATE OF NON-DISCRIMINATION

By my signature hereunder, on behalf of the Bidder making this Bid, the undersigned certifies that there will be no discrimination in employment with regard to race, color, religion, gender, sexual orientation, age or national origin; that all federal, state, and local directives and executive orders regarding non-discrimination in employment will be complied with; and that the principle of equal opportunity in employment will be demonstrated positively and aggressively.

6. CERTIFICATION REGARDING PREVIOUS DISQUALIFICATIONS

By my signature hereunder, I hereby swear, under penalty of perjury, that the below indicated Bidder, any officer of such Bidder, or any employee of such Bidder who has a proprietary interest in such Bidder, has never been disqualified, removed or otherwise prevented from bidding on, or completing a Federal, State, or local government project because of a violation of law or a safety regulation except as indicated on the separate sheet attached hereto entitled "Previous Disqualifications." If such exceptions are attached, please explain the circumstances.

7. CERTIFICATION OF ADEQUACY OF CONTRACT AMOUNT

By my signature hereunder, as the Contractor, pursuant to Labor Code Section 2810(a), I certify that, if awarded the Contract based on the undersigned's Bid, the Contract will include funds sufficient to allow the Contractor to comply with all applicable local, state, and federal laws or regulations governing the labor or services to be provided. I understand that the City will be relying on this certification if it awards the Contract to the undersigned.

BIDDER: _____
(Name of Bidder)

Date: _____, 2015

By:_____
(Signature)

Name:_____
(Print Name)

Its:_____
(Title)

END OF DOCUMENT

DOCUMENT 00520

CONTRACT

THIS CONTRACT, dated this ___ day of _____, 2014, by and between _____**,** whose place of business is located at _____ ("Contractor"), and the CITY OF CUPERTINO, a Municipal Corporation of the State of California ("City") acting under and by virtue of the authority vested in the City by the laws of the State of California.

WHEREAS, City, on the ___ day of _____, 2014 awarded to Contractor the following Project:

PROJECT NUMBER 2014-15
2014 Sidewalk Accessibility Improvements

NOW, THEREFORE, in consideration of the mutual covenants hereinafter set forth, Contractor and City agree as follows:

Article 1. Work

1.1 Contractor shall complete all Work specified in the Contract Documents, in accordance with the Specifications, Drawings, and all other terms and conditions of the Contract Documents.

Article 2. Agency and Notices to City

2.1 City has designated Roger Lee, Assistant Director of Public Works, to act as City's Authorized Representative(s), who will represent City in performing City's duties and responsibilities and exercising City's rights and authorities in Contract Documents. City may change the individual(s) acting as City's Authorized Representative(s), or delegate one or more specific functions to one or more specific City's Representatives, including without limitation engineering, architectural, inspection and general administrative functions, at any time with notice and without liability to Contractor. Each City's Representative is the beneficiary of all Contractor obligations to City, including without limitation, all releases and indemnities.

2.2 All notices or demands to City under the Contract Documents shall be to City's Authorized Representative at: 10300 Torre Avenue, Cupertino, California 95014 or to such other person(s) and address(es) as City shall provide to Contractor.

Article 3. Contract Time and Liquidated Damages

3.1 Contract Time.

The Contract Time will commence to run on the date indicated in the Notice to Proceed. City may give a Notice to Proceed at any time within 30 Days after the Notice of Award. Contractor shall not do any Work at the Site prior to the date on which the Contract Time commences to run.

Contractor shall achieve Final Completion of the entire Work and be ready for Final Payment in accordance with Section 00700 (General Provisions) within 45 working days as provided in Document 00700 (General Provisions)

3.2 Liquidated Damages.

City and Contractor recognize that time is of the essence of this Contract and that City will suffer financial loss in the form of contract administration expenses (such as project management and consultant expenses), if all or any part of the Work is not completed within the times specified above, plus any extensions thereof allowed in

accordance with the Contract Documents. Consistent with Document 00700 (General Provisions), Contractor and City agree that because of the nature of the Project, it would be impractical or extremely difficult to fix the amount of actual damages incurred by City because of a delay in completion of all or any part of the Work. Accordingly, City and Contractor agree that as liquidated damages for delay Contractor shall pay City:

3.2.1 $500 for each Calendar Day that expires after the time specified herein for Contractor to achieve Final Completion of the entire Work as specified above.
3.2.2 $75 per Calendar Day for failure to remove concrete from a work area within the same calendar week.
3.2.3 $75 per Calendar Day for failure to replace asphalt to finish grade within 30 calendar days.

Liquidated damages shall apply cumulatively and, except as provided below, shall be presumed to be the damages suffered by City resulting from delay in completion of the Work.

3.3 Liquidated damages for delay shall only cover administrative, overhead, interest on bonds, and general loss of public use damages suffered by City as a result of delay. Liquidated damages shall not cover the cost of completion of the Work, damages resulting from defective Work, lost revenues or costs of substitute facilities, or damages suffered by others who then seek to recover their damages from City (for example, delay claims of other contractors, subcontractors, tenants, or other third-parties), and defense costs thereof.

Article 4. Contract Sum

4.1 City shall pay Contractor the Contract Sum for completion of Work in accordance with Contract Documents as set forth in Contractor's Bid, attached hereto: See Exhibit "A" attached

Article 5. Contractor's Representations

In order to induce City to enter into this Contract, Contractor makes the following representations and warranties:

5.1 Contractor has visited the Site and has examined thoroughly and understood the nature and extent of the Contract Documents, Work, Site, locality, actual conditions, as-built conditions, and all local conditions, and federal, state and local laws and regulations that in any manner may affect cost, progress, performance or furnishing of Work or which relate to any aspect of the means, methods, techniques, sequences or procedures of construction to be employed by Contractor and safety precautions and programs incident thereto.

5.2 Contractor has examined thoroughly and understood all reports of exploration and tests of subsurface conditions, as-built drawings, drawings, products specifications or reports, available for Bidding purposes, of physical conditions, including Underground Facilities, or which may appear in the Drawings. Contractor accepts the determination set forth in these Documents and Document 00700 (General Provisions) of the limited extent of the information contained in such materials upon which Contractor may be entitled to rely. Contractor agrees that except for the information so identified, Contractor does not and shall not rely on any other information contained in such reports and drawings.

5.3 Contractor has conducted or obtained and has understood all such examinations, investigations, explorations, tests, reports and studies (in addition to or to supplement those referred to in Section 5.2 of this Document 00520) that pertain to the subsurface conditions, as-built conditions, underground facilities, and all other physical conditions at or contiguous to the Site or otherwise that may affect the cost, progress, performance or furnishing of Work, as Contractor considers necessary for the performance or furnishing of Work at the Contract Sum, within the Contract Time and in accordance with the other terms and conditions of the Contract Documents, including specifically the provisions of Document 00700 (General Provisions); and no additional examinations, investigations, explorations, tests, reports, studies or similar information or data are or will be required by Contractor for such purposes.

5.4 Contractor has correlated its knowledge and the results of all such observations, examinations, investigations, explorations, tests, reports and studies with the terms and conditions of the Contract Documents.

5.5 Contractor has given City prompt written notice of all conflicts, errors, ambiguities, or discrepancies that it has discovered in or among the Contract Documents and as-built drawings and actual conditions and the written resolution thereof through Addenda issued by City is acceptable to Contractor.

5.6 Contractor is duly organized, existing and in good standing under applicable state law, and is duly qualified to conduct business in the State of California.

5.7 Contractor has duly authorized the execution, delivery and performance of this Contract, the other Contract Documents and the Work to be performed herein. The Contract Documents do not violate or create a default under any instrument, contract, order or decree binding on Contractor.

5.8 Contractor has listed Subcontractors pursuant to the Subcontractor Listing Law, California Public Contracting Code §4100 *et seq.* in document 00340 (Subcontractors List)

Article 6. Contract Documents

6.1 Contract Documents consist of the following documents, including all changes, addenda, and modifications thereto:

Document 00002 Signature Page
Document 00003 Project Directory
Document 00012 Caltrans/City Cross-Reference Table
Document 00100 Advertisement For Bids
Document 00200 Instructions to Bidders
Document 00210 Indemnity and Release Agreement
Document 00400 Bid Form
Document 00411 Bond Accompanying Bid
Document 00430 Subcontractors List
Document 00450 Statement of Qualifications
Document 00481 Non-Collusion Affidavit
Document 00482 Bidder Certifications
Document 00520 Contract
Document 00530 Insurance Forms
Document 00610 Construction Performance Bond
Document 00620 Construction Labor and Material Payment Bond
Document 00630 Guaranty
Document 00650 Agreement and Release of Any and All Claims
Document 00660 Substitution Request Form
Document 00700 General Conditions
Document 00800 Special Conditions
Document 00820 Traffic Control Requirements
Document 00821 Insurance
Document 00822 Apprenticeship Program
Technical Specifications
Addenda(s)
Drawings/Plans

6.2 There are no Contract Documents other than those listed in this Document 00520, Article 6. The Contract Documents may only be amended, modified or supplemented as provided in Document 00700 (General Provisions).

Article 7. Miscellaneous

7.1 Terms used in this Contract are defined in Document 00700 (General Provisions) and will have the meaning indicated therein.

7.2 It is understood and agreed that in no instance are the persons signing this Contract for or on behalf of City or acting as an employee, agent, or representative of City, liable on this Contract or any of the Contract Documents, or upon any warranty of authority, or otherwise, and it is further understood and agreed that liability of the City is limited and confined to such liability as authorized or imposed by the Contract Documents or applicable law.

7.3 Contractor shall not assign any portion of the Contract Documents, and may subcontract portions of the Contract Documents only in compliance with the Subcontractor Listing Law, California Public Contracting Code §4100 *et seq*.

7.4 The Contract Sum includes all allowances (if any).

7.5 In entering into a public works contract or a subcontract to supply goods, services or materials pursuant to a public works contract, Contractor or Subcontractor offers and agrees to assign to the awarding body all rights, title and interest in and to all causes of action it may have under Section 4 of the Clayton Act (15 U.S.C. §15) or under the Cartwright Act (Chapter 2 (commencing with Section 16700) of Part 2 of Division 7 of the Business and Professions Code), arising from purchases of goods, services or materials pursuant to the public works contract or the subcontract. This assignment shall be made and become effective at the time City tenders final payment to Contractor, without further acknowledgment by the parties.

7.6 Copies of the general prevailing rates of per diem wages for each craft, classification, or type of worker needed to execute the Contract, as determined by Director of the State of California Department of Industrial Relations, are deemed included in the Contract Documents and on file at City's office, or may be obtained of the State of California web site http://www.dir.ca.gov/DLSR/PWD/Northern.html and shall be made available to any interested party on request. Pursuant to Section 1861 of the Labor Code, Contractor represents that it is aware of the provisions of Section 3700 of the Labor Code which require every employer to be insured against liability for workers' compensation or to undertake self-insurance in accordance with the provisions of that Code, and Contractor shall comply with such provisions before commencing the performance of the Work of the Contract Documents.

7.7 Should any part, term or provision of this Contract or any of the Contract Documents, or any document required herein or therein to be executed or delivered, be declared invalid, void or unenforceable, all remaining parts, terms and provisions shall remain in full force and effect and shall in no way be invalidated, impaired or affected thereby. If the provisions of any law causing such invalidity, illegality or unenforceability may be waived, they are hereby waived to the end that this Contract and the Contract Documents may be deemed valid and binding contracts, enforceable in accordance with their terms to the greatest extent permitted by applicable law. In the event any provision not otherwise included in the Contract Documents is required to be included by any applicable law, that provision is deemed included herein by this reference(or, if such provision is required to be included in any particular portion of the Contract Documents, that provision is deemed included in that portion).

7.8 This Contract and the Contract Documents shall be deemed to have been entered into in the County of Santa Clara, State of California, and governed in all respects by California law (excluding choice of law rules). The exclusive venue for all disputes or litigation hereunder shall be in Santa Clara County. Both parties hereby waive their rights under California Code of Civil Procedure Section 394 to file a motion to transfer any action or proceeding arising out of the Contract Documents to another venue. Contractor accepts the Claims Procedure in Document 00700, Article 12, established under the California Government Code, Title 1, Division 3.6, Part 3, Chapter 5.

IN WITNESS WHEREOF the parties have executed this Contract in triplicate the day and year first above written.

2014 SIDEWALK ACCESSIBILITY IMPROVEMENTS

CITY:
CITY OF CUPERTINO, a Municipal Corporation of the State of California

Attest:

_____
City Clerk: Grace Schmidt

Approved as to form by City Attorney:

_____
City Attorney: Carol Korade

I hereby certify, under penalty of perjury, that Timm Borden, Director of Public Works of the City of Cupertino was duly authorized to execute this document.

Dated:_____

_____
David Brandt, City Manager of the City of Cupertino, a Municipal Corporation of the State of California

Designated Representative:

Name: Roger Lee

Title: Assistant Director of Public Works

Address: 10300 Torre Ave., Cupertino, CA 95014

Phone: 408-777-3269

Facsimile: 408-777-3354

AMOUNT:
ACCOUNT NUMBER:
ACCOUNT NUMBER:
FILE NO.:

CONTRACTOR:

By: _____
[Signature]

_____
[Please print name here]

Title: _____
[If Corporation: Chairman , President, or Vice President]

By: _____
[Signature]

_____
[Please print name here]

Title: _____
[If Corporation: Secretary, Assistant Secretary, Chief Financial Officer, or Assistant Treasurer]

_____
State Contractor's License No. Classification

_____
Expiration Date

Taxpayer ID No._____

Name: _____

Title: _____

Address: _____

Phone: _____

Facsimile: _____

NOTARY ACKNOLEDGEMENT IS REQUIRED. IF A CORPORATION, CORPORATE SEAL AND CORPORATE NOTARY ACKNOWLEDEMENT AND FEDERAL TAX ID ARE REQUIRED. IF NOT A CORPORATION SOCIAL SECURITY NO. IS REQUIRED

END OF DOCUMENT

DOCUMENT 00530

INSURANCE FORMS

INSURANCE FORMS INSTRUCTIONS

FOR ITEMS 3, 4 AND 5, THE FORMS PROVIDED BY THE CITY OF CUPERTINO MUST BE USED. FORMS OTHER THAN THESE WILL NOT BE ACCEPTED.

ALL DOCUMENTS MUST BE ORIGINALS - SUBMIT IN TRIPLICATE

1. Insurance Agreement - **Must** be signed by Contractor.

2. Certificate of Insurance to the City of Cupertino - **must** be completed by the insurance agent **or** **must** provide a certificate on the company's form. They **must** contain the same information.

3. Endorsement of Additional Insured and Primary Insurance and Notice of Cancellation - **must** be signed by the insurance agent for general liability and automobile liability only.

4. Comprehensive general liability/commercial general liability endorsement of aggregate limits of insurance per project - **must** be signed by the insurance agent for general liability only.

5. Waiver of subrogation endorsement worker's compensation insurance - **must** be signed by the insurance agent for worker's compensation only.

INSURANCE AGREEMENT

A. Contractor is aware of the provisions of Section 3700 of the Labor Code, which requires every employer to be insured against liability for worker's compensation or undertake self-insurance in accordance with the provisions of that Code, and will comply with such provisions before commencing the performance of the work of this Contract.

B. Contractor and all subcontractors will carry worker's compensation insurance for the protection of its employees during the progress of the work. The insurer shall waive its rights of subrogation against the City, the City's officers, agents and employees and shall issue an endorsement to the policy evidencing same.

C. Contractor shall carry at all times, on all operations hereunder, commercial general liability insurance, automobile liability insurance and builder's all risk insurance. All insurance coverage shall be in amounts required by the City and shall be evidenced by the issuance of a certificate in a form prescribed by the City and shall be underwritten by insurance companies satisfactory to the City for all operations, sub-contract work, contractual obligations, product or completed operations, all owned vehicles and non-owned vehicles. Said insurance coverage obtained by the Contractor, excepting worker's compensation coverage, shall name the City, its engineer, and each of its directors, officers, agents and employees, as determined by the City, as additional insureds on said policies. Insurers must be licensed to do business in the State of California. The Insurers must also have an "A" policyholder's rating and a financial rating of at least Class VII in accordance with the current Best's Guide Rating or that is otherwise acceptable to the City.

D. Before Contractor performs any work at, or prepares or delivers materials to, the site of construction, Contractor shall furnish certificates of insurance evidencing the foregoing insurance coverages and such certificates shall provide the name and policy number of each carrier and policy and that the insurance is in force and will not be canceled or modified without thirty (30) days written notice to the City. Contractor shall maintain all of the foregoing insurance coverages in force until the work under this Contract is fully completed. The requirement for carrying the foregoing insurance shall not derogate from the provisions for indemnification of the City by Contractor under this Contract and for the duration of the warranty period. Notwithstanding nor diminishing the obligations of Contractor with respect to the foregoing, Contractor shall maintain in full force and effect during the life of this Contract, the following insurance in amounts not less than the amounts specified and having a Best's Guide Rating of A, Class VII or better or that is otherwise acceptable to the City.

LIMITS

Worker's Compensation & Employers' Liability	In accordance with the Worker's Compensation Act of the State of California – Worker's comp "statutory" per CA Law; Employers' Liability $1,000,000 per occurrence.
General Liability - commercial general liability; including provisions for contractual liability, personal injury, independent contractors and products – completed operations hazard.	Combined single limit of $2.0 million per occurrence; $4.0 million in the aggregate
Automobile Liability - comprehensive covering owned, non-owned and hired automobiles.	Combined single limit of $1.0 million per occurrence.

_____ By:_____

(Contractor's Name)

Dated:_____20___

CERTIFICATE OF INSURANCE TO THE CITY OF CUPERTINO

This certifies to the City of Cupertino that the following described policies have been issued to the insured named below and are in force at this time.

Insured: _____

Address: _____

_____

Description of operations/locations/products insured (show contract name and/or number, if any):

_____

_____

==========

WORKER'S COMPENSATION

_____
(name of insurer)

* Statutory Min.
* Employer's Liability

$ _____ $ _____ $ _____

Insurance Company's State License No. _____

==========

Check Policy Type: Each Occurrence $_____

COMPREHENSIVE GENERAL LIABILITY

[ ] Premises/Operations	General Aggregate (if applicable)	$_____
[ ] Owners & Contractors Protective	Aggregate	$_____
[ ] Contractual for Specific Contract $_____	Personal Injury	
[ ] Products Liability		
[ ] XCU Hazards		
[ ] Broad Form P.D.	Fire Damage (any one fire)	$_____
[ ] Severability of Interest Clause		
[ ] Personal Injury with Employee Exclusion Removed	Medical Expense (any one person)	$_____
or	Self-Insured	
COMMERCIAL GENERAL LIABILITY	Retention	$_____

_____
(name of insurer)

Policy No. _____ Expiration Date_____

AUTOMOTIVE/VEHICLE LIABILITY Commercial Form Liability Coverage	BODILY INJURY Each Person	PROPERTY DAMAGE Each Accident
_____ (name of insurer)	$_____ Each Accident	$_____
	$_____	or
	Combined Single Limit	$_____

Policy No. _____ Expiration Date _____

==========

BUILDER'S RISK "ALL RISK"
This is to certify that the following policy has been issued by the below-stated company in conformance with the requirements of the project documents and is in force at this time.

_____**N/A**_____
(Name of insurer)
Policy No. _____ Expiration Date_____
Limits of Liability: _____ Deductible: _____
==========
_____ A copy of all Endorsements to the policy(ies) which in any way
(agent's initial) limit the above-listed types of coverage are attached to this

Certificate of Insurance.

This Certificate of Insurance is not an insurance policy and does not amend, extend or alter the coverage afforded by the policies listed herein. Notwithstanding any requirement, term, or condition of any contract or any other document with respect to which this Certificate of Insurance may be issued or may pertain, the insurance afforded by the policies described herein is subject to all the terms, exclusions and conditions of such policies.

IT IS HEREBY CERTIFIED that the above policy(ies) provide liability insurance as required by the Agreement between the City and the insured.

By:_____ Dated:_____20____

Attach Certificate of Insurance and Additional Insured Endorsement on company forms.

ADDITIONAL INSURED ENDORSEMENT
and
ENDORSEMENT OF PRIMARY INSURANCE
and
NOTICE OF POLICY
CANCELLATION ENDORSEMENT

Project Title and Number:_____

In consideration of the policy premium and notwithstanding any inconsistent statement in the policy to which this Endorsement is attached or any other Endorsement attached thereto, it is agreed as follows:

The City of Cupertino ("City") and its directors, officers, engineers, agents and employees, and all public agencies from whom permits will be obtained and their directors, officers, engineers, agents and employees, and the State of California, and its officers, agents and employees, are hereby declared to be additional insureds under the terms of this policy, but only with respect to the operations of the Contractor at or upon any of the premises of the City in connection with the Contract with the City, or acts or omissions of the additional insureds in connection with, but limited to its general supervision or inspection of said operations.

The insurance afforded by this policy is primary insurance, and no additional insurance held or owned by the designated additional insured(s) shall be called upon to cover a loss under said additional policy.

Cancellation Notice. The insurance afforded by this policy shall not be suspended, voided, canceled, reduced in coverage or in limits, or materially altered, except after thirty (30) days' prior written notice by certified mail, return receipt requested, has been given to the City of Cupertino ("City"). Such notice shall be addressed to the City as indicated below.

POLICY INFORMATION

1. Insurance Company:_____

2. Insurance Policy Number:_____

3. Effective Date of this Endorsement:_____20____

4. Insured:_____

All notices herein provided to be given by the Insurance Company to the City in connection with this policy and these Endorsements, shall be mailed to or delivered to the City at 10300 Torre Avenue; Cupertino, California 95014.

I, _____(print/type name)

warrant that I have authority to bind the below listed Insurance Company and by my signature hereon do so bind this Company.

Signature of Authorized Representative:_____
(Original signature required on all Endorsements furnished to the District)

Names of
Agent/Agency:_____ Title:_____

Address:_____ Telephone: _____ _____ _____

_____ Facsimile: _____ _____ _____

COMPREHENSIVE GENERAL LIABILITY
COMMERCIAL GENERAL LIABILITY
ENDORSEMENT OF AGGREGATE LIMITS OF INSURANCE PER PROJECT

Project Title and Number:_____

In consideration of the policy premium and notwithstanding any inconsistent statement in the policy to which this Endorsement is attached or any other Endorsement attached thereto, it is as follows:

This Endorsement modifies the insurance provided under the General Liability Coverage part of the below-referenced policy of insurance.

The general aggregate limit under LIMITS OF INSURANCE applies separately to the project described as _____

POLICY INFORMATION

1. Insurance Company:_____

2. Insurance Policy Number:_____

3. Effective Date of this Endorsement:_____20____

4. Insured:_____

5. Additional Insured: City of Cupertino, its directors, officers, agents and employees.

All notices herein provided to be given by the Insurance Company to the City in connection with this policy and this Endorsement, shall be mailed to or delivered to the City at 10300 Torre Avenue; Cupertino, California 95014.

I, _____(print/type name) warrant that I have authority to bind the below listed Insurance Company and by my signature hereon do so bind this Company.

Signature of Authorized Representative:_____
(Original signature required on all Endorsements furnished to the District)

Names of
Agent/Agency:_____ Title:_____
Address:_____ Telephone: _____ _____ _____
_____ Facsimile: _____ _____ _____

WAIVER OF SUBROGATION ENDORSEMENT
WORKER'S COMPENSATION INSURANCE

Project Title and Number:_____

In consideration of the policy premium and notwithstanding any inconsistent statement in the policy to which this Endorsement is attached or any other Endorsement attached thereto, it is agreed as follows:

It is agreed that with respect to such insurance as is afforded by the policy, the Insurance Company waives any right of subrogation against the City of Cupertino, and each of its directors, officers, agents, consultants and employees by reason of any payment made on account of injury, including death resulting therefrom, sustained by any employee of the insured, arising out of the performance of the above-referenced Contract.

POLICY INFORMATION

1. Insurance Company:_____

2. Insurance Policy Number:_____

3. Effective Date of this Endorsement:_____20____

4. Insured:_____

All notices herein provided to be given by the Insurance Company to the City in connection with this policy and this Endorsement, shall be mailed to or delivered to the City at 10300 Torre Avenue; Cupertino, California 95014.

I, _____(print/type name) warrant that I have authority to bind the below listed Insurance Company and by my signature hereon do so bind this Company.

Signature of Authorized Representative:_____
(Original signature required on all Endorsements furnished to the District)

Names of
Agent/Agency:_____ Title:_____

Address:_____ Telephone: _____ _____ _____

_____ Facsimile: _____ _____ _____

DOCUMENT 00610

CONSTRUCTION PERFORMANCE BOND

THIS CONSTRUCTION PERFORMANCE BOND ("Bond") is dated _____**,** is in the penal sum of _____ _____ [which is one hundred percent of the Contract Price]**,** and is entered into by and between the parties listed below to ensure the faithful performance of the Construction Contract listed below. This Bond consists of this page and the Bond Terms and Conditions, paragraphs 1 through 12, attached to this page. Any singular reference to _____ ("Contractor"), _____ ("Surety"), the City of Cupertino, a Municipal Corporation of the State of California ("City") or other party shall be considered plural where applicable.

CONTRACTOR:	SURETY:
_____	_____
Name	Name
_____	_____
Address	Principal Place of Business
_____	_____
City/State/Zip	City/State/Zip

CONSTRUCTION CONTRACT:

2014 SIDEWALK ACCESSIBILITY IMPROVEMENTS
PROJECT NUMBER 2014-15

at Cupertino, California.

DATED _____, 20____ in the Amount of $_____ (the "Penal Sum")

CONTRACTOR AS PRINCIPAL	SURETY
Company: (Corp. Seal)	Company: (Corp. Seal)
Signature:_____	Signature: _____
Name and Title: _____	Name and Title:_____
_____	_____

BOND TERMS AND CONDITIONS

1. Contractor and Surety, jointly and severally, bind themselves, their heirs, executors, administrators, successors and assigns to City for the complete and proper performance of the Construction Contract, which is incorporated herein by reference.

2. If Contractor completely and properly performs all of its obligations under the Construction Contract, Surety and Contractor shall have no obligation under this Bond.

3. If there is no City Default, Surety's obligation under this Bond shall arise after:

   3.1 City has declared a Contractor Default under the Construction Contract pursuant to the terms of the Construction Contract; and

   3.2 City has agreed to pay the Balance of the Contract Sum:

      3.2.1 To Surety in accordance with the terms of this Bond and the Construction Contract; or

3.2.2 To a contractor selected to perform the Construction Contract in accordance with the terms of this Bond and the Construction Contract.

4. When City has satisfied the conditions of paragraph 3, Surety shall promptly (within 30 days) and at Surety's expense elect to take one of the following actions:

4.1 Arrange for Contractor, with consent of City, to perform and complete the Construction Contract (but City may withhold consent, in which case the Surety must elect an option described in paragraphs 4.2, 4.3 or 4.4, below); or

4.2 Undertake to perform and complete the Construction Contract itself, through its agents or through independent contractors; provided, that Surety may not select Contractor as its agent or independent contractor without City's consent; or

4.3 Undertake to perform and complete the Construction Contract by obtaining bids from qualified contractors acceptable to City for a contract for performance and completion of the Construction Contract, and, upon determination by City of the lowest responsible bidder, arrange for a contract to be prepared for execution by City and the contractor selected with City's concurrence, to be secured with performance and payment bonds executed by a qualified surety equivalent to the bonds issued on the Construction Contract; and, if Surety's obligations defined in paragraph 6, below, exceed the Balance of the Contract Sum, then Surety shall pay to City the amount of such excess; or

4.4 Waive its right to perform and complete, arrange for completion, or obtain a new contractor and with reasonable promptness under the circumstances, and, after investigation and consultation with City, determine in good faith its monetary obligation to City under paragraph 6, below, for the performance and completion of the Construction Contract and, as soon as practicable after the amount is determined, tender payment therefor to City with full explanation of the payment's calculation. If City accepts Surety's tender under this paragraph 4.4, City may still hold Surety liable for future damages then unknown or unliquidated resulting from the Contractor Default. If City disputes the amount of Surety's tender under this paragraph 4.4, City may exercise all remedies available to it at law to enforce Surety's liability under paragraph 6, below.

5. If Surety does not proceed as provided in paragraph 4, above, then Surety shall be deemed to be in default on this Bond ten days after receipt of an additional written notice from City to Surety demanding that Surety perform its obligations under this Bond. At all times City shall be entitled to enforce any remedy available to City at law or under the Construction Contract including, without limitation, and by way of example only, rights to perform work, protect work, mitigate damages, advance critical work to mitigate schedule delay, or coordinate work with other consultants or contractors.

6. Surety's monetary obligation under this Bond is limited by the Amount of this Bond identified herein as the Penal Sum. This monetary obligation shall augment the Balance of the Contract Sum. Subject to these limits, Surety's obligations under this Bond are commensurate with the obligations of Contractor under the Construction Contract. Surety's obligations shall include, but are not limited to:

6.1 The responsibilities of Contractor under the Construction Contract for completion of the Construction Contract and correction of defective work;

6.2 The responsibilities of Contractor under the Construction Contract to pay liquidated damages, and for damages for which no liquidated damages are specified in the Construction Contract, actual damages caused by non-performance of the Construction Contract including, but not limited to, all valid and proper backcharges, offsets, payments, indemnities, or other damages;

6.3 Additional legal, design professional and delay costs resulting from Contractor Default or resulting from the actions or failure to act of the Surety under paragraph 4, above (but excluding attorney's fees incurred to enforce this Bond).

7. No right of action shall accrue on this Bond to any person or entity other than City or its successors or assigns.

8. Surety hereby waives notice of any change, alteration or addition to the Construction Contract or to related subcontracts, purchase orders and other obligations, including changes of time. Surety consents to all terms of the Construction Contract, including provisions on changes to the Contract. No extension of time, change, alteration, modification, deletion, or addition to the Contract Documents, or of the work required thereunder, shall release or exonerate Surety on this Bond or in any way affect the obligations of Surety on this Bond.

9. Any proceeding, legal or equitable, under this Bond shall be instituted in any court of competent jurisdiction where a proceeding is pending between City and Contractor regarding the Construction Contract, or in the courts of the County of Santa Clara, or in a court of competent jurisdiction in the location in which the work is located. Communications from City to Surety under paragraph 3.1 of this Bond shall be deemed to include the necessary contracts under paragraph 3.2 of this Bond unless expressly stated otherwise.

10. All notices to Surety or Contractor shall be mailed or delivered (at the address set forth on the signature page of this Bond), and all notices to City shall be mailed or delivered as provided in Document 00520 (Contract). Actual receipt of notice by Surety, City or Contractor, however accomplished, shall be sufficient compliance as of the date received at the foregoing addresses.

11. Any provision in this Bond conflicting with any statutory or regulatory requirement shall be deemed deleted herefrom and provisions conforming to such statutory requirement shall be deemed incorporated herein.

12. Definitions.

    12.1 Balance of the Contract Sum: The total amount payable by City to Contractor pursuant to the terms of the Construction Contract after all proper adjustments have been made under the Construction Contract, for example, deductions for progress payments made, and increases/decreases for approved modifications to the Construction Contract.

    12.2 Construction Contract: The contract between City and Contractor identified on the signature page of this Bond, including all Contract Documents and changes thereto.

    12.3 Contractor Default: Material failure of Contractor, which has neither been remedied nor waived, to perform or otherwise to comply with the terms of the Construction Contract including, but not limited to, “default” or any other condition allowing a termination for cause as provided in Document 00700 (General Conditions).

    12.4 City Default: Material failure of City, which has neither been remedied nor waived, to pay Contractor progress payments due under the Construction Contract or to perform other material terms of the Construction Contract, if such failure is the cause of the asserted Contractor Default and is sufficient to justify Contractor termination of the Construction Contract.

END OF DOCUMENT

DOCUMENT 00620

CONSTRUCTION LABOR AND MATERIAL PAYMENT BOND

THIS CONSTRUCTION LABOR AND MATERIAL PAYMENT BOND ("Bond") is dated _____, is in the penal sum _____ [one hundred percent of the Contract Price], and is entered into by and between the parties listed below to ensure the payment of claimants under the Construction Contract listed below. This Bond consists of this page and the Bond Terms and Conditions, paragraphs 1 through 14, attached to this page. Any singular reference to _____ ("Contractor"), _____ ("Surety"), the City of Cupertino, a Municipal Corporation of the State of California ("City") or other party shall be considered plural where applicable.

CONTRACTOR:	SURETY:
_____	_____
Name	Name
_____	_____
Address	Principal Place of Business
_____	_____
City/State/Zip	City/State/Zip

CONSTRUCTION CONTRACT:

2014 SIDEWALK ACCESSIBILITY IMPROVEMENTS-
PROJECT NUMBER 2014-15

at Cupertino, California.

DATED _____, 20____ in the Amount of $_____(the "Penal Sum")

CONTRACTOR AS PRINCIPAL	SURETY
Company: (Corp. Seal)	Company: (Corp. Seal)
Signature:_____	Signature: _____
Name and Title: _____	Name and Title:_____
_____	_____

BOND TERMS AND CONDITIONS

1. Contractor and Surety, jointly and severally, bind themselves, their heirs, executors, administrators, successors and assigns to City and to Claimants, to pay for labor, materials and equipment furnished for use in the performance of the Construction Contract, which is incorporated herein by reference.

2. With respect to City, this obligation shall be null and void if Contractor:

   2.1 Promptly makes payment, directly or indirectly, for all sums due Claimants; and

   2.2 Defends, indemnifies and holds harmless City from all claims, demands, liens or suits by any person or entity who furnished labor, materials or equipment for use in the performance of the Construction Contact, provided City has promptly notified Contractor and Surety (at the address set forth on the signature page of this Bond) of any claims, demands, liens or suits and tendered defense of such claims, demands, liens or suits to Contractor and Surety, and provided there is no City Default.

3. With respect to Claimants, this obligation shall be null and void if Contractor promptly makes payment, directly or indirectly through its Subcontractors, for all sums due Claimants. If Contractor or its Subcontractors, however, fail to pay any of the persons named in Section 3181 of the California Civil Code, or amounts due under the Unemployment Insurance Code with respect to Work or labor performed under the Contract, or for any amounts required to be deducted, withheld, and paid over to the Employment Development Department from the wages of employees of Contractor or Subcontractors pursuant to Section 13020 of the Unemployment Insurance Code, with respect to such Work and labor, then Surety shall pay for the same, and also, in case suit is brought upon this Bond, a reasonable attorney's fee, to be fixed by the court.

4. Consistent with the California Mechanic's Lien Law, Civil Code §3082, *et seq*., Surety shall have no obligation to Claimants under this Bond unless the Claimant has satisfied all applicable notice requirements.

5. Surety's total obligation shall not exceed the amount of this Bond, and the amount of this Bond shall be credited for any payments made in good faith by Surety under this Bond.

6. Amounts due Contractor under the Construction Contract shall be applied first to satisfy claims, if any, under any Construction Performance Bond and second, to satisfy obligations of Contractor and Surety under this Bond.

7. City shall not be liable for payment of any costs, expenses, or attorney's fees of any Claimant under this Bond, and shall have under this Bond no obligations to make payments to, give notices on behalf of, or otherwise have obligations to Claimants under this Bond.

8. Surety hereby waives notice of any change, including changes of time, to the Construction Contract or to related subcontracts, purchase orders and other obligations. Surety further hereby stipulates and agrees that no change, extension of time, alteration or addition to the terms of the Construction Contract, or to the Work to be performed thereunder, or materials or equipment to be furnished thereunder or the Specifications accompanying the same, shall in any way affect its obligations under this Bond, and it does hereby waive any requirement of notice or any such change, extension of time, alteration or addition to the terms of the Construction Contract or to the Work or to the Specifications or any other changes.

9. Suit against Surety on this Bond may be brought by any Claimant, or its assigns, at any time after the Claimant has furnished the last of the labor or materials, or both, but, per Civil Code §3249, must be commenced before the expiration of six months after the period in which stop notices may be filed as provided in Civil Code §3184.

10. All notices to Surety or Contractor shall be mailed or delivered (at the address set forth on the signature page of this Bond), and all notices to City shall be mailed or delivered as provided in Document 00520 (Contract). Actual receipt of notice by Surety, City or Contractor, however accomplished, shall be sufficient compliance as of the date received at the foregoing addresses.

11. This Bond has been furnished to comply with the California Mechanic's Lien Law including, but not limited to, Civil Code §§3247, 3248, *et seq*. Any provision in this Bond conflicting with said statutory requirements shall be deemed deleted herefrom and provisions conforming to such statutory or other legal requirements shall be deemed incorporated herein. The intent is that this Bond shall be construed as a statutory bond and not as a common law bond.

12. Upon request by any person or entity appearing to be a potential beneficiary of this Bond, Contractor shall promptly furnish a copy of this Bond or shall permit a copy to be made.

13. Contractor shall pay to persons performing labor in and about Work provided for in the Contract Documents an amount equal to or more than the general prevailing rate of per diem wages for (1) work of a similar character in the locality in which the Work is performed and (2) legal holiday and overtime work in said locality. The per diem wages shall be an amount equal to or more than the stipulated rates contained in a schedule that has been ascertained and determined by the Director of the State Department of Industrial Relations and City to be the

general prevailing rate of per diem wages for each craft or type of workman or mechanic needed to execute this Contract. Contractor shall also cause a copy of this determination of the prevailing rate of per diem wages to be posted at each Site.

14. Definitions.

14.1 Claimant: An individual or entity having a direct contract with Contractor or with a Subcontractor of Contractor to furnish labor, materials or equipment for use in the performance of the Contract, as further defined in California Civil Code §3181. The intent of this Bond shall be to include without limitation in the terms "labor, materials or equipment" that part of water, gas, power, light, heat, oil, gasoline, telephone service or rental equipment used in the Construction Contract, architectural and engineering services required for performance of the Work of Contractor and Contractor's Subcontractors, and all other items for which a stop notice might be asserted. The term Claimant shall also include the Unemployment Development Department as referred to in Civil Code §3248(b).

14.2 Construction Contract: The contract between City and Contractor identified on the signature page of this Bond, including all Contract Documents and changes thereto.

14.3 City Default: Material failure of City, which has neither been remedied nor waived, to pay the Contractor as required by the Construction Contract, provided that failure is the cause of the failure of Contractor to pay the Claimants and is sufficient to justify termination of the Construction Contract.

END OF DOCUMENT

DOCUMENT 00630

GUARANTY

TO THE CITY OF CUPERTINO, a Municipal Corporation of the State of California ("City"), for construction of

2014 SIDEWALK ACCESSIBILITY IMPROVEMENTS

CUPERTINO, CALIFORNIA

The undersigned guarantees all construction performed on this Project and also guarantees all material and equipment incorporated therein.

Contractor hereby grants to City for a period of one year following the date of Final Acceptance, or such longer period specified in the Contract Documents, its unconditional warranty of the quality and adequacy of all of the Work including, without limitation, all labor, materials and equipment provided by Contractor and its Subcontractors of all tiers in connection with the Work.

Neither final payment nor use or occupancy of the Work performed by the Contractor shall constitute an acceptance of Work not done in accordance with this Guaranty or relieve Contractor of liability in respect to any express warranties or responsibilities for faulty materials or workmanship. Contractor shall remedy any defects in the Work and pay for any damage resulting therefrom, which shall appear within one year, or longer if specified, from the date of Final Acceptance.

If within one year after the date of Final Acceptance, or such longer period of time as may be prescribed by laws or regulations, or by the terms of Contract Documents, any Work is found to be defective, Contractor shall promptly, without cost to City and in accordance with City's written instructions, correct such defective Work. Contractor shall remove any defective Work rejected by City and replace it with Work that is not defective, and satisfactorily correct or remove and replace any damage to other Work or the work of others resulting therefrom. If Contractor fails to promptly comply with the terms of such instructions, or in an emergency where delay would cause serious risk of loss or damage, City may have the defective Work corrected or the rejected Work removed and replaced. Contractor shall pay for all claims, costs, losses and damages caused by or resulting from such removal and replacement. Where Contractor fails to correct defective Work, or defects are discovered outside the correction period, City shall have all rights and remedies granted by law.

Inspection of the Work shall not relieve Contractor of any of its obligations under the Contract Documents. Even though equipment, materials, or Work required to be provided under the Contract Documents have been inspected, accepted, and estimated for payment, Contractor shall, at its own expense, replace or repair any such equipment, material, or Work found to be defective or otherwise not to comply with the requirements of the Contract Documents up to the end of the guaranty period.

All abbreviations and definitions of terms used in this Agreement shall have the meanings set forth in the Contract Documents, including, without means of limitation, Section 00700 (General Conditions).

The foregoing Guaranty is in addition to any other warranties of Contractor contained in the Contract Documents, and not in lieu of, any and all other liability imposed on Contractor under the Contract Documents and at law with respect to Contractor's duties, obligations, and performance under the Contract Documents. In the event of any conflict or inconsistency between the terms of this Guaranty and any warranty or obligation of the Contractor under the Contract Documents or at law, such inconsistency or conflict shall be resolved in favor of the higher level of obligation of the Contractor.

_____
Contractor's Name

_____
Address

_____ _____
City/State/Zip Date

END OF DOCUMENT

DOCUMENT 00650

AGREEMENT AND RELEASE OF ANY AND ALL CLAIMS

THIS AGREEMENT AND RELEASE OF ANY AND ALL CLAIMS ("Agreement and Release"), made and entered into this [_____] day of [_____], 20___, by and between the _____("City"), and _____ ("Contractor"), whose place of business is at _____.

RECITALS

A. City and Contractor entered into Contract Number _____ (the "Contract").

B. The Work under the Contract has been completed.

Now, therefore, it is mutually agreed between City and Contractor as follows:

AGREEMENT

1. Contractor will not be assessed liquidated damages except as detailed below:

Original Contract Sum	$ _____
Modified Contract Sum	$ _____
Payment to Date	$ _____
Liquidated Damages	$ _____
Payment Due Contractor	$ _____

2. Subject to the provisions of this Agreement and Release, City will forthwith pay to Contractor the sum of $_____ Dollars and _____ Cents ($_____) under the Contract, less any amounts withheld under the Contract or represented by any Notice to Withhold Funds on file with City as of the date of such payment.

3. Contractor acknowledges and hereby agrees that there are no unresolved or outstanding claims in dispute against City arising from the Contract, except for the claims described in paragraph 4 of this Document 00650. It is the intention of the parties in executing this Agreement and Release that this Agreement and Release shall be effective as a full, final and general release of all claims, demands, actions, causes of action, obligations, costs, expenses, damages, losses and liabilities of Contractor against City, and all if its agents, employees, consultants (including without limitation Consulting Cupertino), inspectors, representatives, assignees and transferees except for the Disputed Claims set forth in paragraph 4 of this Document 00650. Nothing in this Agreement and Release shall limit or modify Contractor's continuing obligations described in paragraph 6 of this Document 00650.

4. The following claims are disputed (hereinafter, the "Disputed Claims") and are specifically excluded from the operation of this Agreement and Release:

Claim No.	Date Submitted	Description of Claim	Amount of Claim

[Insert information, including attachment if necessary]

5. Consistent with California Public Contract Code Section 7100, Contractor hereby agrees that, in consideration of the payment set forth in paragraph 2 of this Document 00650, Contractor hereby releases and forever discharges City, and all of its agents, employees, consultants, inspectors, assignees and transferees from any and all liability, claims, demands, actions or causes of action of whatever kind or nature arising out of or in any way concerned with the Work under the Contract

6. Guarantees and warranties for the Work, and any other continuing obligation of Contractor, shall remain in full force and effect as specified in the Contract Documents.

7. Contractor shall immediately defend, indemnify and hold harmless the City of Cupertino, Santa Clara County, its Architect, any of their Representatives, and all of their agents, employees, consultants, inspectors, assignees and transferees, from any and all claims, demands, actions, causes of action, obligations, costs, expenses, damages, losses and liabilities that may be asserted against them by any of Contractor's suppliers and/or Subcontractors of any tier and/or any suppliers to them for any and all labor, materials, supplies and equipment used, or contemplated to be used in the performance of the Contract, except for the Disputed Claims set forth in paragraph 4 of this Document 00650.

8. Contractor hereby waives the provisions of California Civil Code Section 1542, which provides as follows:

> **A general release does not extend to claims that the creditor does not know or suspect to exist in his favor at the time of executing the release, which if known by him, must have materially affected his settlement with the debtor.**

9. The provisions of this Agreement and Release are contractual in nature and not mere recitals and shall be considered independent and severable, and if any such provision or any part thereof shall be at any time held invalid in whole or in part under any federal, state, county, municipal or other law, ruling, or regulation, then such provision, or part thereof shall remain in force and effect only to the extent permitted by law, and the remaining provisions of this Agreement and Release shall also remain in full force and effect, and shall be enforceable.

10. Contractor represents and warrants that it is the true and lawful owner of all claims and other matters released pursuant to this Agreement and Release, and that it has full right, title and authority to enter into this instrument. Each party represents and warrants that it has been represented by counsel of its own choosing in connection with this Agreement and Release.

11. All rights of City shall survive completion of the Work or termination of the Contract, and execution of this Agreement and Release.

* * * CAUTION: THIS IS A RELEASE - READ BEFORE EXECUTING * * *

THE CITY OF CUPERTINO,
a Municipal Corporation of the State of California

By: _____

Its: _____

ATTEST:

_____
[City Clerk]

[CONTRACTOR]

By: _____

Name: _____

Its: _____

By: _____

Name: _____

Its: _____

REVIEWED AS TO FORM:

_____
[City Attorney]

_____, 20 _____

END OF DOCUMENT

DOCUMENT 00660

SUBSTITUTION REQUEST FORM

To: The City of Cupertino,
A Municipal Corporation of the State of California ("City")

Project: **2014 SIDEWALK ACCESSIBILITY IMPROVEMENTS-, PROJECT NUMBER 2014-15**

Contractor:_____

Subcontractor/Supplier:_____

Drawing Sheet Reference/Detail No:_____

The undersigned Bidder submits for consideration the following equipment instead of the specified item for the above project:

Section	Paragraph	Specified Item
_____	_____	_____
_____	_____	_____

Proposed Substitution:_____

_____

The undersigned encloses the information required herein. If this Document 00660 is being submitted by a Bidder wishing to use "or equal" item(s) as provided in Document 00200 (Instructions to Bidders), the undersigned Bidder must also enclose the technical information (other than cost) otherwise required for a post-Award of Contract Request for Substitution ("RFS") under Section 00700 (General Conditions). However, If this Document 00660 is being submitted under provisions of Contract Documents after Award of Contract, the undersigned Contractor must include all information required under Section 00700 (General Conditions).

The undersigned has (a) attached manufacturer's literature, including complete technical data and laboratory test results, if applicable, (b) attached an explanation of why proposed substitution is a true equivalent to specified item, (c) included complete information on changes to Drawings and Specifications that the proposed substitution will require for its proper installation, and (d) filled in the blanks below:

A. Does the substitution affect dimensions shown on Drawings?

_____

B. Are the manufacturer's guarantees and warranties on the proposed substitution items identical to those on the specified items? If there are differences, please specify each and every difference in detail.

_____

C. What effect does the substitution have on other contractors, trades, or suppliers?

_____

D. What are the differences between the proposed substitution and the specified item? If proposed substitution has a color or pattern, provide a color board showing proposed substitution in relation to the other adjacent colors and patterns.

_____

E. Will granting the requested substitution cause any schedule delay? (If yes, please explain)

_____

The undersigned Bidder certifies that the function, appearance, and quality of the proposed substitution are equivalent or superior to those of the specified item.

Submitted by:

_____
Bidder/Contractor
[note applicable]

_____
Signature

_____
Name

_____
Address

_____
City/State/Zip

Telephone: _____

Date: _____

For Use by City:

_____ Accepted _____Accepted as Noted

_____ Not Accepted _____Received Too Late

By: _____
City's Representative

Date: _____

Remarks: _____

_____

_____

_____

END OF DOCUMENT

DOCUMENT 00700

GENERAL CONDITIONS

TABLE OF CONTENTS

SECTION		PAGE
SECTION 1.	**INTERPRETATION OF CONTRACT**	
	Abbreviations and Definitions	**700-1**
1.1	**Precedence of Contract**	**700-9**
1.2	**Clarification of Contract**	**700-9**
1.3	**Contract Documents Complementary**	**700-9**
1.4	**Contract Interpretation**	**700-10**
1.5	**State Specifications**	**700-10**
1.6	**Conflicts Involving State Specifications**	**700-10**
SECTION 2.	**BONDS AND INSURACNE**	
2.1	**Contractor's Insurance**	**700-10**
2.2	**Contractor's Bonds**	**700-10**
SECTION 3.	**SCOPE OF WORK**	
3.1	**Work to be Done**	**700-11**
3.2	**Cleaning**	**700-11**
3.3	**Change in Work**	**700-12**
3.4	**Change in Contract Price**	**700-18**
3.5	**Change in Contract Time**	**700-24**
3.6	**Changed Site Conditions**	**700-25**
3.7	**Cost Reduction Incentive**	**700-25**
3.8	**Dust Control**	**700-27**
3.9	**Excavation Safety Plans**	**700-27**
3.10	**Asbestos-Related Work**	**700-28**
3.11	**Substitutions**	**700-28**
3.12	**Hazardous Materials / Waste**	**700-30**
3.13	**Inert Solids and Plant Materials Recycling**	**700-31**
3.14	**Storm Water Pollution Control**	**700-32**
SECTION 4.	**CONTROL OF WORK**	
4.1	**Authority of City of Cupertino**	**700-38**
4.2	**Submittals**	**700-38**
4.3	**Conformity with Contract Documents and Allowable Deviations**	**700-46**
4.4	**Order of Work**	**700-46**
4.5	**Drawings and Data to be Furnished by City**	**700-46**
4.6	**Superintendence**	**700-46**
4.7	**Character of Workers**	**700-46**
4.8	**Layout of Work and Surveys**	**700-46**
4.9	**Warranty and Inspection**	**700-47**
4.10	**Defective and Unauthorized Work**	**700-49**
4.11	**Construction Equipment and Plant**	**700-49**
4.12	**Substantial Completion, Final Completion and Final Acceptance**	**700-49**
4.13	**Use Prior to Final Acceptance**	**700-51**

SECTION 5. CONTROL OF MATERIALS

5.1	**Source of Supply and Quality of Materials**	**700-51**
5.2	**City-Furnished Materials**	**700-51**
5.3	**Storage of Materials**	**700-52**
5.4	**Defective Materials**	**700-52**
5.5	**Plant Inspection**	**700-52**
5.6	**Certificates of Compliance**	**700-52**
5.7	**State Specification Numbers**	**700-53**
5.8	**Testing**	**700-53**

SECTION 6. LEGAL RELATIONS AND RESPONSIBILITY

6.1	**Laws to be Observed**	**700-54**
6.2	**Labor Discrimination**	**700-54**
6.3	**Employment of Labor**	**700-55**
6.4	**Prevailing Wages**	**700-55**
6.5	**Hours of Labor and Work**	**700-56**
6.6	**Apprentices**	**700-56**
6.7	**Permits and Licenses**	**700-56**
6.8	**Patents and Copyrights**	**700-57**
6.9	**Public Safety and Traffic Control**	**700-57**
6.10	**Accident Prevention**	**700-58**
6.11	**Explosives and Stream Pollution**	**700-58**
6.12	**Fire Protection Plan**	**700-58**
6.13	**Interference with Fire Hydrants, Highways and Fences**	**700-59**
6.14	**Preservation of Property**	**700-59**
6.15	**Contractor's Responsibility for Work**	**700-59**
6.16	**Indemnification**	**700-59**
6.17	**Payment of Taxes**	**700-60**
6.18	**Cooperation with Others**	**700-60**
6.19	**Property Rights in Materials**	**700-61**
6.20	**Rights in Land and Improvements**	**700-61**
6.21	**Title to Materials Found on the Work**	**700-61**
6.22	**Trespass**	**700-61**
6.23	**Subcontracting**	**700-61**
6.24	**Tunnel Construction Safety**	**700-62**
6.25	**Cultural Resources**	**700-62**
6.26	**Sound Control**	**700-62**
6.27	**Site Security**	**700-63**
6.28	**Public Facilities**	**700-63**
6.29	**Legal Actions Against the City**	**700-64**
6.30	**Limit of Liability**	**700-64**

SECTION 7. PROSECUTION AND PROGRESS OF WORK

7.1	**Assignment**	**700-64**
7.2	**Notice to Proceed**	**700-64**
7.3	**Commencement of Work**	**700-64**
7.4	**Work Progress Schedule**	**700-64**
7.5	**Temporary Suspension of Work**	**700-70**
7.6	**Liquidated Damages**	**700-70**
7.7	**Termination of Control**	**700-70**
7.8	**Termination of Contract for Cause**	**700-70**
7.9	**Termination of Contract for Convenience**	**700-71**
7.10	**Contractor's Cost Data**	**700-72**
7.11	**Coordination with Utilities**	**700-73**
7.12	**Temporary Facilities**	**700-74**

7.13	**Project Record Documents**	**700-74**
7.14	**Preconstruction Conference**	**700-78**
7.15	**Weekly Progress Meeting**	**700-78**
7.16	**Right of Way Delays**	**700-79**
SECTION 8.	**MEASUREMENT AND PAYMENT**	
8.1	**Measurement of Quantities**	**700-80**
8.2	**Deductions from Payments**	**700-80**
8.3	**Progress Payment**	**700-80**
8.4	**Final Payment**	**700-81**
8.5	**Scope of Payment**	**700-81**
8.6	**Substitution of Securities in Lieu of Retention**	**700-81**
8.7	**Effect of Payment**	**700-82**
SECTION 9.	**CLAIMS BY CONTRACTOR**	
9.1	**General**	**700-82**
9.2	**Procedures**	**700-83**
9.3	**Claim Format**	**700-83**
9.4	**Mediation**	**700-84**
9.5	**Exclusive Remedy**	**700-84**

END OF TABLE OF CONTENTS

ABBREVIATIONS AND DEFINITIONS

Whenever in these Specifications and other Contract Documents the following abbreviations and terms or pronouns in place of them are used, the intent and meaning shall be interpreted as follows:

ABBREVIATIONS--General

AA	Aluminum Association
AAN	American Association of Nurserymen
AAP	Affirmative Action Program
AASHTO	American Association of State Highway and Transportation Officials
ACI	American Concrete Institute
AISI	American Iron and Steel Institute
AIEE	American Institute of Electrical Engineers
AISC	American Institute of Steel Construction
AISI	American Iron and Steel Institute
ANSI	American National Standards Institute
APA	American Plywood Association
APHA	American Public Health Association
API	American Petroleum Institute
AREA	American Railway Engineering Association
ASCE	American Society of Civil Engineers
ASHRAE	American Society of Heating, Refrigerating and Air Conditioning Engineers
ASME	American Society of Mechanical Engineers
ASTM	American Society of Testing and Materials
AWG	American Wire Gage
AWPA	American Wood-Preservers' Association
AWS	American Welding Society
AWWA	American Water Works Association
BAAQMD	Bay Area Air Quality Management District
CAEPA	California Environmental Protection Agency
Cal/OSHA	California Occupational Safety and Health Administration
Caltrans	State of California, Department of Transportation
CBC	California Building Code
CCD	Construction Change Directive
CCR	California Code of Regulations
CEC	California Electric Code
CFR	Code of Federal Regulations
CIH	Certified Industrial Hygienist
CLMFI	Chain Link Fence Manufacturers Institute
CO	Change Order
CPM	Critical Path Method
CPUC	California Public Utilities Commission
CRSI	Concrete Reinforcing Steel Institute
CS	Commercial Standards, U.S. Department of Commerce
DHS	California Department of Health Services
DSA	Division of State Architect (formerly known as the Office of the State Architect)
EIA	Electronic Industries Association
EPA	Environmental Protection Agency
FS	Federal Specifications
HSC	California Health and Safety Code
I.D.	Identification
IEEE	Institute of Electrical and Electronics Engineers
IES	Illuminating Engineering Society
JATC	Joint Apprenticeship Training Committee
JV	Joint Venture
LBE	Local Business Enterprise

M.I.	Middle Initial
M/WBE	Minority and/or Woman-Owned Business Enterprise
MBE	Minority Business Enterprise
MIA	Masonry Institute of America
MSDS	Material Safety Data Sheet
NBS	National Bureau of Standards
NEC	National Electric Code
NEMA	National Electrical Manufacturers Association
NESC	National Electrical Safety Code
NIOSH	National Institute for Occupational Safety and Health
NIST	National Institute of Science and Technology (formerly the National Bureau of Standards)
NFPA	National Fire Protection Association
NSF	National Sanitation Foundation
OSHA	Occupational Safety and Health Administration
OSHPD	Office of Statewide Health Planning and Department
PCA	Portland Cement Association
PCI	Prestressed Concrete Institute
PG&E	Pacific Gas and Electric Company
PM	Preventive Maintenance
PR	Proposal Request
PS	Product Standard, U. S. Department of Commerce
RFI	Request for Information
RFIR	Request for Information Reply
RFP	Request for Proposals
RFS	Request for Substitution
RWQCB	California Regional Water Quality Control Council
SAE	Society of Automotive Engineers
SFM	State of California, Office of State Fire Marshal
SJI	Steel Joint Institute
SSPC	Steel Structures Painting Council
SWRCB	California State Water Resources Control Council
TIE	Time Impact Evaluation
UBC	Uniform Building Code
UFC	Uniform Fire Code
UL	Underwriters Laboratories
UMC	Uniform Mechanical Code
UPC	Uniform Plumbing Code
USA	Underground Service Alert
USC	United States Code
WCLIB	West Coast Lumber Inspection Bureau
USEPA	United States Environmental Protection Agency
WCLB	West Coast Lumber Inspection Bureau
WWPA	Western Wood Products Association

ABBREVIATIONS—in Specifications

AWG	American Wire Gauge
Accord	Accordance
Co.	Company
Corp.	Corporation
cm.	centimeter (centimeters)
cu.	Cubic
Div.	Division
dia.	Diameter
EA	each
ft.	foot (feet)
g./gr.	gram (grams)
gal.	gallon (gallons)

gpd	gallons per day
gpm	gallons per minute
hr.	hour
kg.	kilogram (kilograms)
in.	inch (inches)
Inc.	Incorporated
km.	kilometer (kilometers)
Kw	Kilowatt
LS	lump sum
l.	liter (liters)
lbs.	pounds
M/m	meter (meters)
Mfg.	manufacturing
Mg.	milligram (milligrams)
ml./mls.	milliliter (milliliters)
mm.	millimeter (millimeters)
m^2	square meter
m^3	cubic meter
No.	number
o.c.	on centers
O.D.	outside diameter
Psi	pounds per square inch
Psf	pounds per square foot
sq.	square
T & G	tongue and groove
tonne	metric ton (1000 kg.)
U.S.	United States
yd.	yard (yards)

SYMBOLS in Specifications

[for consideration]

:	“shall be” or “shall” - where used within sentences or paragraphs
#1	Number
1#	Pound
&	And
%	Percent
C	Centigrade
F	Fahrenheit
°	Degree
/	per, except where used to combine words; example: power/fuel, and in that case it means and
“	inch (inches)
‘	foot (feet)
@	At

SYMBOLS in Drawings

As indicated therein.

DEFINITIONS

Acceptance: The formal written acceptance by City of a contract which has been completed in all respects in accordance with the Drawings and Specifications and any modifications thereof previously approved.

Addendum or Letter of Clarification: A change in the Specifications or Drawings issued prior to the opening of Bids.

Agency: City.

Alternate: Work added to or deducted from the Base Bid, if accepted by City.

Application for Payment: Written application for monthly or periodic progress or final payment made by Contractor complying with the Contract Documents.

Approved, Directed, Ordered, or Required: Whenever these words or their derivatives are used, it is the intent, unless otherwise clearly stated, that approval or direction by City is indicated.

Approved Equal: Approved in writing by City as being of equivalent quality, utility and appearance.

Asbestos: Any material that contains more than one percent asbestosis and is friable or is releasing asbestos fibers into the air above current action levels established by OSHA or Cal/OSHA.

Attorney or Attorney General: The attorney selected by City.

Bid: The offer or proposal of the Bidder submitted on the proscribed forms setting forth the prices for the Work to be performed.

Bidder: Any individual, firm, partnership, corporation or combination thereof, submitting a proposal for the Work contemplated, acting directly or through a duly authorized representative.

Bidding Documents: All documents comprising the Project Manual (including all documents and specification sections listed on Document 00010 [Table of Contents]), including documents supplied for bidding purposes only and Contract Documents.

Board or Council: City's governing body, its City Council.

Business Day: Any Day other than Saturday, Sunday, and the following days that have been designated as holidays by City. If a holiday falls on a Saturday, the preceding Friday will be the holiday. If a holiday falls on a Sunday, the following Monday will be the holiday.

a. New Year's Day, January 1;
b. Martin Luther King Jr.'s Birthday, third Monday in January;
c. Lincoln's Birthday, February 12;
d. Presidents' Day, third Monday in February;
e. Memorial Day, last Monday in May;
f. Independence Day, July 4;
g. Labor Day, first Monday in September;
h. Veterans' Day, November 11;
i. Thanksgiving Day, as designated by the President;
j. The Day following Thanksgiving Day;
k. Christmas Day, December 25; and
l. Each day appointed by the Governor of California and formally recognized by the Santa Clara County Board of Supervisors as a day of mourning, thanksgiving, or special observance.

By City: Work that will be performed by City or its agents at the City's expense.

By Others: Work that is outside scope of Work to be performed by Contractor under this Contract, which will be performed by City, other contractors, or other means.

Calendar Day: Any Day of the year, without exception.

Change Order: A written instrument prepared by City and signed by City and Contractor, stating their agreement upon all of the following:

a. a change in the Work;
b. the amount of the adjustment in the Contract Sum, if any; and
c. the amount of the adjustment in the Contract Time, if any.

Certified Hazardous Materials Testing Laboratory: A laboratory certified by the California Department of Health Services to perform specific chemical and physical analysis for hazardous materials.

Certified Industrial Hygienist: A professional who is certified by the American Council of Industrial Hygienists as trained to evaluate safety and health hazards and determine safety measures necessary for personnel working under hazardous conditions.

Chief Engineer: The Program Manager selected by City.

City: City of Cupertino, , a Municipal Corporation of the State of California.

City-Furnished, Contractor-Installed: Items furnished by City at its cost for installation by Contractor at its cost under Contract Documents.

City's Representative(s): See Document 00520 (Contract).

Claim: As defined in Section 9 of this Document 00700.

Code: Codes of the State of California, including but not limited to, Government Code, Labor Code, etc.

Concealed: Work not exposed to view in the finished Work, including within or behind various construction elements.

Contract: (Document 00520): Contract is the basic agreement document that binds the parties to construction Work. Contract defines relationships and obligations between City and Contractor and by reference incorporates Standard Provisions, Special Provisions, Drawings and Specifications and contains Addenda and all Modifications subsequent to execution of Contract Documents.

Construction Change Directive (CCD): A letter, signed by the City's Director of Public Works, or his designated representative, directing the Contractor to proceed with additive or deductive changes to the contract when that Work or its value is contested by the Contractor. The Work, as directed by a Construction Change Directive, will be completed under the terms of Force Account as explained in Document 00700, General Conditions.

Construction Equipment: Equipment used for the performance of Work but not incorporated into the project.

Construction Manager: See Document 00520 (Contract) (if this term is used).

Consulting Engineer: See Document 00520 (Contract) (if this term is used).

Contract or Contract Documents: The written agreement between Contractor and City consisting of the Contract Documents as defined in the Document 00520 (Contract).

Contract Modification: Either:

a. a written amendment to Contract signed by Contractor and City; or

b. a Change Order.

Contract Prices: The prices for the Work set forth in the Contract. Contract Price (or Contract Sum) shall mean the aggregate price for all Work set forth in the Contract.

Contract Sum: The sum stated in the Contract and, including authorized adjustments, the total amount payable by City to Contractor for performance of the Work and the Contract Documents. The Contract Sum is also sometimes referred to as the Contract Price or the Contract Amount.

Contract Time: The number of days for Substantial Completion and/or Final Completion the Work including any milestones specifically identified in the Contract.

Contractor: The entity or person entering a contract with City.

Contractor's Employees: Persons engaged in execution of Work under Contract as direct employees of Contractor, as Subcontractors, or as employees of Subcontractors.

Controlling Item of Work: Any feature or combination of features of the Work, which if delayed, will delay the time of completion of a contract. Also known as critical work or critical path work.

County: The County of Santa Clara, State of California.

Day: One calendar day of 24 hours measured from midnight to the next midnight, unless the word "day" is specifically modified to the contrary.

Defective: An adjective which, when modifying the word "Work," refers to Work that is unsatisfactory or unsuited for the use intended, faulty, or deficient, that does not conform to the Contract Documents, or does not meet the requirements of any inspection, reference standard, test or approval referred to in the Contract Documents (including but not limited to approval of samples and "or equal" items), or has been damaged prior to final payment (unless responsibility for the protection thereof has been assumed by City). City is the judge of whether Work is defective.

Department: City.

Director or Director of the Department of Transportation: City's City Public Works Director.

District: City.

Division: City.

Drawings: The official drawings, Working drawings, detail drawings, and supplemental drawings, or reproductions thereof, which show the location, character, dimensions, and details of the Work to be done, and which are to be considered as part of the Contract.

Engineer or Engineer of the Department of Transportation: City of Cupertino and any designated person or entity by City

Equal: Equal in opinion of City. Burden of proof of equality is responsibility of Contractor.

Equipment: Equipment incorporated or to be incorporated into the project.

Exposed: Work exposed to view in the finished Work, including behind louvers, grilles, registers and various other construction elements.

Field Authorization (FA): An authorization issued by City to Contractor to allow additive or deductive work to proceed when Change Order process time may delay the Work.

Final Acceptance: City's acceptance of the Work as satisfactorily completed in accordance with Contract Documents.

Final Completion: Shall be achieved when the entire work is complete, except for minor punch list items, as determined by City.

Fixed Costs: Any necessary labor, material, and equipment costs directly expended on the item or items under consideration which remain constant regardless of the quantity of Work done.

Force Account: Work directed to be performed without prior agreement as to lump sum or unit price cost thereof, and which is to be billed at cost for labor, materials, equipment, taxes, and other costs, plus a specified percentage for overhead and profit.

Furnish: Supply only, do not install.

Hazardous Material: (A) Any substance, product, waste or other material of any nature whatsoever which is or becomes listed, regulated, or addressed pursuant to any federal, state or local statute, law, ordinance, resolution, code, rule, regulation, order or decree regulating, relating to, or imposing liability (including, but not limited to response, removal, and remediation costs) or standards of conduct or performance concerning any hazardous, toxic, explosive, corrosive, flammable, infectious, radioactive, carcinogenic, mutagenic or as otherwise dangerous waste, substance or material; (B) any substance, product, waste, or other material of any nature whatsoever whose presence in and of itself may give rise to liability under any of the above statutes or under any statutory or common law theory based on negligence, trespass, intentional tort, nuisance, strict or absolute liability or under any reported decisions of a state or federal court; (C) any substance without limitation, which contains petroleum or crude oil, including but not limited to, petroleum and petroleum products.

Hazardous Waste: Any substance or material, as defined in the California Hazardous Waste Control Act, Health and Safety Code Section 25, or the Resource Conservation and Recovery Act, 42 U.S.C. 6901 et seq.

Indicated: Shown or noted on the Drawings.

Install: Install or apply only, do not furnish.

Laboratory: The independent testing organization or organizations selected by City.

Latent: Not apparent by reasonable inspection, including but not limited to, the inspections and research required as a condition to bidding under the General Provisions.

Law: Unless otherwise limited, all applicable laws including without limitation all federal, state, and local laws, statutes, standards, rules, regulations, ordinances, and judicial and administrative decisions

Liquidated Damages: The amount stated in Document 00520 (Contract), to be paid to City or to be deducted from any payments due or to become due Contractor as provided in the Contract Documents.

Material: This word shall be construed to embrace machinery, manufactured articles, materials of construction (fabricated or otherwise), and any other classes of material to be furnished in connection with Contract, except where a more limited meaning is indicated by context.

Milestone: A principal event specified in Contract Documents relating to an intermediate completion date or time prior to Substantial Completion of all Work.

Modification: Same as Contract Modification.

Not in Contract: Work that is outside the scope of Work to be performed by Contractor under Contract Documents – shown as NIC.

Notice of Completion: Shall have the meaning provided in California Civil Code Section 3093, and any successor statute.

Off Site: Outside geographical location of the Project.

Northern Region: City.

Office of Materials and Foundations: Laboratory.

Office of Structure Design: When specifications require working drawings to be submitted to the Office of Structure Design, the drawings shall be submitted to the Resident Engineer.

***Owner*:** City.

Partial Utilization: Use by City of a substantially completed part of the Work for the purpose for which it is intended (or a related purpose) prior to Substantial Completion of all of the Work.

PCBs: Polyclorinated byphenyls.

Personnel Protection: Equipment and procedures which minimize human exposure to regulated materials, hazardous materials, hazardous wastes, or unsafe situations.

Phase: A specified portion of the Work (if any) specifically identified as a Phase in Document 00520 (Contract).

Plans, Construction Plans: The Drawings.

Product Data: That information (including brochures, catalogue cuts, MSDS, etc.) supplied by the vendor describing the technical and commercial characteristics of the supplier equipment or materials, and accompanying commercial terms such as warranties, instructions and manuals.

Progress Report: A periodic report submitted by Contractor to City with progress payment invoices accompanying actual work accomplished to the Progress Schedule. See Document 00700 (General Conditions).

Project: The erection, construction, alteration, repair, or improvement to be accomplished under the Contract and performing the Work.

Project Float: Neither City nor Contractor owns float. The Project owns the float. As such, liability for delay of any Substantial Completion or Final Completion date rests with the party whose actions, last in time, actually cause delay to a Substantial Completion or Final Completion date.

A. For example, in the event of unexcused delay by Party A and Party B, and if Party A uses some, but not all of the float and Party B later uses remainder of the float as well as additional time beyond the float, Party B shall be liable for the time that represents a delay to the Substantial Completion date.

B. Under this scenario, Party A would not be responsible for the time since it did not consume all of the float and additional float remained; therefore, the Substantial Completion Date was unaffected.

Project Manual: Project Manual consists of Bidding Requirements, Contract, Bonds, Certificates, Standard Provisions and Special Provisions, and Specifications.

Project Record Documents: All Project deliverables required under Section 00700, including without limitation, as-built drawings, operations and maintenance manuals Installation, Operation, and Maintenance Manuals, and Machine Inventory Sheets.

Provide: Furnish and install.

Reasonable Accuracy: Within the tolerances as shown on the Drawings or indicated in the Specifications.

Regulated Material: Any substance or combination of substances for which federal, state, or local regulations require special management, storage, disposal or handling practices. This shall include, but not be limited to, materials defined as: Hazardous Materials and Waste; Designated Wastes (CCR, Title 23, Section 23-2522); and Special Waste (CCR, Title 22, Section 22-66195).

Request for Information ("RFI"): A document prepared by Contractor requesting information regarding the Project or Contract Documents. The RFI system is also a means for City to submit Contract Document clarifications or supplements to Contractor.

Request for Proposals ("RFP"): A document issued by City to Contractor whereby City may initiate changes in the Work or Contract Time as provided in Contract Documents.

Request for Substitution ("RFS"): A document prepared by Contractor requesting substitution of materials as permitted and to the extent permitted in Contract Documents.

RFI-Reply: A document consisting of supplementary details, instructions, or information issued by City that clarifies or supplements Contract Documents, and with which Contractor shall comply. RFI-Replies do not constitute changes in Contract Sum or Contract Time except as otherwise agreed in writing by City. RFI-Replies will be issued through the RFI administrative system.

Remediation: Restoration of the contaminated soil, groundwater, or other materials to its pre-contaminated level or to a level acceptable to City and local, state and federal agencies.

***Resident Engineer*:** Authorized representative for the City. Also identified as Engineer.

Responsible Bidder: A bidder who has demonstrated the attribute of trustworthiness, as well as quality, fitness, capacity, and experience to satisfactorily perform the Work.

Samples: Physical examples of materials, equipment, or workmanship that are representative of some portion of the Work and which establish the standards by which such portion of the Work will be judged.

Section: A numbered portion of a title section of the Specifications.

Shop Drawings: All drawings, diagrams, illustrations, schedules and other data or information which are specifically prepared or assembled by or for Contractor and submitted by Contractor to illustrate some portion of the Work.

Shown: As indicated on Drawings.

Site: The particular geographical location of Work performed pursuant to Contract Documents.

Specifications: The directions, provisions and requirements contained in the Contract Documents, including but not limited to, the State Specifications, Special Provisions, and Technical Provisions.

Standard Plans: The Standard Plans, Metric, of the State of California Department of Transportation, July 2004.

State: City.

***State Furnished Materials*:** Materials furnished by City.

State of California: City except where in the context of the Contract Documents it is clear the reference is to the State of California.

State Specifications (or Standard Specifications): See Section 1.05 in this Document 00700.

Special Conditions or Special Provisions: Document 00800 (Supplemental General Conditions) and Document 00805 (Supplemental Conditions – Hazardous Materials) (if included).

Standard Provisions: Document 00700 (General Conditions)

Subcontractor: An entity or person contracting with Contractor or another subcontractor to perform any portion of Work.

Substantial Completion: The Work (or a specified part thereof) has progressed to the point where, in the opinion of City as evidenced by a Certificate of Substantial Completion and can be utilized for the purpose for which it is intended.

Supplemental Instruction: A written directive from City to Contractor ordering alterations or modifications that do not result in change in Contract Sum or Contract Time, and do not substantially change Drawings or Specifications.

Supplier/Vendor: A person or entity that has a direct contract with the Contractor or a Subcontractor to provide, fabricate, deliver or install materials, products or assemblies.

Technical Provisions: Provisions and or clauses specific to the Work of the Project, generally found in Sections 10 thru 95 of the State Specifications.

Testing and Special Inspection Agency: An independent entity engaged by City to inspect and/or test the workmanship, materials, or manner of construction of buildings or portions of buildings, to determine if such construction complies with the Contract Documents and applicable codes.

Ton: 2,000 pounds avoirdupois.

Underground Facilities: All pipelines, conduits, ducts, cables, wires, manholes, vaults, tanks, tunnels or other such facilities or attachments, and any encasements containing such facilities that have been installed underground to furnish any of the following services or materials: Electricity, gases, chemicals, steam, liquid petroleum products, telephone or other communications, cable television, sewage and drainage removal, traffic or other control systems or water.

Unit Price Work: Shall be the portions of the Work for which a unit price is provided in Document 00520 (Contract).

Work: The entire completed construction of the Work or of the various separately identifiable parts thereof required to be furnished under the Contract Documents within the Contract Time. Work includes and is the result of performing or furnishing administrative services, labor and professional services, furnishing and incorporating materials and equipment

into the construction, and performing or furnishing construction services and furnishing documents, all as required by the Contract Documents including the Plans and Specifications. Wherever the word "work" is used, rather than the word "Work", it shall be understood to have its ordinary and customary meaning.

Work Day: All Days, other than Saturdays, Sundays, and public holidays, unless specifically modified to the contrary.

Wherever words "as directed," "as required," "as permitted," or words of like effect are used, it shall be understood that direction, requirements, or permission of City is intended. Words "sufficient," "necessary," "proper," and the like shall mean sufficient, necessary, or proper in judgment of City. Words "approved," "acceptable," "satisfactory," "favorably reviewed," or words of like import, shall mean approved by, or acceptable to, or satisfactory to, or favorably reviewed by City.

Wherever the word "may" or "ought" is used, the action to which it refers is discretionary. Wherever the word "shall" or "will" is used, the action to which it refers is mandatory.

SECTION 1. INTERPRETATION OF CONTRACT

1.1 Precedence of Contract

In resolving conflicting requirements between the Contract Documents order of precedence shall be as follows:

A Change orders
B Addenda or Letters of Clarification
C Document 00520 (Contract)
D Special Conditions
E Technical Specifications
F Drawings
G General Conditions
H State Specifications
I State Standard Plans

With reference to the Drawings:

A Figures govern over scaled dimensions
B Detail drawings govern over general drawings

1.2 Clarification of Contract

Should it appear that the work to be done or any of the matters relative thereto is not sufficiently detailed or explained in the Specifications or on the Drawings, or if Contractor discovers during the course of the Work any discrepancies between the Contract Drawings and conditions in the field, or any errors or omissions in the Contract or in the layout given by stakes, points, or instructions, the bidder or Contractor shall apply in writing to City for such further explanations as may be necessary and shall conform to them as part of the Contract. Any work done after such discovery until authorized by City, will be done at Contractor's risk.

All corrections of readily apparent errors or omissions in the Contract may be made by City when such corrections are necessary for the proper fulfillment of their intention as construed by City. The misplacement, addition, or omission of any word, letter, figure, or punctuation mark which has no substantive legal effect will in no way change the due spirit, intent, or meaning of Contract.

1.3 Contract Documents Complementary

Any part of the Work not shown on the Drawings or described in these Specifications but which is reasonably or ordinarily implied by either, shall be furnished and installed by Contractor as if fully described in these Specifications and shown upon the Drawings. All disputes shall be administered under Section 9 herein.

1.4 Contract Interpretation

In the event of any doubt or questions arising respecting the true meaning of the Contract, reference shall be made in writing to City, whose decision thereon shall be final.

1.5 State Specifications

The Work set forth in these Specifications shall be accomplished in accordance with appropriate provisions of construction details, Section 10 to Section 95, inclusive, of the Standard Specifications of the State of California, Business, Transportation And Housing Agency, Department of Transportation, Latest Eddition. These Specifications are herein referred to as the State Specifications (or Standard Specifications) and are by reference made a part of these Specifications the same as though set out in full.

1.6 Conflicts Involving State Specifications

In the event of conflict between the State Specifications and the Standard, Special, or Technical Provisions of these Specifications or the Drawings or any Contract Document other than the State Specifications, then such non-State Specification shall have precedence.

SECTION 2. BONDS AND INSURANCE

2.1 Contractor's Insurance

A General

Contractor shall not perform Work under this Contract unless all insurance required by this Section has been obtained; and such insurance and insurers have been approved by City; and such insurance remains in full force and effect. Approval of insurance by City shall neither relieve nor decrease the liability of Contractor hereunder. Any delay in performing Work caused by Contractor's failure to comply with the insurance requirements specified in these Specifications, is the responsibility of Contractor. Failure by Contractor to maintain all required insurance at all times during the performance of this Contract, and until Final Acceptance by City, shall constitute a material breach of this Contract and shall not be a basis for a time extension.

For insurance requirements and forms see Document 00821 and 00530.

B Workers' Compensation and Liability Insurance

Without limiting any of the other obligations or liabilities of Contractor, Contractor shall, at Contractor's sole cost and expense, keep in force at all times during the performance of this Contract, and until Acceptance by City, the following minimum insurance coverages, unless otherwise specified in the Special Provisions:

For insurance requirements and forms see Document 00821 and 00530.

C Insurance on Work and Materials

Contractor shall secure and maintain such direct damage insurance against such perils as Contractor may deem necessary to protect the Work called for in this Contract including Work completed, material in place or to be used in the performance of this Contract and such other miscellaneous items as may be necessary to the performance of this Contract.

For insurance requirements and forms see Document 00821 and 00530.

D Certificates of Insurance

Contractor shall furnish certificates of insurance to City for all required insurance coverages.

For insurance requirements and forms see Document 00821 and 00530.

2.2 Contractor's Bonds

A Filing of Bonds

At or before the date indicated in Document 00200 (Instructions to Bidders), Contractor shall file with City the following bonds:

1. Corporate surety bond, in the form of Document 00610 (Construction Performance Bond), in the penal sum of 100% of Contractor's Bid as accepted, to guarantee faithful performance of the Work; and

2. Corporate surety bond, in the form of Document 00620 (Construction Labor and Material Payment Bond), in the penal sum of 100% of Contractor's Bid as accepted, to guarantee payment of wages for services engaged and of bills contracted for materials, supplies, and equipment used in performance of Contract Documents.

3. The Payment bond will be released six (6) months after the recording of the Notice of Completion, and the Faithful Performance shall be reduced by ninety percent (90%) at the recording of the Notice of Completion. The remaining ten percent (10%) will be released at the end of one (1) year from acceptance of the project provided any deficiencies in the work have been corrected.

B Surety Qualifications

Sureties shall be satisfactory to City. Corporate sureties on these bonds and on bonds accompanying Bids shall be duly licensed to do business in the State of California and shall have an A.M. Best Company financial rating of B+,VII or better.

SECTION 3. SCOPE OF WORK

3.1 Work to be Done

The Work to be done consists of furnishing all labor, methods or processes, implements, tools, machinery, construction equipment, materials of any kind, and installed manufactured equipment, except as otherwise specified herein, to be furnished by City or from sources provided by City, which are required to construct in a good and worker-like manner all the work herein specified. The intent of the specifications is to describe the details for the construction and completion of the work which Contractor undertakes to perform in accordance with the terms of the contract. Where the specifications describe portions of the work in general terms, but not in complete detail, it is understood that only the best general practice is to prevail and that only materials and workmanship of first class quality are to be used.

Bidder should take particular notice that any and all items of Work, called for in the Construction Documents, but not included in a description of any specific bid item, shall be considered as included in one (1) or more of the bid items and that no additional compensation for those items of Work, beyond the Base Bid, will be allowed. Work of this nature includes, but is not limited to, such items as flagmen, water, all safety requirements, or work and materials required to provide public convenience and safety, barricades, lights, vehicular detours, and pedestrian walkways.

See Document 00800 for more detail of work and requirements.

3.2 Cleaning

Before final inspection Contractor shall clean the premises, and unless otherwise specified remove all rubbish, excess materials, false work, temporary structures, and equipment. All parts of the Work shall be left in a neat and presentable condition to the satisfaction of City. Contractor shall perform final cleanup in phases whenever the work is completed in phases, and/or turned over to City in phases, and/or where the Work is exposed. Additionally, all areas of the work may in any manner interface with the public shall be maintained in a neat, orderly, sanitary, and safe condition, and contractor shall at all times maintain the work area in a neat and orderly condition.

Nothing herein, however, shall require Contractor to remove warning, regulatory, and guide signs prior to Final Acceptance by City.

A Progress Cleaning

Contractor shall perform periodic cleaning to ensure that any streets and other City and public properties are maintained free from accumulation of waste materials, dust, mud, and debris.

Where required, Contractor shall wet down surfaces to lay dust and prevent the blowing of dust to nearby residences or public properties.

Contractor shall keep all streets clean and free of dust, mud, and debris resulting from Contractor's operations. Daily cleanup throughout the job will be necessary as Contractor progresses with its Work, but extra attention to cleanup shall be made prior to weekends and holidays. Without limiting the foregoing, Contractor shall remove trench spoil along traveled ways daily; grade and vacuum broom surfaces initially where applicable and later water flush with high-pressure sprays, being careful to avoid downstream contamination.

All dust, mud, spoils, and construction debris shall be removed daily from all roadways, ditches, shoulders, and private property (fills or spoils placed on private property at private property owner's written request excepted).

Disposal of Materials:

1. As part of the scope of Work included within the Contract Sum, Contractor shall be fully responsible for disposing of all construction debris, dirt and spoils resulting from the Work.
2. All waste materials, debris, dirt and rubbish shall be disposed of at sites to be chosen by Contractor in accordance with applicable local, state, and federal regulations.
3. Contractor is cautioned that the County of Santa Clara and cities within the county have regulations governing the disposal of rubble, broken pavement, and similar materials.
4. Contractor shall become familiarized with the requirements of the agency having jurisdiction over any contemplated disposal site and shall comply with all such requirements.

All excess soil from performance of Work shall be disposed at sites to be chosen by Contractor in accordance with applicable local, state, and federal regulations. If Contractor elects to dispose of soil on any private property, prior to any dumping, a letter allowing such dumping shall be obtained from the property owner and presented to City. Contractor is advised that the property owner is required to obtain a fill permit from the applicable government agency(ies). In addition, placement of fill in wetland areas is subject to permit procedures of the US Army Corps of Engineers. At the completion of Work, a letter from each affected property owner will be required releasing Contractor**,** Santa Clara County, City and any City consultant from future liability.

If Contractor does not properly clean the Site, in the opinion of City, then City shall have the option of using outside equipment to perform the cleanup and such cost will be withheld from the Contract Sum.

B Final Cleaning

Contractor shall execute final cleaning prior to final inspection, using only properly skilled workers.
Remove grease, dust, dirt, stains, labels, fingerprints, and other foreign materials from exposed finished surfaces.
Repair, patch, and touch up marred surfaces to match adjacent finishes.
Clean Site; mechanically sweep paved areas.
Remove waste and surplus materials, rubbish, and construction facilities from Site.

3.3 Change in Work

A General

City may, at any time or from time to time, order additions, deletions, or revisions in the Work, any portion of the Work, unit price item, or the Contract Time. These changes will be set forth in a contract change order which will specify, in addition to the work to be done in connection with the change made, the adjustment of Contract Time, if any, and the basis of compensation for that work. A contract change order will not become effective until approved by City. Upon receipt of an approved contract change order, Contractor shall proceed with the ordered work. If ordered in writing by the City, Contractor shall proceed with the work so ordered prior to actual receipt of an approved contract change order therefore. In those cases, City will, as soon as practicable, issue an approved contract change order for the ordered work and, if the parties cannot agree, then the contract claims procedure in Section 9 shall apply. When the compensation for an item of work is subject to adjustment,

Contractor shall, furnish City with adequate detailed cost data for that item of work showing actual costs incurred with direct costs, indirect costs, and any overhead claims. If Contractor requests an adjustment in compensation for an item of work as provided herein, the cost data shall be submitted with the request.

Any change in scope of Work or deviation from Contract Documents including, without limitation, extra work, or alterations or additions to or deductions from the original Work, shall not invalidate the original Contract, and shall be performed under the terms of the Contract Documents.

Only Contractor or City may initiate changes in scope of Work or deviation from Contract Documents.

Contractor may only initiate changes by submitting RFIs, Notice of Concealed or Unknown Conditions, or Notice of Hazardous Waste Conditions.

RFIs shall be submitted to seek clarification of or request changes in the Contract Documents.
Notices of Concealed or Unknown Conditions shall be submitted in accordance with Document 00700 (General Conditions).
Notices of Hazardous Waste Conditions shall be submitted in accordance with Document 00700 (General Conditions).

Contractor shall be responsible for its costs to implement and administer RFIs throughout the Contract duration. Regardless of the number of RFIs submitted, Contractor shall not be entitled to additional compensation. Contractor shall be responsible for both City and it's Engineer's administrative costs for answering RFIs where the answer could reasonably be found by reviewing the Contract Documents, as determined by City; at City's discretion, such costs may be deducted from progress payments or final payment.

City may initiate changes by issuing a Supplemental Instruction, which may revise, add to or subtract from the Work.

City may initiate changes in the Work or Contract Time by issuing RFPs to Contractor. Such RFPs will detail all proposed changes in the Work and request a quotation of changes in Contract Sum and Contract Time from Contractor.

City may also, by Construction Change Directive ("CCD"), order changes in the Work within the general scope of the Contract consisting of additions, deletions, or other revisions, the Contract Sum and Contract Time being adjusted accordingly. A CCD shall be used in the absence of total agreement on the terms of a Change Order and may, upon notice, consist of a Change Order executed by City only.

B Procedures

1 Cost Proposal and Procedures:

Whenever Contractor is required to prepare a Cost Proposal, and whenever Contractor is entitled to submit a Cost Proposal and elects to do so, Contractor shall prepare and submit to City for consideration a Cost Proposal using the forms approved by the City. All Cost Proposals must contain a complete breakdown of costs of credits, deducts and extras; itemizing materials, labor, taxes, overhead and profit. All Subcontractor Work shall be so indicated. Individual entries on the Cost Proposal form shall be determined as provided in this section. After receipt of a Cost Proposal with a detailed breakdown, City will act promptly thereon.

If City accepts a Cost Proposal, City will prepare Change Order for City and Contractor signatures.

If Cost Proposal is not acceptable to City because it does not agree with cost and/or time included in Cost Proposal, City will submit in a response what it believes to be a reasonable cost and/or adjustment, if any. Except as otherwise provided in this Document, Contractor shall have seven Days in which to respond to City with a revised Cost Proposal.

When necessity to proceed with a change does not allow the City sufficient time to conduct a proper check of a Cost Proposal (or revised Cost Proposal), City may order Contractor to proceed on basis to be determined at earliest practical date. In this event, value of change, with corresponding equitable adjustment to Contract, shall not be more than increase or less than decrease proposed.

2 Request for Information (RFI):

Whenever Contractor requires information regarding the Project or Contract Documents, or receives a request for information from a Subcontractor, Contractor may prepare and deliver an RFI to City. Contractor shall use RFI format provided by City. Contractor must submit time critical RFIs at least 30 days before scheduled start date of the affected Work activity. Contractor shall reference each RFI to an activity of Progress Schedule and shall note time criticality of the RFI, indicating time within which a response is required. Contractor's failure to reference RFI to an activity on the Progress Schedule and note time criticality on the RFI shall constitute Contractor's waiver of any claim for time delay or interruption to the Work resulting from any delay in responding to the RFI.

City will respond within seven Days from receipt of RFI with a written response to Contractor. Contractor shall distribute response to all appropriate Subcontractors. RFI received after 12:00 pm will be considered as received the following day, for Fridays, the following day will be considered to be Monday.

If Contractor is satisfied with the response and does not request change in Contract Sum or Contract Time, then the response shall be executed without a change.

If Contractor believes the response is incomplete, Contractor shall issue another RFI (with the same RFI number with the letter "A" indicating if it is a follow-up RFI) to City clarifying original RFI. Additionally, City may return RFI requesting additional information should original RFI be inadequate in describing condition.

If Contractor believes that the response results in change in Contract Sum or Contract Time, Contractor shall notify City in writing within seven Days after receiving the response. If City disagrees with Contractor, then Contractor may give notice of intent to submit a Claim as described in this Document and submit its Claim within 30 days. If City agrees with Contractor, then Contractor must submit a Cost Proposal within 21 Days of receiving the response to the RFI. Contractor's failure to deliver either the foregoing notice and Claim or Cost Proposal by the respective deadlines stated in the foregoing sentences shall result in waiver of the right to file a Cost Proposal or Claim.

3 Field Authorization (FA):

A letter issued and signed by the City's Director of Public Works, or his designated representative, authorizing the Contractor to proceed with additive or deductive changes to the contract, exclusive of time extensions, which value does not exceed $50,000, which will become a part of a subsequent Contract Change Order. The Field Authorization is issued during the course of construction when it is known or believed that the changes in the Work being requested cannot be processed in a timely way as a Contract Change Order without risk of causing a delay to the project. The contractor cannot include work performed under a Field Authorization in an Application for Payment until the Field Authorization is fully incorporated into an approved Contract Change Order.

4 Supplemental Instruction:

City may issue Supplemental Instruction to Contractor.

If Contractor is satisfied with Supplemental Instruction and does not request change in Contract Sum or Contract Time, then Supplemental Instruction shall be executed without a Change Order.

If Contractor believes that Supplemental Instruction results in change in Contract Sum or Contract Time, then Contractor must submit a Cost Proposal to City within 21 Days of receiving the Supplemental Instruction.

5 Construction Change Directives (CCD):

If at any time City believes in good faith that a timely Change Order will not be agreed upon using the foregoing procedures, City may issue a CCD with its recommended cost and/or time adjustment. Upon receipt of CCD, Contractor shall promptly proceed with the change of Work involved and concurrently respond to City's CCD within 10 Days.

Contractor's response must be any one of following:

Return CCD signed, thereby accepting City's response, time and cost.
Submit a (revised if applicable) Cost Proposal with supporting documentation (if applicable, reference original Cost Proposal number followed by letter A, B, etc. for each revision), if City so requests.
Give notice of intent to submit a Claim as described in this Document and submit its Claim with 30 days.

If the CCD provides for an adjustment to the Contract Sum, the adjustment shall be based on one of the following methods:

Mutual acceptance of a lump sum properly itemized and supported by sufficient substantiating data to permit evaluation.
Unit prices stated in the Contract Documents or subsequently agreed upon.
Cost to be determined in a manner agreed.

CCD signed by Contractor indicates the agreement of Contractor therewith, including adjustment in Contract Sum and Contract Time or the method for determining them. Such agreement shall be effective immediately and shall be recorded as a Change Order.

If Contractor does not respond promptly or disagrees with the method for adjustment in the Contract Sum, the method and the adjustment shall be determined by City on the basis of reasonable expenditures and savings of those performing the Work attributable to the change including, in case of an increase in the Contract Sum, a reasonable allowance for overhead and profit. If the parties still do not agree on the price for a CCD, Contractor may file a Claim. Contractor shall keep and present, in such form as City may prescribe, an itemized accounting together with appropriate supporting data. Unless otherwise provided in the Contract Documents, costs for the purposes of this paragraph shall be limited to those provided in this Section.

Pending final determination of cost to City, amounts not in dispute may be included in Applications for Payment. The amount of credit to be allowed by Contractor to City for a deletion or change which results in a net decrease in the Contract Sum shall be actual net cost as confirmed by City. When both additions and credits covering related Work or substitutions are involved in a change, the allowance for overhead and profit shall be figured on the basis of net increase, if any, with respect to that change.

6 City Requested RFP:

Contractor shall furnish a Cost Proposal within 21 Business Days of City's RFP. Upon approval of RFP, City will issue a Change Order directing Contractor to proceed with extra Work. If the parties do not agree on the price for an RFP, City may either issue a CCD or decide the issue per the claims section of this Document. Contractor shall perform the changed Work notwithstanding any claims or disagreements of any nature.

7 Differing Site Conditions:

Contractor shall submit Notices of Differing Site Conditions to resolve problems regarding differing underground Site conditions encountered in the execution of the Work pursuant to section 3 of this Document, which shall govern. If City determines that a change in Contract Sum or Contract Time is justified, City will issue RFP or CCD.

8 Hazardous Waste Conditions:

Contractor shall submit Notices of Hazardous Waste Conditions to resolve problems regarding hazardous materials encountered in the execution of the Work pursuant to this Document, which shall govern. If City determines that a change in Contract Sum or Contract Time is justified, City will issue RFP or CCD.

9 All Changes:

Documentation of Change in Contract Sum and Contract Time:

Contractor shall maintain detailed records of Work performed on a time-and-material basis. Contractor shall document each proposal for a change in cost or time with sufficient data to allow evaluation of the proposal.

Contractor shall, on request, provide additional data to support computations for:

a. Quantities of products, materials, labor and equipment.

b. Taxes, insurance, and bonds.

c Overhead and profit.

d Justification for any change in Contract Time and new Progress Schedule showing revision due, if any.

e. Credit for deletions from Contract, similarly documented.

f. Contractor shall support each claim for additional costs, and for Work performed on a cost-and-percentage basis, with additional information including:

(1) Credit for deletions from Contract, similarly documented.

(2) Origin and date of claim.

(3) Dates and times Work was performed and by whom.

(4) Time records and wage rates paid.

(5) Invoices and receipts for products, materials, equipment and subcontracts, similarly documented.

10 Correlation of Other Items:

Contractor shall revise Schedule of Values and Application for Payment forms to record each authorized Change Order or CCD as a separate line item and adjust the Contract Sum as shown thereon prior to the next monthly pay period.

Contractor shall revise the Progress Schedules prior to the next monthly pay period.

Contractor shall enter changes in Project Record Documents prior to the next monthly pay period.

11 Responses:
For all responses for which the Contract Documents, including without limitation this Document, do not provide a specific time period, recipients shall respond within a reasonable time.

C Allowable Quantity Variations

Increases or decreases in the quantity of a Contract item of Work for unit price items will be determined by comparing the actual pay quantity of an item of Work with the approximate quantity in the listing of the bid items contained in the Bid.

If the actual pay quantity of an item of Work varies from the approximate quantity by 25 percent or less, payment will be made for the actual quantity of Work performed at the Contract unit price listed in the Bid.

If the actual pay quantity of an item of Work varies from the approximate quantity by more than 25 percent, in the absence of an executed Contract Change Order specifying the compensation to be paid, the compensation payable to Contractor will be determined in accordance with this Section.

1. **Increases of More Than 25 Percent**: If the actual pay quantity of an item of Work exceeds the approximate quantity by more than 25 percent, the amount of Work in excess of 125 percent of the approximate quantity will be paid for by adjusting the Contract unit price. Such adjustment of the Contract unit price will be the positive or negative difference between the Contract unit price and the actual unit cost of the total pay quantity of the item. At the sole option of City, the actual unit cost of the Work involved in such excess will be determined in accordance with Section 3.4 (by mutual acceptance of a lump sum amount) or Section 3.4 (cost of Work, based on time and materials).

   If the cost of an item of Work includes fixed costs or overhead, the fixed costs will be deemed to have been recovered by Contractor by the payments made for 125 percent of the approximate quantity at the Contract unit price for the item and in computing the actual unit cost, the fixed costs will be excluded.

   When the compensation payable for the quantity of Work performed in excess of 125 percent of the approximate quantity is less than $5,000 at the Contract unit price, no adjustment in the Contract unit price will be made unless requested in writing by Contractor within 14 days from the date Contractor became aware, or should have reasonably become aware, of the increase in quantity.

2. **Decreases of More Than 25 Percent**: If the actual pay quantity of an item of Work is less than 75 percent of the approximate quantity, an adjustment in compensation will not be made unless Contractor makes a request in writing within 14 days from the date Contractor became aware, or should have reasonably become aware, of the decrease in quantity. If Contractor makes a request, the actual pay quantity of said item of Work performed will be paid for by adjusting the Contract unit price. Such adjustment of the Contract unit price will be the positive or negative difference between the Contract unit price and the actual unit cost of the total pay quantity of the item, including fixed costs. At the sole option of City, payment for the actual quantity of Work will be made by mutual acceptance of a lump sum amount or cost of Work based on time and materials in accordance with Section 3.4.

3. Payment for the actual pay quantity of such item of Work will in no case exceed the payment which would have been made for the performance of 75 percent of the approximate quantity of such item at the Contract unit price.

B Eliminated Items:

If any Contract item of the Work is eliminated in its entirety, payment will be made to Contractor for the actual cost incurred in connection with the eliminated Contract item if incurred prior to the date of notification in writing by City of such elimination.

If acceptable material is ordered by Contractor for an eliminated Contract item prior to the date of notification of such elimination by City, and if orders for such material cannot be canceled, payment for such material will be made at the actual cost to Contractor. In such case, the material shall become the property of City. If the materials can be returned to the vendor and if City so directs, the material shall be returned and Contractor will be paid for the actual cost for returning the material.

The actual costs to be paid by City to Contractor in accordance with this Section will be computed based on Time and Materials in accordance with Section 3.4.

C. Alternative Contract Items

Items identified as Alternative in the Bid may be deleted entirely or in part at the sole discretion of City. The unit price of an Alternative contract item shall not be subject to adjustment due to any increase or decrease in actual quantity.

See Document 00800 for more detail.

D. Change in Character of Work

If an ordered change in the plans or specifications materially changes the character of the work of a contract item from that on which the Contractor based the bid price, and if the change increases or decreases the actual unit cost of the changed item as compared to the actual or estimated actual unit cost of performing the work of that item in accordance with the plans and specifications originally applicable thereto, in the absence of an executed contract change order specifying the compensation payable, an adjustment in compensation therefore will be made in accordance with the following.

The basis of the adjustment in compensation will be the difference between the actual unit cost to perform the work of that item or portion thereof involved in the change as originally planned and the actual unit cost of performing the work of the item or portion thereof involved in the change, as changed. Actual unit costs will be determined by the Engineer in the same manner as if the work were to be paid for on a force account basis as provided in Section 3.4; or the adjustment will be as agreed to by the Contractor and the Engineer. The adjustment will apply only to the portion of the work of the item actually changed in character. At the option of the Engineer, the work of the item or portion of item which is changed in character will be paid for by force account as provided in Section 3.4.

If the compensation for an item of work is adjusted under this Section, the costs recognized in determining that adjustment shall be excluded from consideration in making an adjustment for that item of work under the provisions in Section 3.3.

Failure of the Engineer to recognize a change in character of the work at the time the approved contract change order is issued shall in nowise be construed as relieving the Contractor of the duty and responsibility of filing a written protest within the limit as provided in Doc. 00700.

3.4 Change in Contract Price

A General

The Contract Price constitutes the total compensation payable to Contractor for performing the Work. All duties, responsibilities. and obligations assigned to or undertaken by Contractor to perform the Work shall be at Contractor's expense without change in the Contract Price.

The Contract Price may only be changed by a change order. Any request for an increase in the Contract Price shall be based on written notice delivered by Contractor to City promptly, but in no event later than 10 days after the date of the occurrence of the event giving rise to the request and stating the general nature of the request. Notice of the amount of the request with supporting data shall be delivered within 45 days after the date of the occurrence, unless City allows an additional period of

time to ascertain more accurate data in support of the request, and shall be accompanied by Contractor's written statement that the amount requested covers all amounts (direct, indirect, and consequential) to which Contractor is entitled as a result of the occurrence of the event. No request for an adjustment in the Contract Price will be valid if not submitted in accordance with this Section.

The value of any Work covered by a change order or of any request for an increase or decrease in the Contract Price shall be determined in one of the following ways:

- Where the Work involved is covered by unit prices contained in the Contract documents, by application of unit prices to the quantities of the items involved; or
- By mutual acceptance of a lump sum, which may include an allowance for overhead and profit not necessarily in accordance with Section 3.4, provided Contractor submits documentation supporting the direct, indirect, overhead and profit components that compromise the lump sum amounts.
- On the basis of the cost of Work based on Time and Materials plus a Contractor's fee for overhead and profit, in accordance with this Section.

B Cost of Work (Based on Time and Materials)

The term "cost of Work" means the sum of all costs necessarily incurred and paid by Contractor for labor, materials, and equipment in the proper performance of Work. Except as otherwise may be agreed to in writing by City, such costs shall be in amounts no higher than those prevailing in the locality of the project.

1 Labor:

The cost of labor used in performing Work by Contractor, a Subcontractor, or other forces, will be the sum of the following:

The actual wages paid plus any employer payments to or on behalf of workers for fringe benefits, including health and welfare, pension, vacation, and similar purposes, not overlapping with the labor surcharge described below. The cost of labor may include the wages paid to foremen when it is determined by City that the services of foremen do not constitute a part of the overhead allowance.

There will be added to the actual wages as defined above, a percentage set forth in the latest "Labor Surcharge and Equipment Rental Rates" in use by the California State Department of Transportation which is in effect on the date upon which the work is accomplished. This percentage shall constitute full compensation for all payments imposed by State and Federal laws including, but not limited to, workers' compensation insurance and Social Security payments.

The amount paid for subsistence and travel required by collective bargaining agreements.

For equipment operators, payment for the actual cost of labor and subsistence or travel allowance will be made at the rates paid by Contractor to other workers operating similar equipment already on the work, or in the absence of such labor, established by collective bargaining agreements for the type of workers and location of the extra work, whether or not the operator is actually covered by such an agreement. A labor surcharge will be added to the cost of labor described herein, in accordance with the provisions of this Section, which surcharge shall constitute full compensation for payments imposed by State and Federal laws, and all other payments made to on behalf of workers other than actual wages.

2 Materials:

The cost of materials used in performing Work will be the cost to the purchaser, whether Contractor or subcontractor, from the supplier thereof, except as the following are applicable:

Trade discounts available to the purchaser shall be credited to City notwithstanding the fact that such discounts may not have been taken by Contractor.

For materials secured by other than a direct purchase and direct billing to the purchaser, the cost shall be deemed to be the price paid to the actual supplier as determined by City. Markup, except for actual costs incurred in the handling of such materials, will not be allowed.

Payment for materials from sources owned wholly or in part by the purchaser shall not exceed the price paid by the purchaser for similar materials from said sources on extra work items or the current wholesale price for such materials delivered to the Work Site, whichever price is lower.

If, in the opinion of City, the cost of material is excessive, or Contractor does not furnish satisfactory evidence of the cost of such material, then the cost shall be deemed to be the lowest current wholesale price for the quantity concerned delivered to the work Site, less trade discount. City reserves the right to furnish materials for the extra work and no claim shall be made by Contractor for costs and profit on such materials.

3 Equipment:

Contractor will be paid for the use of equipment at the rental rate listed for such equipment specified in the current edition of the Department of Transportation publication entitled, "Labor Surcharge and Equipment Rental Rates," which is in effect on the date upon which the work is accomplished. Such rental rates will be used to compute payments for equipment whether the equipment is under Contractor's control through direct ownership, leasing, renting, or another method of acquisition. The rental rate to be applied for use of each item of equipment shall be the rate resulting in the least total cost to City for the total period of use. If it is deemed necessary by Contractor to use equipment not listed in the foregoing publication, an equitable rental rate for the equipment will be established by City. Contractor may furnish cost data which might assist City in the establishment of the rental rate.

The rental rates paid, as above provided, shall include the cost of fuel, oil, lubrication supplies, small tools, necessary attachments, repairs and maintenance of all kinds, depreciation, storage, insurance, and all incidentals. Operators of equipment will be separately paid for as provided in this Section 3.4, "Labor".

All equipment shall be in good working condition and suitable for the purpose for which the equipment is to be used.

Before construction equipment is used on the extra work, Contractor shall plainly stencil or stamp an identifying number thereon at a conspicuous location, and shall furnish to City, in duplicate, a description of the equipment and its identifying number.

Unless otherwise specified, manufacturer's ratings and manufacturer-approved modifications shall be used to classify equipment for the determination of applicable rental rates. Equipment which has no direct power unit shall be powered by a unit of at least the minimum rating recommended by the manufacturer.

Individual pieces of equipment or tools having a replacement value of $500 or less, whether or not consumed by use, shall be considered to be small tools and no payment will be made therefore.

4 Owner-Operated Equipment:

When owner-operated equipment is used to perform Work and is to be paid for as extra work, Contractor will be paid for the equipment and operator as follows:

Payment for the equipment will be made in accordance with the provisions of Section 3.4, "Equipment."

Payment for the cost of labor and subsistence or travel allowance will be made at the rates paid by Contractor to other workers operating similar equipment already on the project, or, in the absence of such other workers, at the rates for such labor established by collective bargaining agreement for type

of worker and location of the work, whether or not the owner-operator is actually covered by such an agreement. A labor surcharge will be added to the cost of labor described herein, in accordance with the provisions in Section 3.4, "Labor."

To the direct cost of equipment rental and labor, computed as provided herein, will be added the markup for equipment rental and labor as provided in Section 3.4, "Contractor's Fee."

5 Equipment Time:

The rental time to be paid for equipment on the Work shall be the time the equipment is in productive operation on the Work being performed and shall include the time required to move the equipment to the new location and return it to the original location or to another location requiring no more time than that required to return it to its original location; except that moving time will not be paid if the equipment is used on other than the extra work. Loading and transporting costs will be allowed, in lieu of moving time, when the equipment is moved by means other than its own power. No payment will be made for loading and transporting costs when the equipment is used at the Site of the extra work on other than the extra work. The following shall be used in computing the rental time of equipment on the work:

A. When hourly rates are listed, any part of an hour less than 30 minutes of operation shall be considered to be ½ -hour of operation, and any part of an hour in excess of 30 minutes will be considered 1-hour of operation.

B. When daily rates are listed, operation for any part of a day less than 4 hours shall be considered to be half-day of operation.

C. Rental time will not be allowed while equipment is inoperative due to breakdowns or Contractor caused delays.

6 Cost of Work Documentation:

Contractor shall furnish City Daily Extra Work Reports on a daily basis covering the direct costs of labor and materials and charges for equipment whether furnished by Contractor, subcontractor, or other forces. City will provide the Daily Extra Work Report forms to Contractor. Contractor or an authorized agent shall sign each Daily Extra Work Report. The Daily Extra Work Report shall provide names and classifications of workers and hours worked; size, type, and identification number of equipment; and the hours operated. Copies of certified payrolls and statement of fringe benefit shall substantiate labor charges. Valid copies of vendor's invoices shall substantiate material charges.

City will make any necessary adjustments. When these reports are agreed upon and signed by both parties, they shall become the basis of payment for the Work performed, but shall not preclude subsequent adjustment based on a later audit.

Contractor shall inform City when extra work will begin so that City inspector can concur with the Daily Extra Work Reports. Failure to conform to these requirements may impact Contractor's ability to receive proper compensation.

7 Detours:

Contractor shall construct and remove detours and detour bridges for the use of public traffic as provided in the Special Provisions, or as directed by City. Payment for this work will be made as set forth in the Special Provisions or at the Contract Prices for the items of work involved if the work being performed is covered by contract items of work and no other method of payment therefore is provided in the Special Provisions, otherwise the work will be paid for as extra work as provided herein. The costs of repairing damaged detours caused by public traffic will be paid for as extra work as provided herein. When public traffic is routed through the work, provision for a passageway through construction operations will not be considered as detour construction or detour maintenance and this work shall conform to and be paid as basic scope of work, unless otherwise specified in the Special Provisions. Detours used exclusively by Contractor for hauling materials and equipment shall be constructed and maintained by Contractor at Contractor's expense. The failure or refusal of Contractor to construct and maintain detours at the proper time shall be sufficient cause for closing

down the work until the detours are in satisfactory condition for use by public traffic. Where Contractor is hauling is causing such damage to the detour that its maintenance in a condition satisfactory for public traffic is made difficult and unusually expensive, City shall have authority to regulate Contractor's hauling over the detour.

8 Special Services

Special services are defined as that work characterized by extraordinary complexity, sophistication, or innovations, or a combination of the foregoing attributes which are unique to the construction industry. The following may be considered by City in making estimates for payment for special services:

A. When City and Contractor, by agreement, determine that a special service is required which cannot be performed by the forces of Contractor or those of any of its subcontractors, the special service may be performed by an entity especially skilled in the work to be performed. After validation of invoices and determination of market values by City, invoices for special services based upon the current fair market value thereof may be accepted without complete itemization of labor, material, and equipment rental costs.

B. When Contractor is required to perform work necessitating special fabrication or machining process in a fabrication or a machine shop facility away from the job-Site, the charges for that portion of the work performed at the off Site facility may, by agreement, be accepted as a special service and accordingly, the invoices for the work may be accepted without detailed itemization.

C. All invoices for special services will be adjusted by deducting all trade discounts offered or available, whether the discounts were taken or not. In lieu of the allowances for overhead and profit on labor, materials, and equipment specified in Section 3.4 "Contractor's Fee", herein, a single allowance of ten (10) percent will be added to invoices for special services.

9 Contractor's Fee

A. Work ordered on the basis of time and materials will be paid for at the actual and necessary cost as determined by City, plus allowances for overhead and profit which allowances shall constitute the "Contractor's Fee". For extra work involving a combination of increases and decreases in the work, the actual necessary cost will be the arithmetic sum of the additive and deductive costs. The allowance for overhead and profit shall include compensation for superintendence, bond and insurance premiums, taxes, all field and home office expenses, and all other items of expense or cost not included in the cost of labor, materials, or equipment provided for under Sections 3.4, "Cost of Work", herein. The allowance for overhead and profit will be made in accordance with the following schedule:

Actual and Necessary Cost	**Overhead and Profit Allowance**
Labor	33 percent
Materials	15 percent
Equipment	15 percent

B. Labor, materials, and equipment may be furnished by Contractor or by the subcontractor on behalf of Contractor: When all or any part of the extra work is performed by a subcontractor, the allowance specified in "Contractor's Fee" shall only be applied to the labor, materials, and equipment costs of the subcontractors to which Contractor may add 5 percent of the subcontractor's total cost for the extra work. Regardless of the number of hierarchical tiers of subcontractors, the 5 percent increase above the subcontractor's total cost, which includes the allowances for overhead and profit specified herein, may be applied one time only for each separate work transaction.

10 Compensation for Time Extensions

Adjustments in compensation for time extension will be allowed only for causes identified in Section 3.5, Changes in Contract Time. No adjustments in compensation will be allowed when City-caused

delays to a controlling item of work and Contractor-caused delays to a controlling item of work occur concurrently, or for causes identified in Section 3.5 Changes in Contract Time.

Compensation for idle time of equipment will be determined in accordance with the provisions in Section 3.4, Owner –Operated Equipment.

11 Force-Account Work

If it is impracticable because of nature of Work, or for any other reason, to fix an increase or decrease in price definitely in advance, the Contractor may be directed to proceed at a not-to-exceed (NTE) maximum price which shall not under any circumstances be exceeded. Subject to such limitation, such extra Work shall be paid for at actual necessary cost for Force-Account Work or at the negotiated cost, as determined by City. The cost for Force-Account Work shall be determined pursuant this Section.

Force-Account Work shall be used when it is not possible or practical to price out the changed Work prior to the start of that Work. In these cases, Force-Account Work will be utilized during the pricing and negotiation phase of the change. Once negotiations have been concluded and a bilateral agreement has been reached, the tracking of the Work under Force-Account is no longer necessary. Force-Account Work shall also be used when negotiations between City and Contractor have broken apart and a bilateral agreement on the value of the changed Work cannot be reached. City may approve other uses of Force-Account Work.

Whenever any Force-Account Work is in progress, definite price for which has not been agreed on in advance, Contractor shall report to City each Business Day in writing in detail amount and cost of labor and material used, and any other expense incurred in Force-Account Work on preceding Day, by using the Cost Proposal form attached hereto. No claim for compensation for Force-Account Work will be allowed unless report shall have been made.

Whenever Force-Account Work is in progress, definite price for which has not been agreed on in advance, Contractor shall report to City when 75 percent of the NTE amount has been expended.

Force-Account Work shall be paid as extra Work under this Section. Methods of determining payment for Work and materials provided in this Section shall not apply to performance of Work or furnishings of material that, in judgment of City, may properly be classified under items for which prices are otherwise established in Contract Documents.

12 Overhead Defined

The following constitutes charges that are deemed included in overhead for all Contract Modifications, including Force-Account Work or CCD Work, whether incurred by Contractor, Subcontractors, or suppliers, and Contractor shall not invoice or receive payment for these costs separately:

A. Drawings: field drawings, Shop Drawings, etc., including submissions of drawings

B. Routine field inspection of Work proposed

C. General Superintendence

D. General administration and preparation of cost proposals, schedule analysis, change orders and other supporting documentation as necessary

E. Computer services

F. Reproduction services

G. Salaries of project engineer, superintendent, timekeeper, storekeeper and secretaries

H. Janitorial services

I. Temporary on-Site facilities:

- Offices
- Telephones
- Plumbing
- Electrical: Power, lighting
- Platforms
- Fencing, etc.

- water

J. Home office expenses

K. Insurance and Bond premiums

L. Procurement and use of vehicles and fuel used coincidentally in Work otherwise included in the Contract Documents

M. Surveying

N. Estimating

O. Protection of Work

P. Handling and disposal fees

Q. Final cleanup

R. Other incidental Work

13 Records and Certifications

Force-Account (cost reimbursement) charges shall be recorded daily and summarized in Cost Proposal form attached hereto. Contractor or authorized representative shall complete and sign form each day. Contractor shall also provide with the form: the names and classifications of workers and hours worked by each; an itemization of all materials used; a list by size type and identification number of equipment and hours operated; and an indication of all Work performed by specialists.

No payment for Force-Account Work shall be made until Contractor submits original invoices substantiating materials and specialists charges.

City shall have the right to audit all records in possession of Contractor relating to activities covered by Contractor's claims for modification of Contract, including Force-Account Work and CCD Work.

Further, City will have right to audit, inspect, or copy all records maintained in connection with this Contract, including financial records, in possession of Contractor relating to any transaction or activity occurring or arising out of, or by virtue of, the Contract. If Contractor is a joint venture, right of City shall apply collaterally to same extent to records of joint venture sponsor, and of each individual joint venture member. This right shall be specifically enforceable, and any failure of Contractor to voluntarily comply shall be deemed an irrevocable waiver and release of all claims then pending that were or could have been subject to this Document.

3.5 Change of Contract Time

A General

The Contract time may only be changed by a change order. Any request for an extension of the Contract time shall be based on written notice delivered by Contractor to City promptly, but in no event later than 10 days after the date of the occurrence of the event giving rise to the request. Such written notice shall identify the controlling item of work that justifies the time extension, and shall state in reasonable detail the general nature of the request. Notice of the full extent of the request with a supporting time impact evaluation shall be delivered within 25 days after the date of such occurrence, unless City allows an additional period of time to ascertain more accurate data in support of the request, and shall be accompanied by Contractor's written statement that the adjustment requested is the entire adjustment to which Contractor has reason to believe it is entitled as a result of the occurrence of said event. No request for an adjustment in the Contract time will be valid if not submitted in accordance with the requirements of this Section, and Contractor waives any rights not pursued under this Section.

The Contract time will only be extended when a delay occurs which impacts a controlling item of work as shown on the progress schedule required herein. Time extensions will be allowed only if the cause is beyond the control and without the fault or negligence of Contractor. Time extensions (without compensation of any sort) will also be allowed when City-caused delays to a controlling item of work and Contractor-caused delays to a controlling item of work occur concurrently or for adverse weather caused delays discussed below. Contractor will be notified if City determines that a time extension is not justified.

The Contract time will be extended in an amount equal to time lost due to delays beyond the control of Contractor if a request is made therefore as provided in this Section. An extension of Contract time will only be granted for days on which (i) Contractor is prevented from proceeding with at least 75 percent of the normal labor and equipment force actually engaged on the said work, and (ii) by excusable occurrences or conditions resulting immediately therefrom which impact a controlling item of work as determined by City. Excusable delays shall include:

- Changes.
- Failure of City to furnish access, right of way, completed facilities of related projects, Drawings, materials, equipment, or services for which City is responsible.
- Survey error by City.
- Suspension of work pursuant to Section 7, Prosecution and Progress of Work.
- Occurrences of a severe and unusual nature, including, acts of God, fires, and excusable inclement weather. An "act of God" means an earthquake, flood, cloudburst, cyclone or other cataclysmic phenomena of nature beyond the power of Contractor to foresee or to make preparation in defense against, but does not include ordinary inclement weather. Excusable inclement weather is any weather condition, the duration of which varies in excess of the average conditions expected, which is unusual for the particular time and place where the work is to be performed, or which could not have been reasonably anticipated by Contractor, as determined from National Oceanic and Atmospheric Administration ("NOAA") records for the proceeding 3-year period.
- Act of the public enemy, act of another governmental entity, public utility, epidemic, quarantine restriction, freight embargo, strike, or labor dispute. A delay to a subcontractor or supplier due to the above circumstances will be taken into consideration for extensions to the time of completion.

B Extensions of Time for Delay Due to Excusable Inclement Weather

The Contract time will be extended for as many days in excess of the average number of days of excusable inclement weather, as defined above, as Contractor is specifically required under the Special Provisions to suspend construction operations, provided that on such days Contractor is prevented by such excusable inclement weather, or conditions resulting immediately therefrom, from proceeding with at least 75 percent of the normal labor and equipment force engaged on critical items of work as shown on the schedule.

Should Contractor prepare to begin work at the regular starting time at the beginning of any regular work shift on any day on which excusable inclement weather, or the conditions resulting from the weather prevents work from beginning at the usual starting time and the crew is dismissed as a result thereof, Contractor will be entitled to a 1-day credit for advance weather whether or not conditions change thereafter during said day and the major portion of the day could be considered to be suitable for such construction operations. If Contractor starts work and then suspends work due to excusable inclement weather, then Contractor shall be entitled to a prorate credit based upon the number of work hours lost.

Contractor shall base the construction schedule upon the inclusion of the number of days of excusable inclement weather (for rain, in excess of 0.1 inch) specified by NOAA for the locality of the Project. Notwithstanding the foregoing, extension of the Contract time due to excusable inclement weather will be granted until after the said aggregate total number of days of excusable inclement weather has been reached; however, no reduction in Contract time will be made if said number of days of excusable inclement weather is not reached.

3.6 Changed Site Conditions

If any work involves digging trenches or other excavations below the surface, Contractor shall promptly and before the following conditions are disturbed, notify City in writing of any:

A. Material that Contractor believes may be a regulated material that is required to be removed to a Class I, Class II, or Class III disposal Site in accordance with provisions of existing law.

B. Subsurface or latent physical conditions at the Site differing from those indicated in this Contract.

C. Unknown physical conditions at the Site of any unusual nature, different materially from those ordinarily encountered and generally recognized as inherent in work of the character provided for in the Contract.

City will promptly investigate the condition and if it finds that the conditions do materially so differ, or do involve regulated material, and cause a decrease or increase in Contractor's cost of, or the time required for, performance of any part of the work, City will issue a change order under the procedures described in this Contract. For regulated materials, City reserves the right to use other forces for exploratory work to identify and determine the extent of such material and for removing regulated material from such areas.

In the event that a dispute arises between City and Contractor on whether the conditions materially differ or on Contractor's cost of, or time required for, performance of any part of the work, Contractor shall not be excused from any scheduled completion date provided for by this Contract but shall proceed with all work to be performed under the Contract. Contractor shall retain any and all rights provided either by this Contract or by law which pertain to the resolution of disputes and protests between the contracting parties.

3.7 Cost Reduction Incentive

The Contractor may submit to the Engineer, in writing, proposals for modifying the plans, specifications or other requirements of the contract for the sole purpose of reducing the total cost of construction. The cost reduction proposal shall not impair, in any manner, the essential functions or characteristics of the project, including but not limited to service life, economy of operation, ease of maintenance, desired appearance, or design and safety standards.

Cost reduction proposals shall contain the following information:

A. A description of both the existing contract requirements for performing the work and the proposed changes.

B. An itemization of the contract requirements that must be changed if the proposal is adopted.

C. A detailed estimate of the cost of performing the work under the existing contract and under the proposed change. The estimates of cost shall be determined in the same manner as if the work were to be paid for on a force account basis as provided in Section 3.4, "Cost of Work."

D. A statement of the time within which the Engineer must make a decision thereon.

E. The contract items of work affected by the proposed changes, including any quantity variation attributable thereto.

The provisions of this Section 3.7 shall not be construed to require the Engineer to consider any cost reduction proposal which may be submitted hereunder; proposed changes in basic design of a bridge or of a pavement type will not be considered as an acceptable cost reduction proposal; and the City will not be liable to the Contractor for failure to accept or act upon any cost reduction proposal submitted pursuant to this section nor for any delays to the work attributable to any cost reduction proposal. If a cost reduction proposal is similar to a change in the plans or specifications, under consideration by the City for the project, at the time the proposal is submitted or if the proposal is based upon or similar to Standard Specifications, standard special provisions or Standard Plans adopted by the City after the advertisement for the contract, the Engineer will not accept the proposal, and the City reserves the right to make the changes without compensation to the Contractor under the provisions of this section

The Contractor shall continue to perform the work in accordance with the requirements of the contract until an executed change order, incorporating the cost reduction proposal has been issued. If an executed change order

has not been issued by the date upon which the Contractor's cost reduction proposal specifies that a decision thereon should be made, or such other date as the Contractor may subsequently have specified in writing, the cost reduction proposal shall be deemed rejected.

The Engineer shall be the sole judge of the acceptability of a cost reduction proposal and of the estimated net savings in construction costs from the adoption of all or any part of the proposal. In determining the estimated net savings, the right is reserved to disregard the contract bid prices if in the judgment of the Engineer, those prices do not represent a fair measure of the value of work to be performed or to be deleted.

The City reserves the right where it deems such action appropriate, to require the Contractor to share in the City's costs of investigating a cost reduction proposal submitted by the Contractor as a condition of considering the proposal. Where this condition is imposed, the Contractor shall indicate acceptance thereof in writing, and that acceptance shall constitute full authority for the City to deduct amounts payable to the City from any moneys due or that may become due to the Contractor under the contract.

If the Contractor's cost reduction proposal is accepted in whole or in part the acceptance will be by a contract change order. The change order shall incorporate the changes in the plans and specifications which are necessary to permit the cost reduction proposal or that part of it as has been accepted to be put into effect, and shall include any conditions upon which the City's approval thereof is based if the approval of the City is conditional. The change order shall also set forth the estimated net savings in construction costs attributable to the cost reduction proposal effectuated by the change order, and shall further provide that the Contractor be paid 50 percent of that estimated net savings amount. The Contractor's cost of preparing the cost reduction incentive proposal and the City's costs of investigating a cost reduction incentive proposal, including any portion thereof paid by the Contractor, shall be excluded from consideration in determining the estimated net savings in construction costs.

Acceptance of the cost reduction proposal and performance of the work thereunder shall not extend the time of completion of the contract unless specifically provided for in the contract change order authorizing the use of the cost reduction proposal.

The amount specified to be paid to the Contractor in the change order which effectuates a cost reduction proposal shall constitute full compensation to the Contractor for the cost reduction proposal and the performance of the work thereof pursuant to the change order.

The City expressly reserves the right to adopt a cost reduction proposal for general use on contracts administered by the City when it determines that the proposal is suitable for application to other contracts. When an accepted cost reduction proposal is adopted for general use, only the Contractor who first submitted that proposal will be eligible for compensation pursuant to this section, and in that case, only as to those contracts awarded to that Contractor prior to submission of the accepted cost reduction proposal and as to which the cost reduction proposal is also submitted and accepted. Cost reduction proposals identical or similar to previously submitted proposals will be eligible for consideration and compensation under the provisions of this Section 3.7 if the identical or similar previously submitted proposals were not adopted for general application to other contracts administered by the City. Subject to the provisions contained herein, the City or any other public agency shall have the right to use all or any part of any submitted cost reduction proposal without obligation or compensation of any kind to the Contractor.

Contractor may submit to City, in writing, proposals for modifying the Drawings, Specifications, or other requirements of the Contract for the sole purpose of reducing the total cost of construction.

Prior to preparing a written cost reduction proposal, Contractor shall request a meeting with City to discuss the proposal in concept. Items of discussion will also include permit issues, impact on other projects, impact on the project schedule, peer reviews, overall merit of the proposal, and review times required by City and other agencies.

If a cost reduction proposal submitted by Contractor, and subsequently approved by City, provides for a reduction in contract time, 50 percent of that contract time reduction shall be credited to City by reducing the contract working days, not including plant establishment.

If a cost reduction proposal submitted by Contractor, and subsequently approved by City, provides for a reduction in traffic congestion or avoids traffic congestion during construction, 60 percent of the estimated net savings in construction costs attributable to the cost reduction proposal will be paid to Contractor. Contractor shall provide detailed comparisons of the traffic handling between the existing contract and the proposed change, and estimates of the traffic volumes and congestion.

3.8 Dust Control

During the performance of all work under this Contract, Contractor shall assume all responsibility for dust control and shall furnish all labor, equipment, and means required to carry out proper and efficient measures wherever and whenever dust control is necessary to prevent operations from producing dust damage and nuisance to persons and property. Any claims resulting therefrom shall be borne solely by Contractor.

3.9 Excavation Safety Plans

Attention is directed to Section 6705 of the Labor Code concerning trench excavation safety plans. Excavations five (5) feet or more in depth shall not begin until Contractor has submitted and City has returned indicating "In Receipt Of'" Contractor's detailed plan for worker protection from the hazards of caving ground during such excavations. The plan may be reviewed by City for completeness in accordance with federal, state and local regulations. City will not be responsible for reviewing the accuracy of assumptions, data and information used, and procedures contained in the plan or the adequacy thereof. Such plans shall show the details of the design of shoring, bracing, sloping, or other provisions to be made for worker protection during such excavation. The plan shall not allow the use of shoring, sloping, or a protective system less effective than that required by the Construction Safety Orders; and if such plan varies from the shoring system standards established by the Construction Safety Orders, the plan (including calculations) shall be prepared, signed and stamped by an engineer registered as a Civil or Structural engineer and an engineer registered as a Geotechnical Engineer, in the State of California pursuant to Sections 6700 et seq. of the Business & Professions Code.

Such plans shall be accompanied by a copy of the Permit to Excavate that has been issued by the Division of Occupational Safety and Health as required by Labor Code Section 6500 and following.

To the extent applicable, the Construction Safety Orders of the Division of Occupational Safety and Health shall apply to all excavations.

This Section shall be applicable regardless of Contract Price.

3.10 Asbestos-Related Work

Contractor's attention is directed to Section 7058.5 of the Business and Professions Code which states that from and after January 1, 1987, no Contractor shall engage in asbestos-related work, as defined, who is not certified by Contractor's State License Council to do so.

Contractor's attention is also directed to Section 6501.5, and following, of the Labor Code relative to asbestos-related work and to provisions of the General Industry Safety Orders of Title 8 of the Code of Regulations and to the BAAQMD's Rule.

When the presence of asbestos or hazardous substances are not shown on the plans or indicated in the specifications and Contractor encounters materials which Contractor reasonably believes to be asbestos or a hazardous substance as defined in Section 25914.1 of the Health and Safety Code, and the asbestos or hazardous substance has not been rendered harmless, Contractor may continue work in unaffected areas reasonably believed to be safe. Contractor shall immediately cease work in the affected area and report the condition to City in writing.

In conformance with Section 25914.1 of the Health and Safety Code, removal of asbestos or hazardous substances including exploratory work to identify and determine the extent of the asbestos or hazardous substance will be performed by separate contract.

If delay of work in the area delays the current controlling operation, Contractor may be entitled to a time extension (without additional compensation) as provided in Section 3.5, Change in Contract Time.

3.11 Substitutions

This paragraph describes procedures for selecting products and requesting substitutions of unlisted materials in lieu of materials named in the Specifications or approved for use in Addenda that were not already the subject of a Document 00660 (Substitution Request Form) submittal as provided in Document 00200 (Instructions to Bidders).

Contractor's Options:

For products specified only by reference standard Contractor may select any product meeting that standard.

For products specified by naming one or more products or manufacturers, Contractor may select products of any named manufacturer meeting the Specifications.

If product becomes unavailable due to no fault of Contractor, submit Request for Substitution (RFS), including all information contained in this Document and a fully executed Document 00660 (Request for Substitution), but using the term "Contractor" each place the term "Bidder" appears in that form.

Substitutions:

Except as provided in Document 00200 (Instructions to Bidders) with respect to "or equal" items, City will consider Contractor's substitution requests only when product becomes unavailable due to no fault of Contractor. Requests for review of proposed substitute items will not be accepted from anyone other than Contractor. The RFS shall state the extent, if any, to which the evaluation and acceptance of the proposed substitute will prejudice Contractor's achievement of Substantial Completion on time, and whether or not acceptance of the substitute for use in the Work will require a change in any of the Contract Documents (or in the provisions of any other direct contract with City for work on the Project).

Submit separate RFS (and FOUR copies) for each product and support each request with:

A. Product identification.
B. Manufacturer's literature.
C. Samples, as applicable.
D. Name and address of similar projects on which product has been used, and dates of installation.
E. Name, address, and telephone number of manufacturer's representative or sales engineer.
F. For construction methods: Detailed description of proposed method; drawings illustrating methods.

Where required, itemize a comparison of the proposed substitution with product specified and list significant variations including, but not limited to dimensions, weights, service requirements, and functional differences. If variation from product specified is not pointed out in submittal, variation will be rejected even though submittal was favorably reviewed. Identify all variations of the proposed substitute from that specified in the RFS and indicate available maintenance, repair, and replacement service.

State whether the substitute will require a change in any of the Contract Documents (or provisions of any other direct contract with City for work on the Project) to adapt the design of the proposed substitute, and whether or not incorporation or use of the substitute in connection with Work is subject to payment of any license fee or royalty. Submit data relating to changes in construction schedule.

Include accurate cost data comparing proposed substitution with product and amount of net change in Contract Sum including, but not limited to, an itemized estimate of all costs or credits that will result directly or indirectly from acceptance of such substitute, including costs of redesign and claims of other contractors affected by the resulting change, all of which will be considered by City in evaluating the proposed substitute. City may require Contractor to furnish additional data about the proposed substitute.

City will not consider substitutions for acceptance (or, in City's sole discretion, City may make Contractor solely responsible for all resulting costs, expenses and other consequences) when a substitution:

A. Results in delay meeting construction Milestones or completion dates.
B. Is indicated or implied on submittals without formal request from Contractor.
C. Is requested directly by Subcontractor or supplier.

D. Acceptance will require substantial revision of Contract Documents.
E. Disrupts Contractor's job rhythm or ability to perform efficiently.

Substitute products shall not be ordered without written acceptance of City.

City will determine acceptability of proposed substitutions and reserve right to reject proposals due to insufficient information.

Accepted substitutions will be evidenced by a Change Order. All Contract Documents requirements apply to Work involving substitutions.

Contractor's RFS constitutes a representation and warranty that Contractor:

A. Has investigated proposed product and determined that it meets or exceeds, in all respects, specified product.

B. Will provide the same warranty for substitution as for specified product.

C. Will coordinate installation and make other changes that may be required for Work to be complete in all respects.

D. Waives claims for additional costs which may subsequently become apparent.

E. Will compensate City for additional redesign costs associated with substitution.

F. Will be responsible for Construction Schedule slippage due to substitution.

G. Will be responsible for Construction Schedule delay due to late ordering of available specified products caused by requests for substitution that are subsequently rejected by City.

H. Will compensate City for all costs; including extra costs of performing Work under Contract Documents, extra cost to other contractors, and any claims brought against City, caused by late requests for substitutions or late ordering of products.

City will review Contractor's RFS with reasonable promptness and notify Contractor in writing of decision to accept or reject requested substitution

Specified products, materials, or systems for Project may include engineering or on-file standards required by the regulatory agency. Contractor's substitution of products, materials or systems may require additional engineering, testing, reviews, approvals, assurances, or other information for compliance with regulatory agency requirements or both. Provide all agency approvals or other additional information required and pay additional costs for required City services made necessary by the substitution at no increase in Contract Sum or Contract Time, and as a part of substitution proposal

3.12 Hazardous Materials / Waste

Comply with Sections 5163 through 5167 of the *General Industry Safety Orders (California Code of Regulations, Title 8)* to protect the Site from being contaminated by the accidental release of any hazardous materials and/or waste.

If Contractor encounters subsurface contamination, the following provisions and precautionary measures shall be implemented during construction:

Contractor's personnel shall be alert for and immediately report to City any detectable chemical odors, unusual debris, or discolored soil.

Should the discovery of contaminants cause delay to Contractor's operations, extension of Contract Time will be granted by City in accordance with Document 00700 (General Conditions). Contractor will not be entitled to damages or additional payment due to such delay.

If hazardous materials are encountered, they shall be handled in accordance with applicable local, state, and federal regulations which may include: (1) CCR Title 8, Division 4, Chapter 4, Section 5192 (Hazardous Waste Operations and Emergency Response); (2) CCR, Title 22, Division 4.5, Chapters 10 through 13 and 18

(Environmental Health Standards for Management of Hazardous Waste); and (3) CCR Title 23, Division 3, Chapter 15 (Discharges of Waste to Land).

Disposal requirements: Soils containing hazardous materials shall be disposed by Contractor at permitted treatment, recycling, or disposal facilities in accordance with CCR Title 23, Division 3, Chapter 15 (Discharges of Waste to Land). Determine to which permitted treatment, recycling, or disposal facilities the soil will be delivered.

Fees: Pay for any fees associated with the treatment, recycling, or disposal of these soils. Any additional soil sampling and chemical analyses required for acceptance of the soil at facilities other than those described above shall be the responsibility of Contractor.

Transport: Transport the soils to the selected facilities under approved manifests and submit copies of these manifests and the facility weight tickets to City.

Dewatering: Construct, operate and maintain as required to complete the Work all necessary cofferdams, channels, pipes, flumes, drains, sumps, well points and protective works; and furnish, install, operate and maintain all necessary pumping and other equipment for dewatering the areas of Work suspected of containing hazardous materials; and control all surface flow and groundwater as may be encountered while performing the Work. Remove all water that may accumulate in the excavation while the Work progresses so that all Work can be performed in dry conditions. All contaminated water shall be removed from the excavation before it is backfilled. The excavation shall be kept free from water until backfilling has progressed to a height above the water source. Storage tank: Provide a minimum 2,500-gallon double-walled water storage tank on Site for the duration of the Work. If more storage capacity is needed, provide additional storage tanks on Site.

Water sampling and chemical analysis: Water samples shall be collected from the holding tanks and submitted to a State-Certified chemical analysis laboratory. Chemical analyses required for the samples shall at a minimum include: TPHg following EPA Test Methods 5030/8015 (modified); benzene, toluene, ethylbenzene, and total xylenes (BTEX) following EPA Test Method 8020; and chlorinated solvents following EPA Test Method 8010. Perform additional chemical analyses that may be required for disposal or recycling of the water. Laboratory chemical analysis reports associated with the water samples shall be provided to City.

Removal of dewatering equipment: After having served their purpose, all protective works, including the temporary water storage tank(s) and dewatering pumps, shall be decontaminated and removed from the Site. Contractor is responsible for permanent disposal of all equipment that cannot be decontaminated or recycled in accordance with all applicable laws and regulations.

3.13 Inert Solids and Plant Materials Recycling

All broken concrete and A.C. shall be disposed of at a recycling facility. All excess earth, rock and debris shall be disposed of at the City Corporation Yard at 10555 Mary Avenue, Cupertino, CA.

3.14 Storm Water Pollution Control

In compliance with the State and Federal regulations regarding storm water management during construction, no waste materials or pollutants will be allowed to enter the storm drainage system. In addition to reducing downstream erosion and sedimentation, keeping pollutants and other debris out of storm drains reduces the direct discharge of materials and wastes to local creeks and San Francisco Bay.

The Contractor shall contain and remove any waste generated by the Contractor's construction operation using the appropriate Best Management Practices (BMPs) and shall properly dispose of the waste or pollutants off-site. If solid or liquid waste materials or pollutants originating from the Contractor's operation enter the storm drain system, the Contractor will be required to thoroughly clean up the affected catch basins, storm sewer and storm manholes to the satisfaction of the Engineer. If the Contractor fails to meet the requirements of this section, the City will issue a stop-work notice and take necessary action to require the Contractor to set up the preventive measures or clean up the storm drainage system as the case may be. All costs related to the stop-work action and corrective work shall be solely borne by the Contractor.

The following requirements shall be implemented to prevent the pollution of storm water runoff from construction projects.

General Requirements
Water pollution control work shall conform to the provisions in this Document, the National Pollutant Discharge Elimination System (NPDES) General Permit for Storm Water Discharges Associated with Construction Activity No. CAS000002 (NPDES Construction General Permit) and these provisions. For additional information regarding the requirements of the NPDES Construction General Permit, refer to the State Water Resources Control Board web site at *http://www.swrcb.ca.gov/stormwtr/construction.html*.

The Contractor shall be responsible for the costs and liabilities imposed by law as a result of the Contractor's failure or negligence in complying with the provisions set forth in this section and in the "Erosion and Storm Water Quality Control" section of the technical specifications for this project. For the purposes of this section, costs and liabilities include, but are not limited to, fines, penalties and damages whether assessed against the City or the Contractor, including those levied under the Federal Clean Water Act and the State Porter Cologne Water Quality Act.

In addition to the remedies authorized by law, partial payments due the Contractor under the contract may be retained by the City until financial and legal disposition has been made of the costs and liabilities.

The retention of money due the Contractor shall be subject to the following:

A. The Engineer will give the Contractor thirty (30) days notice of the City's intention to retain funds from partial payments that may become due to the Contractor prior to acceptance of the contract. Retention of funds from payments made after acceptance of the contract may be made without prior notice to the Contractor.

B. No retention of additional amounts out of partial payments will be made if the amount to be retained does not exceed the amount being withheld from partial payments pursuant to Section 9-1.06, "Partial Payments," of the Standard Provisions.

C. If the City has retained funds and it is subsequently determined that the City is not subject to the costs and liabilities in connection with the matter for which the retention was made, the City shall be liable for interest on the amount retained at the legal rate of interest for the period of the retention.

Conformance with the provisions of this section and the "Erosion and Storm Water Quality Control" section of the technical specifications for this project shall not relieve the Contractor from the Contractor's responsibilities, as provided in Section 7, "Legal Relations and Responsibilities," of the Standard Specifications.

Storm Water Pollution Prevention Plan Preparation
The Contractor shall incorporate the following Best Management Practices (BMPs), as applicable, into the site-specific Storm Water Pollution Prevention Plan (SWPPP) required for this project.

The following requirements shall be met on all projects within the City of Cupertino.

Non Hazardous Material/Waste Management

A. CONTRACTOR shall propose designated areas of the project site, for approval by the CITY ENGINEER, suitable for material delivery, storage, and waste collection that, to the maximum extent practicable, are near construction entrances and away from catch basins, gutters, drainage courses, and creeks.

B. CONTRACTOR shall store granular material at least ten feet away from catch basin and curb returns.

C. CONTRACTOR shall not allow granular material to enter the storm drains or creeks.

D. When rain is forecast within 24 hours or during wet weather, the CITY ENGINEER may require the CONTRACTOR to cover granular material with a tarpaulin and to surround the material with sand bags.

E. CONTRACTOR shall use minimal amounts of water to control dust on a daily basis or as directed by the CITY ENGINEER.

F. At the end of each working day or as directed by the CITY ENGINEER, the CONTRACTOR shall clean and sweep roadways and on-site paved areas of all materials attributed to or involved in the work.

G. CONTRACTOR shall not use water to flush down streets in place of street sweeping.

H. CONTRACTOR shall recycle aggregate base material, asphalt concrete, and Portland cement concrete as described in Section C, Special Provisions, section ***Inert Solids Recycling,*** of these Specifications.

I. In addition, to the maximum extent practicable, the CONTRACTOR shall reuse or recycle any useful construction materials generated during the project.

J. At the end of each working day, the CONTRACTOR shall collect all scrap, debris, and waste material, and dispose of such materials properly.

K. CONTRACTOR shall inspect dumpsters for leaks and contact trash hauling contractors to replace or repair dumpsters that leak.

L. CONTRACTOR shall not discharge water on-site from cleaning dumpsters.

M. CONTRACTOR shall arrange for regular waste collection before dumpsters overflow.

Hazardous Material/Waste Management

A. The CONTRACTOR shall label and store all hazardous materials, such as pesticides, paints, thinners, solvents, and fuels; and all hazardous wastes, such as waste oil and antifreeze; in accordance with the City of Cupertino Hazardous Materials Storage Ordinance and all applicable State and Federal regulations.

B. CONTRACTOR shall store all hazardous materials and all hazardous wastes in accordance with secondary containment regulations, and it is recommended that these materials and wastes be covered, as needed, to avoid potential management of collected rain water as a hazardous waste.

C. CONTRACTOR shall keep an accurate, up-to-date inventory, including Materials Safety Data Sheets (MSDSs), of hazardous materials and hazardous wastes stored on-site, to assist emergency response personnel in the event of a hazardous materials incident.

D. When rain is forecast within 24 hours or during wet weather, the CITY ENGINEER may prevent the CONTRACTOR from applying chemicals in outside areas.

E. CONTRACTOR shall not over-apply pesticides or fertilizers and shall follow materials manufacturer's instructions regarding uses, protective equipment, ventilation, flammability, and mixing of chemicals. Over-application of a pesticide constitutes a "label violation" subject to an enforcement action by the Santa Clara County Agriculture Department.

F. The CONTRACTOR shall arrange for regular hazardous waste collection to comply with time limits on storage of hazardous wastes.

G. The CONTRACTOR shall dispose of hazardous waste only at authorized and permitted treatment, storage and disposal facilities, and use only licensed hazardous waste haulers to remove the waste off-site, unless quantities to be transported are below applicable threshold limits for transportation specified in Sate and Federal regulations.

H. If the CONTRACTOR'S business office is located in Santa Clara County then the CONTRACTOR may dispose of this waste through the Countywide Household Hazardous Waste Program. Information on this program may be requested by calling (408) 299-7300.

Spill Prevention and Control

A. The CONTRACTOR shall keep a stockpile of spill cleanup materials, such as rags or absorbents, readily accessible on-site.

B. The CONTRACTOR shall immediately contain and prevent leaks and spills from entering storm drains, and properly clean up and dispose of the waste and cleanup materials. If the waste is hazardous, the CONTRACTOR shall handle the waste as described in section above.

C. The CONTRACTOR shall not wash any spilled material into streets, gutters, storm drains, or creeks and shall not bury spilled hazardous materials.

D. The CONTRACTOR shall report any hazardous materials spill by calling 911.

Vehicle/Equipment Cleaning

A. The CONTRACTOR shall not perform vehicle or equipment cleaning on-site or in the street using soaps, solvents, degreasers, steam cleaning equipment, or equivalent methods.

B. The CONTRACTOR shall perform vehicle or equipment cleaning, with water only, in a designated, bermed area that will not allow rinse water to run off-site or into streets, gutters, storm drains, or creeks.

Vehicle/Equipment Maintenance and Fueling

A. CONTRACTOR shall perform maintenance and fueling of vehicles or equipment in a designated, bermed area or over a drip pan that will not allow run-on of storm water or runoff of spills.

B. CONTRACTOR shall use secondary containment, such as a drip pan, to catch leaks or spills any time that vehicle or equipment fluids are dispensed, changed, or poured.

C. CONTRACTOR shall keep a stockpile of spill cleanup materials, such as rags or absorbents, readily accessible on-site.

D. CONTRACTOR shall clean up leaks and spills of vehicle or equipment fluids immediately and dispose of the waste and cleanup materials as hazardous waste, as described above.

E. CONTRACTOR shall not wash any spilled material into streets, gutters, storm drains, or creeks and shall not bury spilled hazardous materials.

F. CONTRACTOR shall report any hazardous materials spill by calling 911.

G. CONTRACTOR shall inspect vehicles and equipment arriving on-site for leaking fluids and shall promptly repair leaking vehicles and equipment. Drip pans shall be used to catch leaks until repairs are made. Shut-off valves on equipment must be working properly.

H. CONTRACTOR shall comply with Federal, State and City requirements for aboveground storage tanks.

Contractor Training and Awareness

A. CONTRACTOR shall train all employees/subcontractors on the storm water pollution prevention requirements contained in these Specifications.

B. CONTRACTOR shall inform subcontractors of the storm water pollution prevention contract requirements and include appropriate subcontract provisions to ensure that these requirements are met.

C. CONTRACTOR shall post warning signs in areas treated with chemicals.

D. CONTRACTOR shall paint new catch basins, constructed as part of the project, with the “No Dumping” stencil available from Cupertino Public Works Department at City Hall (408) 777-3354.

Activity-Specific Requirements

The following requirements shall be met on all projects within the City of Cupertino that include the listed activities.

Dewatering Operations

A. CONTRACTOR shall route water through a control measure, such as a sediment trap, sediment basin, or Baker tank, to remove settleable solids prior to discharge to the storm drain system. Refer to ***California Storm Water Management Practice Handbook*** for these control measures.

B. Approval of the control measure shall be obtained in advance from the CITY ENGINEER.

C. Filtration of the water following the control measure may be required on a case-by-case basis.

D. If the CITY ENGINEER determines that the dewatering operation would not generate an appreciable amount of settleable solids, the control measure requirement in 1) above may be waived.

E. CONTRACTOR shall reuse water for other needs, such as dust control or irrigation, to the maximum extent practicable.

Paving Operations

A. When rain is forecast within 24 hours or during wet weather, the CITY ENGINEER may prevent the CONTRACTOR from paving.

B. The CITY ENGINEER may direct the CONTRACTOR to protect drainage courses by using control measures, such as earth dike, straw bale, and sand bag, to divert runoff or trap and filter sediment. Refer to ***California Storm Water Best Management Practice Handbook*** for these control measures.

C. The CONTRACTOR shall place drip pans or absorbent material under paving equipment when not in use.

D. The CONTRACTOR shall cover catch basins and manholes when paving or applying seal coat, tack coat, slurry seal, or fog seal.

E. If the paving operation includes an on-site mixing plant, the CONTRACTOR shall comply with Santa Clara County General Industrial Activities Storm Water Permit requirements.

F. The CONTRACTOR shall preheat, transfer or load hot bituminous material away from drainage systems or watercourses.

G. The CONTRACTOR shall not sweep or wash down excess sand (placed as part of a sand seal or to absorb excess oil) into streets, gutters, storm drains, or creeks. Instead, the CONTRACTOR shall either collect the sand and return it to the stockpile, or dispose of it in a trash container. The CONTRACTOR shall not use water to wash down fresh asphalt concrete pavement.

Saw Cutting

A. During saw cutting and grinding operations, use as little water as possible.

B. During saw cutting, the CONTRACTOR shall cover or barricade catch basins using control measures, such as filter fabric, straw bales, sand bags, and fine gravel dams, to keep slurry out of the storm drain system. When protecting a catch basin, the CONTRACTOR shall ensure that the entire opening is covered. Refer to ***California Storm Water Best Management Practice Handbook*** for these control measures.

C. The CONTRACTOR shall shovel, absorb or vacuum saw cut slurry and pick up the waste prior to moving to the next location or at the end of each working day, whichever is sooner.

D. If saw cut slurry enters catch basins, the CONTRACTOR shall remove the slurry from the storm drain system immediately.

Traffic Detector Loop Installation and Repair

A. Protect nearby storm drain inlets prior to cutting or flushing slot for traffic detector loops. Block or berm around nearby storm drain inlets using sand bags or an equivalent barrier or use absorbent materials such as pads, pillows and socks to contain slurry.

B. Clean up residues by sweeping up as much material as possible and dispose of material properly.

Concrete, Grout and Mortar Waste Management

A. The CONTRACTOR shall avoid mixing excess amounts of fresh concrete or cement mortar on-site.

B. The CONTRACTOR shall store concrete, grout and mortar away from drainage areas and ensure that these materials do not enter the storm drain system.

C. The CONTRACTOR shall not wash out concrete trucks or equipment into streets, gutters, storm drains, or creeks.

D. The CONTRACTOR shall perform washout of concrete trucks or equipment off-site or in a designated area on-site where the water will flow onto dirt or into a temporary pit in a dirt area. The CONTRACTOR shall let the water percolate into the soil and dispose of the hardened concrete in a trash container. If a suitable dirt area is not available, the CONTRACTOR shall collect the wash water and remove it off-site.

E. The CONTRACTOR shall avoid creating runoff by draining water from washing of exposed aggregate concrete to a dirt area. If a suitable dirt area is not available, then the CONTRACTOR shall filter the wash water through straw bales or equivalent material before discharging to the storm drain.

F. The CONTRACTOR shall collect and return sweepings from exposed aggregate concrete to a stockpile or dispose of the waste in a trash container.

Painting

A. CONTRACTOR shall conduct cleaning of painting equipment and tools in a designated area that will not allow run-on of storm water or runoff of spills.

B. CONTRACTOR shall not allow wash water from cleaning of painting equipment and tools into streets, gutters, storm drains or creeks.

C. CONTRACTOR shall remove as much excess paint as possible from brushes, rollers and equipment before starting cleanup.

D. To the maximum extent practicable, the CONTRACTOR shall dispose of wash water from aqueous cleaning of equipment and tools to the sanitary sewer.

E. Otherwise, the CONTRACTOR shall direct wash water onto dirt area and spade in.

F. CONTRACTOR shall remove as much excess paint as possible from brushes, rollers and equipment before starting cleanup.

G. To the maximum extent practicable, the CONTRACTOR shall filter paint thinner and solvents for reuse.

H. CONTRACTOR shall dispose of waste thinner and solvent and sludge from cleaning of equipment and tools as hazardous waste, as described above.

I. CONTRACTOR shall store paint, solvents, chemicals, and waste materials in compliance with the City of Cupertino Hazardous Materials Storage Ordinance and all applicable State and Federal regulations. The CONTRACTOR shall store these materials in a designated area that will not allow run-on of storm water or runoff of spills.

J. CONTRACTOR shall dispose of excess thinners, solvents, oil and water-based paint as hazardous waste.

K. CONTRACTOR shall dispose of dry, empty paint cans/buckets, old brushes, rollers, rags, and drop cloths in the trash.

Earthwork

CONTRACTOR shall maximize the control of erosion and sediment by using the Best Management Practices for erosion and sedimentation in the *California Storm Water Best Management Practice Handbook - Construction Activity* or *ABAG Manual of Standards for Erosion and Sediment Control Measures.*

Thermoplastic

A. The CONTRACTOR shall transfer and load hot thermoplastic away from drainage systems or watercourses.

B. The CONTRACTOR shall sweep thermoplastic grindings into plastic bags. Yellow thermoplastic grindings may require special handling as they may contain paint.

Pesticide Usage and Pest Management

A. Follow all federal, state, and local policies (including the City's Integrated Pest Management Policy), law and regulations governing the use, storage, and disposal of pesticides and training of pest control advisors and applicators.

B. Consider employing integrated pest management methods, including:
   1. No controls;
   2. Physical and/ or mechanical methods;
   3. Environmental controls (mulching, pest-resistant vegetation)
   4. Biological controls (predators, parasites, etc.);
   5. Less toxic controls (soaps and oils etc.) and;
   6. Hot water.

C. Use the least toxic pesticides that will do the job, provided there is a choice. The agency will take into consideration the LD50, overall risk to the applicator, and impact to the environment.

D. Apply pesticides at the appropriate time to maximize their effectiveness and minimize the likelihood of discharging non-degraded pesticides in stormwater runoff. Avoid application of pesticides if rain is expected.

E. Mix and apply only as much material as is necessary for treatment. Calibrate application equipment prior to and during use to ensure desired application rate.

F. Do not mix or load pesticides in application equipment adjacent to a storm drain inlet culvert or watercourse.

G. Use of Clopyralid, Diazinon, Chlorpyrifos, Chloradane, DDT, Dieldrin or other organophosphates is prohibited.

Prior to application of any pesticides, Contractor must receive approval for application from the City's licensed pest control advisor, Diane Mahan (777-3343). Contractor must provide the pest control advisor with monthly summaries of pesticide use (City to provide forms for the summary).

SWPPP Implementation

The Contractor shall be responsible throughout the duration of the project for installing, constructing, inspecting and maintaining the BMPs included in the SWPPP or an erosion control plan and any amendments thereto and for removing and disposing of temporary control measures. Unless otherwise directed by the Engineer or specified in these special provisions, the Contractor's responsibility for SWPPP or the erosion control plan implementation shall continue throughout any temporary suspension of work ordered in conformance with the provisions in Section 7 of this Document.

Throughout the rainy season, the Contractor shall demonstrate the ability and preparedness to fully deploy soil stabilization and sediment control BMPs to protect soil-disturbed areas on the project site before the onset of rain. A quantity of soil stabilization and sediment control materials shall be maintained on site equal to 125 percent of that sufficient to protect unprotected, soil-disturbed areas on the project site. A current inventory of control measure materials and a plan to use them shall be included in the SWPPP or on the erosion control plan.

Throughout the rainy season, active soil-disturbed areas of the site shall be fully protected at the end of each day with soil stabilization and sediment control BMPs unless fair weather is predicted the next day. The Contractor shall monitor the weather forecast on a daily basis. The National Weather Service forecast shall be used. If precipitation is predicted prior to the end of the following workday, construction scheduling shall be modified, as required, and functioning BMPs shall be deployed prior to the onset of rain.

BMP Maintenance

To ensure proper implementation and function of BMPs, the Contractor shall regularly inspect and maintain the construction site for the BMPs included in the SWPPP or on an erosion control plan. The Contractor shall identify corrective actions and the time needed to address any deficient BMPs or reinitiate any BMPs that have been discontinued. The Contractor shall keep written records of all BMP inspections, maintenance activities and corrective actions.

The Contractor shall inspect the construction site as follows:

A. Prior to a forecast storm;

B. After any precipitation causes runoff;

C. At 24-hour intervals during extended rain events; and

D. Routinely, at a minimum of once every week

If the Contractor or the Engineer identifies a deficiency in the deployment or functioning of an identified BMP, the deficiency shall be corrected immediately. The deficiency may be corrected at a later date and time if requested by the Contractor and approved by the Engineer in writing, but not later than the onset of the subsequent rain event. The correction of deficiencies shall be at no additional cost to the City.

SECTION 4. CONTROL OF WORK

4.1 Authority of City

City shall decide all questions which may arise as to the quality or acceptability of materials furnished and Work performed and rate of progress of the Work, all questions which may arise as to the interpretation of the Drawings and Specifications, and all questions as to the acceptable fulfillment of the Contract on the part of Contractor. City's decision shall be final. City shall have authority to enforce and make effective such decisions and orders which Contractor fails to carry out promptly.

4.2 Submittals

Submit, at Contractor's expense, in duplicate sets, the following items ("Submittals") required by the Contract :

A. Safety Plans
B. Progress Schedules
C. Quality Assurance Control Data
D. Project Record Documents

Submit these Submittals to City for review and approval in accordance with accepted Schedule of Shop Drawings and Samples Submittals. If no such schedule is agreed upon, then all Shop Drawing, Samples, and product data Submittals shall be submitted within 21 Days after receipt of Notice of Award from City.

Transmit each item with a City approved Submittal transmittal form. Identify Project, Contractor, Subcontractor, major supplier, pertinent Drawing sheet and detail number, and Specification Section number as appropriate. Where manufacturer's standard drawings or data sheets are used, they shall be marked clearly to show those portions of the data that are applicable to this Project. Inapplicable portions shall be marked out. Submittals shall be submitted based on each Specification Section. Submittals containing information about more than one Specification Document will be returned for resubmittal. Submittals shall include all information requested by each Specification Section. (No partial Submittals.) Incomplete Submittals will be returned not reviewed by City.

The data shown on the Submittals shall be complete with respect to quantities, dimensions, specified performance and design criteria, materials and similar data to show City the materials and equipment Contractor proposes to provide and to enable City to review the information for the limited purposes specified in this Document. Submittals shall be identified clearly as to material, supplier, pertinent data such as catalog numbers and the use for which it is intended and otherwise as City may require to enable City to review the Submittal. The quantity of each Submittal to be submitted will be as required by individual Specification Documents or this Document.

At the time of each submission, give City specific written notice of all variations, if any, that the submitted Submittal may have from the requirements of the Contract Documents, and the reasons therefore. This written notice shall be in a written communication attached to the Submittal transmittal form. In addition, cause a specific notation to be made on each Submittal submitted to City, for review and approval of each such variation. If City accepts deviation, City will note its acceptance on the returned Submittal transmittal form and, if necessary, issue appropriate Contract Modification.

Submittal coordination and verification is responsibility of Contractor; this responsibility shall not be delegated in whole or in part to Subcontractors or suppliers. Before submitting each Submittal, review and coordinate each Submittal with other Submittals and with the requirements of the Work and the Contract Documents, and determine and verify:

A. All field measurements, quantities, dimensions, specified performance criteria, installation requirements, materials, catalog numbers and similar information with respect thereto;

B. All materials with respect to intended use, fabrication, shipping, handling, storage, assembly and installation pertaining to the performance of the Work; and

C. All information relative to Contractor's sole responsibilities and of means, methods, techniques, sequences and procedures of construction and safety precautions and programs incident thereto.

Contractor's submission to City of a Submittal shall constitute Contractor's representation that it has satisfied its obligations under the Contract Documents, and as set forth immediately above in this paragraph, with respect to Contractor's review and approval of that Submittal.

Designation of work "by others," if shown in Submittals, shall mean that work will be responsibility of Contractor rather than Subcontractor or supplier who has prepared Submittals.

After review by City of each of Contractor's Submittals, one (1) set of material will be returned to Contractor with actions defined as follows:

A. NO EXCEPTIONS TAKEN - Accepted subject to its compatibility with future Submittals and additional partial Submittals for portions of the Work not covered in this Submittal. Does not constitute approval or deletion of specified or required items not shown on the Submittal.

B. MAKE CORRECTIONS NOTED (NO RESUBMISSIONS REQUIRED) - Same as item 1 above, except that minor corrections as noted shall be made by Contractor.

C. REVISE AS NOTED AND RESUBMIT - Rejected because of major inconsistencies or errors that shall be resolved or corrected by Contractor prior to subsequent review by City.

D. REJECTED - RESUBMIT - Submitted material does not conform to Drawings and/or Specifications in major respect, i.e.: wrong size, model, capacity, or material.

Make a complete and acceptable Submittal at least by second submission. City reserves the right to deduct monies from payments due Contractor to cover additional costs of review beyond the second submission. Illegible Submittals will be rejected and returned to Contractor for resubmission. Contractor shall be in breach of the Contract if Contractor's first resubmittal, following a Submittal which City determines falls within categories C or D above, does not fall within categories A or B above.

Favorable review will not constitute acceptance by City of any responsibility for the accuracy, coordination and completeness of the Submittals. Accuracy, coordination, and completeness of Submittals shall be sole responsibility of Contractor, including responsibility to back-check comments, corrections, and modifications from City's review before fabrication. Contractor, Subcontractors, or suppliers may prepare Submittals, but Contractor shall ascertain that Submittals meet requirements of Contract Documents, while conforming to structural space and access conditions at point of installation. City's review will be only to assess if the items covered by the Submittals will, after installation or incorporation in the Work, conform to the information given in the Contract Documents and be compatible with the design concept of the completed Project as indicated by the Contract Documents. Favorable review of Submittal, method of work, or information regarding materials and equipment Contractor proposes to furnish shall not relieve Contractor of responsibility for errors therein and shall not be regarded as assumption of risks or liability by City, or any officer or employee thereof, and Contractor shall have no claim under Contract Documents on account of failure or partial failure or inefficiency or insufficiency of any plan or method of work or material and equipment so accepted. Favorable review shall be considered to mean merely that City has no objection to Contractor using, upon Contractor's own full responsibility, plan or method of work proposed, or furnishing materials and equipment proposed.

City's review will not extend the means, methods, techniques, sequences or procedures of construction or to safety precautions or programs incident thereto. The review and approval of a separate item as such will not indicate approval of the assembly in which the item functions.

Submit complete initial Submittal for those items where required by individual Specification Sections. Complete Submittal shall contain sufficient data to demonstrate that items comply with Specifications, shall meet minimum requirements for submissions cited in Specification Sections, shall include motor data and seismic anchorage certifications, where required, and shall include necessary revisions required for equipment other than first named. If Contractor submits incomplete initial Submittal when complete Submittal is required, Submittal may be returned to Contractor without review.

Copy, conform, and distribute reviewed Submittals in sufficient numbers for Contractor's files, Subcontractors, and vendors.

After City's review of Submittal, revise as noted and resubmit as required. Identify changes made since previous Submittal.

Begin no fabrication or work that requires Submittals until return of Submittals not requiring resubmittal. Do not extrapolate from Submittals covering similar work.

Normally, Submittals will be processed and returned to Contractor within 21 Days of receipt. Submittals received after 12:00 pm will be considered as received on the following Day. For Fridays, the following day will be considered to be Monday.

Distribute copies of reviewed Submittals to concerned persons. Instruct recipients to promptly report any inability to comply with provisions.

All Submittals shall be number-identified by Contractor, prior to submission to City, in accordance with the following:

A. Sequentially number each Submittal (i.e., "1", "2", "3", etc.) as the basis for number identification of Submittals.

B. Affix the Submittal number under which each Submittal is made on every copy of each Shop Drawing, product data, sample, certification, etc.

C. Number Installation, Operation, and Maintenance Manuals with original root number of the approved Submittal for the item.

D. If the Submittal is a resubmittal (including without limitation after an initial Submittal is rejected, returned without review or marked 'Revise as Noted and Resubmit'), add the suffix designation "A" (i.e., a resubmittal of Submittal 1 would be numbered 1A). Subsequent re-submittals would be identified by the Submittal number and sequential letters (i.e., "B", "C", "D", etc.).

E. All Submittals shall include all information requested by each Specification Section. No partial Submittals will be accepted unless previously authorized by City. In the event a partial Submittal is authorized, each subsequent different Submittal (as opposed to resubmittal) is given a new number.

F. Deliver Submittals to City at least 30 Days before dates reviewed Submittals will be needed.

G. Initial Submittal of Installation, Operation, and Maintenance Manuals shall be **45** Days after the date Submittals that pertain to the applicable portion of the Installation, Operation, and Maintenance Manual is satisfactorily reviewed.

The following table lists the number of initial Submittals required from Contractor for each type of submission, to whom Contractor shall distribute the information, and City's distribution of reviewed submissions. If Contractor needs more copies of reviewed Submittals returned to it, then either submit additional copies or make copies from the returned transparency Submittal. Submittals requiring resubmission will require the same quantity and distribution as an initial Submittal.

SUBMITTAL	Contractor Initial Submittal	City Submittal Return
	# of Copies/ Prints/ Samples	# of Copies/ Prints/ Samples
Shop Drawings	6	1
Materials Safety Data Sheets	3	1
Other Documents	6	1

Submittal transmittal form, in duplicate, shall contain the following:

A. Date, revision date, and Submittal log number.
B. Project name and City's Project number.
C. Contractor's name, address, and job number.
D. Specification Section number clearly identified.
E. The quantity of Shop Drawings, Product Data, or Samples submitted.
F. Notification of deviations from Contract Documents.
G. Materials Safety Data Sheet (MSDS) for each item complying with OSHA's Hazard Communication Standard 29 CFR 1910.1200.
H. Other pertinent data.

Submittal shall contain the following:

A. Date and revision dates.
B. Revisions, if any, identified.
C. Project Name and Project number.
D. The names of:
E. Contractor, Subcontractor, Supplier, Manufacturer, and separate detailer, when pertinent.
F. Identification of product material by location within the Project.
G. Relation to adjacent structure or materials.
H. Field dimensions, clearly identified as such.
I. Specification Section number and applicable detail reference number on the Drawings.
J. Applicable reference standards.
K. A blank space, on each Drawing or data sheet, 5" x 4" for the City's stamp.
L. Identification of deviations from Contract Documents.
M. Contractor's stamp, initialed or signed, with language certifying the review of Submittals, verification of field measurements, construction criteria and technical standards in compliance with Contract Documents.

Resubmission requirements:

A. Revise initial Shop Drawings as required and resubmit as specified for initial Submittals.
B. Indicate on Shop Drawings any changes that have been made other than those requested by City.
C. Submit new Product Data and Samples as required for initial Submittals.
D. Revise initial Installation, Operation, and Maintenance Manual(s) as required and resubmit as specified for initial Submittals.

Number of resubmissions:

One (1) reexamination of Contractor's Submittals that have been returned for correction or replacement will be included in City's budget. Any additional reexamination of Contractor's Submittals will be considered additional scope services to be paid by Contractor through City. Contractor shall pay City (or City may deduct from any progress or final payment), for engineering personnel, on an hourly basis at 2.5 times direct payroll expenses, and for consultant personnel time at 1.25 times the amount billed City.

Schedule of Shop Drawing and Sample Submittals

A. Submit preliminary Schedule of Shop Drawing and Sample Submittals as required by Document 00700 (General Conditions). Submit two copies of final and accepted Schedule of Shop Drawings and Sample Submittals as required in this Document.

A. Schedule of Shop Drawing and Sample Submittals will be used by City to schedule its activities relating to review of Submittals. Schedule of Submittals shall indicate a spreading out of Submittals and early Submittals of long-lead-time items and of items that require extensive review.

B. Schedule of Shop Drawing and Sample Submittals will be reviewed by City and shall be revised and resubmitted until accepted by City.

D. Unless otherwise specified, make Submittals in groups containing all associated items to assure that information is available for checking each item when it is received. Identify on the Submittal which Submittals should be reviewed together.

Safety Program

Submit three (3) copies of Safety Program specific to these Contract Documents to City within 15 days after the Notice to Proceed is issued**.**

Progress Schedule

A. Submit three (3) print copies of schedule at each of the following times:

1. Initial Progress Schedule at the Preconstruction Conference.
2. Original Schedule within 20 Days of the Notice to Proceed date.
3. Adjustments to the Schedule as required.
4. Schedule updates monthly, seven (7) Days prior to monthly progress meeting.

B. Submit four (4) copies of the reports listed in this document with:

1. Initial Schedule
2. Original Schedule
3. Each monthly Schedule update

C. Progress Schedules and Reports shall be submitted on a CD Ram, using software described in this Document, in addition to hard copies specified in this paragraph. Electronic files shall be complete copies, including all programs and electronic coding

Quality Assurance Control Submittals

A. Test Reports:

Submit three (3) copies; One copy will be marked with City's review comments and returned to Contractor.

Indicate that material or product conforms to or exceeds specified requirements.

Reports may be from recent or previous tests on material or product, but shall be acceptable to City.

Comply with requirements of each individual Specification Section.

B Certificates:

Submit five (5) copies; One copy will be marked with City's review comments and returned to Contractor.

Indicate that material or product conforms to or exceeds specified requirements.

Submit supporting reference data, affidavits, and certifications as appropriate.

Certificates may be recent or from previous test results on material or product, but shall be acceptable to City.

C. Material Safety Data Sheets:

In addition to Material Safety Data Sheets (MSDS) otherwise required by the Contract Documents, submit five (5) copies for any paints, solvents, thinners, varnish, lacquer, glues and adhesives, mastics, or other materials needed for the Project as required by the individual Specification Sections or as otherwise specified in the Contract Documents.

MSDS required for a Submittal shall be submitted with product data in order for the Submittal to be reviewed.

D. Installation, Operations and Maintenance Manuals

E. Project Record Documents

Submit one copy of each of the Project Record Documents listed in these Documents.

F. Delay of Submittals

Delay of Submittals by Contractor is considered avoidable delay. Liquidated damages incurred because of late Submittals will be assessed to Contractor.

G. Optional Review Meeting

At the Contractor's request, in order to facilitate the timeliness of the review process, the City may schedule a meeting to review the materials submitted. If this option is exercised, the following requirements apply:

Request a meeting date with the City at least ten (10) Business Days in advance.

Provide the complete package of Submittal information at least five (5) Business Days in advance of the meeting.

The meeting shall take place at City's office. City will provide the authorized staff to review and respond on the Submittal information during the meeting.

Make available for this meeting the job superintendent and/or foreman, Contractor's safety officer, and someone knowledgeable of all the items submitted and authorized to make substitutions or changes.

4.3 Conformity with Contract Documents and Allowable Deviations

Work and materials shall conform to the lines, grades, typical cross sections, dimensions and materials requirements, including tolerances, shown on the plans or indicated in the specifications. Although measurements, sampling, and testing may be considered evidence as to conformity, City shall be the sole judge as to whether the work or materials deviate from the plans and specifications, and City's decision as to any allowable deviations therefrom shall be final.

4.4 Order of Work

When required by the Contract Documents, Contractor shall follow the sequence of operations as set forth therein. Full compensation for conforming to those requirements will be considered as included in the prices paid for the various contract items of work and no additional compensation will be allowed therefore.

4.5 Drawings and Data to be Furnished by City

City may issue supplemental Drawings for the construction work under the Contract. These Drawings will show additional details as required for construction purposes. Installation instructions for City-furnished materials will be furnished if required.

4.6 Superintendence

Contractor shall designate, in writing before starting Work, an authorized representative who shall have complete authority to represent and act for Contractor. Said authorized representative of Contractor shall normally be present at the Site of the Work at all times while Work is actually in progress on the Contract. During any period when Work is suspended, arrangements acceptable to City shall be made for any emergency work which may be required.

Whenever Contractor or an authorized representative is not present on any part of the Work where it may be desired to give direction, orders will be given by City, which shall be received and obeyed by the superintendent who may have charge of the particular work in reference to which the orders are given. Any order given by City, not otherwise required by the Specifications to be in writing, will, on request of Contractor, be given or confirmed by City in writing.

Contractor shall designate, in writing, the names and telephone numbers of at least three representatives who could be contacted at any time in the event that an emergency occurs.

See Document 00520 Liquidated Damages due to change in Key Personnel on the project.

4.7 Character of Workers

Any subcontractor, or person employed by Contractor or subcontractor, who fails or refuses to carry out the directions of City, or appears to City to be incompetent or to act in a disorderly or improper manner, shall be removed from the Work immediately on the written request of City, and such person shall not again be employed on the Work.

4.8 Layout of Work and Surveys

There are no construction drawings for this project. Limits of removal will be marked out by City. Contractor is to match existing grade and when applicable, insure positive drainage.

City shall provide basic horizontal and vertical control points to be used as datums for the Work. All additional survey, layout, and measurement work shall be performed by Contractor as a part of the Work.

Contractor shall provide at its cost an experienced instrument person, competent assistants, and such instruments, tools, stakes and other materials required to complete the survey, layout, and measurement work. In addition, Contractor shall furnish at its cost competent persons and such tools, stakes, and other materials as City (and/or any Engineer) may require in establishing or designating control points, or in checking survey, layout, and measurement work performed by Contractor.

Contractor shall keep City informed, a reasonable time in advance, of the times and places at which it wishes to do Work, so that any checking deemed necessary by City may be done with minimum inconvenience to City and minimum delay to Contractor.

Contractor shall remove and reconstruct Work which is improperly located.

4.9 Warranty and Inspection

General Representations and Warranties: Contractor represents and warrants that it is and will be at all times fully qualified and capable of performing every Phase of the Work and to complete Work in accordance with the terms of Contract Documents. Contractor warrants that all construction services shall be performed in accordance with generally accepted professional standards of good and sound construction practices and all requirements of Contract Documents. Contractor warrants that Work, including but not limited to each item of materials and equipment incorporated therein, shall be new, of suitable grade of its respective kind for its intended use, and free from defects in design, engineering, materials, construction and workmanship. Contractor warrants that Work shall conform in all respects with all applicable requirements of federal, state and local laws, applicable construction codes and standards, licenses, and permits, Drawings and Specifications and all descriptions set forth therein, and all other requirements of Contract Documents. Contractor shall not be responsible, however, for the negligence of others in the specification of specific equipment, materials, design parameters and means or methods of construction where that is specifically shown and expressly required by Contract Documents.

Extended Guarantees: Any guarantee exceeding one year provided by the supplier or manufacturer of any equipment or materials used in the Project shall be extended for such term. Contractor expressly agrees to act as co-guarantor of such equipment and materials and shall supply City with all warranty and guarantee documents relative to equipment and materials incorporated in the Project and guaranteed by their suppliers or manufacturers.

Inspection. City shall at all times have access to the Work during its construction, and shall be furnished with every reasonable facility for ascertaining that the materials and the quality of performance are in accordance with the requirements and intentions of the Drawings and Specifications. All Work done and all materials furnished shall be subject to City's inspection and approval.

The day-to-day inspection performed by the various inspectors employed by City shall not constitute approval or ratification of Work improperly done by Contractor. City is the only person authorized to recommend acceptance or rejection of Work and materials.

The presence or absence of an inspector during performance of the Work shall not relieve Contractor of any obligation to fulfill the Contract. It shall be the duty of Contractor to see that all provisions are complied with in detail, irrespective of the inspection given the Work during its progress by City or representatives of City. Any plan or method suggested to Contractor by City or an inspector, but not specified or required, if adopted or followed in whole or in part, shall be used at the risk and responsibility of Contractor; and City and City will assume no responsibility therefore.

Should it be considered necessary or advisable by City at any time before Acceptance of the entire Work to make an examination of Work already completed by removing or tearing out same, Contractor shall, on request, promptly furnish all necessary facilities, labor, and material. If such Work is found to be defective or nonconforming in any material respect, due to the fault of Contractor or subcontractors, Contractor shall pay all the expenses of such examination and of satisfactory reconstruction. If, however, such Work is found to meet the requirements of the Contract, an equitable adjustment shall be made in the Contract Price to compensate Contractor for the additional services involved in such examination and reconstruction and, if completion of the Work has been delayed thereby, Contractor shall, in addition, be granted an appropriate extension of time.

Projects financed in whole or part with federal or state funds shall be subject to inspection at all times by the federal or state agency involved.

Any inspection, evaluation, or test performed by or on behalf of City relating to the Work is solely for the benefit of City, and shall not be relied upon by Contractor. Contractor shall not be relieved of its absolute obligation to perform Work in accordance with the Contract Documents, nor relieved of any guaranty, warranty, or other obligation, as a result of any inspections, evaluations, or tests performed by City, whether or not such inspections, evaluations, or tests are permitted or required under the Contract Documents. Contractor shall be solely responsible for testing and inspecting Work already performed to determine whether such Work is in proper condition to receive later Work.

A. Execute Contractor's submittals and assemble warranty documents, and installation, operations and maintenance manuals, executed or supplied by Subcontractors, suppliers, and manufacturers.

- Provide table of contents and assemble in 8½ inches by 11 inches three-ring binder with durable plastic cover, appropriately separated and organized.
- Include contact names and phone numbers for City personnel to call during warranty period.
- Assemble in Specification Section order.

B. Submit material prior to final application for payment.

- For equipment put into use with City's permission during construction, submit within 14 Days after first operation.
- For items of Work delayed materially beyond Date of Substantial Completion, provide updated submittal within 14 Days after acceptance, listing date of acceptance as start of warranty period.
- Warranties are intended to protect City against failure of Work and against deficient, defective and faulty materials and workmanship, regardless of sources.

C. Limitations: Warranties are not intended to cover failures that result from the following:

- Unusual or abnormal phenomena of the elements

- Vandalism after Substantial Completion
- Insurrection or acts of aggression including war

D. Related Damages and Losses: Remove and replace Work which is damaged as result of defective Work, or which must be removed and replaced to provide access for correction of warranted Work.

E. Warranty Reinstatement: After correction of warranted Work, reinstate warranty for corrected Work to date of original warranty expiration or to a date not less than one year after corrected Work was done, whichever is later.

F. Replacement Cost: Replace or restore failing warranted items without regard to anticipated useful service lives.

G. Warranty Forms: Submit drafts to City for approval prior to execution. Forms shall not detract from or confuse requirements or interpretations of Contract Documents.

- Warranty shall be countersigned by manufacturers.
- Where specified, warranty shall be countersigned by Subcontractors and installers.
- Rejection of Warranties: City reserves right to reject unsolicited and coincidental product warranties that detract from or confuse requirements or interpretations of Contract Documents.

H. Term of Warranties: For materials, equipment, systems, and workmanship, warranty period shall be one year minimum from date of Final Completion of entire Work except where:

- Detailed specifications for certain materials, equipment or systems require longer warranty periods.
- Materials, equipment or systems are put into beneficial use of City prior to Final Completion as agreed to in writing by City.

I. Warranty of Title: No material, supplies, or equipment for Work under Contract shall be purchased subject to any chattel mortgage, security agreement, or under a conditional sale or other agreement by which an interest therein or any part thereof is retained by seller or supplier. Contractor warrants good title to all material, supplies, and equipment installed or incorporated in Work and agrees upon completion of all Work to deliver premises, together with improvements and appurtenances constructed or placed thereon by Contractor, to City free from any claim, liens, security interest, or charges, and further agrees that neither Contractor nor any person, firm, or corporation furnishing any materials or labor for any Work covered by Contract shall have right to lien upon premises or improvement or appurtenances thereon. Nothing contained in this paragraph, however, shall defeat or impair right of persons furnishing materials or labor under bond given by Contractor for their protection or any rights under law permitting persons to look to funds due Contractor in hands of City.

4.10 Defective and Unauthorized Work

All Work which has been rejected shall be remedied promptly (no later than five days) or removed and replaced by Contractor in an acceptable manner at no additional cost to City.

Payment will not be made for any Work done beyond the lines and grades shown on the Drawings or established by City, or any extra Work done without written authority, and such Work will be -considered as unauthorized. Work so done may be ordered remedied, removed, or replaced.

If Contractor should fail to comply promptly with any order of City made under the provisions of this, City may cause rejected or unauthorized Work to be remedied, removed, or replaced, and the costs thereof to be deducted from any moneys due or to become due Contractor.

4.11 Construction Equipment and Plant

Contractor shall provide and use construction equipment and plant capable of producing the quality and quantity of Work required. Construction equipment shall be identified by readily visible numbers. If ordered,

Contractor shall remove unsatisfactory construction equipment and discontinue the operation of unsatisfactory plants.

4.12 Substantial Completion, Final Completion and Final Acceptance

A. Substantial Completion

The Work (or a specified part thereof) has progressed to the point where, in the opinion of City as evidenced by a Certificate of Substantial Completion, the Work is sufficiently complete, in accordance with Contract Documents, so that the Work (or specified part) can be utilized for the purposes for which it is intended; or if no such certificate is issued, when the Work (or specified part) is complete and ready for final acceptance as evidenced by written recommendation of City for final acceptance. The terms "Substantially Complete" and "Substantially Completed" as applied to all or part of the Work refer to Substantial Completion thereof.

1. When Contractor considers Work or designated portion of the Work as Substantially Complete, submit written notice to City, with list of items remaining to be completed or corrected.
2. Within reasonable time, City will inspect to determine status of completion.
3. Should City determine that Work is not Substantially Complete, City will promptly notify Contractor in writing, listing all defects and omissions.
4. Remedy deficiencies and send a second written notice of Substantial Completion. City will reinspect the Work. If deficiencies previously noted are not corrected on reinspection, then Contractor shall pay City's cost of the reinspection.
5. When City concurs that Work is Substantially Complete, City will issue a Certificate of Substantial Completion, accompanied by Contractor's list of items to be completed or corrected as verified by City.
6. A punch list examination will be performed upon Substantial Completion. One follow-up review of punch list items for each discipline will be provided.

B. **Final Completion**

When the Work authorized by the Contract has been completed, City will make the final inspection. If City determines that the Work has been completed, in accordance with the Contract, City will recommend that the Work be accepted. Contractor will be relieved of the responsibility imposed by Section 6.15, Contractor's Responsibility for Work, on the date of Acceptance.

Final Completion occurs when Work meets requirements for City's Final Completion. When Contractor considers Work is Finally Complete, submit written certification that:

1. Contractor has inspected Work for compliance with Contract Documents, and all requirements for Final Acceptance have been met.
2. Except for Contractor maintenance after Final Acceptance, Work has been completed in accordance with Contract Documents and deficiencies listed with Certificate of Substantial Completion have been corrected. Equipment and systems have been tested in the presence of City, and are operative.
3. Work is complete and ready for final inspection.
4. All systems having been tested and accepted as having met requirements of Contract Documents.
5. All required instructions and training sessions having been given by Contractor.
6. All closeout documents having been submitted by Contractor, reviewed by City and accepted by City.
7. All punch list work, as directed by City, having been completed by Contractor.
8. All final cleanup and completion activities having been completed by Contractor.

In addition to submittals required by Contract Documents, provide submittals required by governing authorities and submit final statement of accounting giving total adjusted Contract Sum, previous payments, and sum remaining due.

When City finds Work is acceptable and final closeout submittals are complete, City will issue final Change Order reflecting approved adjustments to Contract Sum not previously made by Change Order. Should City determine that Work is incomplete or defective:

1. City promptly will so notify Contractor, in writing, listing the incomplete or defective items.
2. Promptly remedy the deficiencies and notify the City when it is ready for reinspection.
3. When City determines that the Work is acceptable under the Contract Documents, City will request Contractor to make closeout submittals.

Final adjustments of accounts:

1. Submit a final statement of accounting to City, showing all adjustments to the Contract Sum and complete and execute Document 00650 (Contract and Release of Any and All Claims).
2. If so required, City shall prepare a final Change Order for submittal to Contractor, showing adjustments to the Contract Sum that were not previously made into a Contract Modification.

C. **Final Acceptance**

The City will record a "Notice of Completion" after the City Council accepts the project as complete. The final payment including without limitation on retentions will be made 35 days after the Notice of Completion has been recorded by the County, provide there are no outstanding punchlist items or deficiencies in the project. The final payment will be fewer sums as may be lawfully retained under any provisions of the contract documents or by law.

D. **Project Guarantee**

Requirements for Contractor's guarantee of completed Work are included in this Document. Guarantee Work done under Contract against failures, leaks, or breaks or other unsatisfactory conditions due to defective equipment, materials, or workmanship, and perform repair work or replacement required, at Contractor's sole expense, for period of one year from date of Final Acceptance.

Neither recordation of Final Acceptance nor final certificate for payment nor provision of the Contract nor partial or entire use or occupancy of premises by City shall constitute acceptance of Work not done in accordance with Contract Documents nor relieve Contractor of liability in respect to express warranties or responsibility for faulty materials or workmanship.

City may make repairs to defective Work as set forth in this Document.

If, after installation, operation, or use of materials or equipment to be provided under Contract proves to be unsatisfactory to City, City shall have right to operate and use materials or equipment until said materials and equipment can, without damage to City, be taken out of service for correction or replacement. Period of use of defective materials or equipment pending correction or replacement shall in no way decrease guarantee period required for acceptable corrected or replaced items of materials or equipment.

Nothing in this Document shall be construed to limit, relieve, or release Contractor's, Subcontractors', and equipment suppliers' liability to City for damages sustained as result of latent defects in equipment caused by negligence of suppliers' agents, employees, or Subcontractors. Stated in another manner, warranty contained in the Contract Documents shall not amount to, nor shall it be deemed to be, waiver by City of any rights or remedies (or time limits in which to enforce such rights or remedies) it may have for defective workmanship or defective materials under laws of this State pertaining to acts of negligence.

4.13 Use Prior to Final Acceptance

City may take possession of, and use, all or part of the Project prior to Final Acceptance.

SECTION 5. CONTROL OF MATERIALS

5.1 Source of Supply and Quality of Materials.

Contractor shall furnish all materials required to complete the work, except materials that are designated in the specifications to be furnished by City.

Only materials conforming to the requirements of the specifications shall be incorporated in the work.

The materials furnished and used shall be new, except as may be provided elsewhere in these specifications, on the plans or in the Special Provisions. The materials shall be manufactured, handled, and use in a workmanlike manner to ensure completed work in accordance with the plans and specifications. Materials to be used in the work will be subject to inspection and tests by City or City's designated representative. Contractor shall furnish without charge such samples as may be required.

Contractor shall furnish City a list of Contractor's sources of materials and the locations at which those materials will be available for inspection. The list shall be submitted on a City approved form and shall be furnished to City in sufficient time to permit inspection and testing of materials to be furnished from the listed sources in advance of their use. City may inspect, sample or test materials at the source of supply or other locations, but the inspection, sampling or testing will not be undertaken until City is assured by Contractor of the cooperation and assistance of both Contractor and the supplier of the material. Contractor shall assure that City or City's authorized representative has free access at all times to the material to be inspected, sampled or tested. It is understood that the inspections and tests if made at any point other than the point of incorporation in the work in no way shall be considered a s guaranty of acceptance of the material nor of continued acceptance of material presumed to be similar to that upon which inspections and tests have been made, and that inspection and testing performed by the State shall not relieve Contractor or Contractor's suppliers of responsibility for quality control.

Manufacturers' warranties, guaranties, instruction sheets and parts lists, which are furnished with certain Sections or materials incorporated in the work, shall be delivered to City before acceptance of the contract.

Reports and records of inspections made and tests performed, when available at the site of the work, may be examined by Contractor.

5.2 City-Furnished Materials.

No materials are furnished by the City for this project.

5.3 Storage of Materials

Sections or materials to be incorporated in the work shall be stored in such a manner as to ensure the preservation of their quality and fitness for the work, and to facilitate inspection.

5.4 Defective Materials

All materials which City has determined to not conform to the requirements of the plans and specifications will be rejected whether in place or not. They shall be removed immediately from the site of the work, unless otherwise permitted by City. No rejected material, the defects of which have been subsequently corrected, shall be used in the work unless approval in writing has been given by City. Upon failure of Contractor to comply promptly with any order of City made under the provisions in this Section 5, City shall have authority to cause the removal and replacement of rejected material and to deduct the cost thereof from any moneys due or to become due Contractor.

5.5 Plant Inspection

City may inspect the production of material, or the manufacture of products at the source of supply.

Plant inspection, however, will not be undertaken until City is assured of the cooperation and assistance of both Contractor and the material producer. City or City's authorized representative shall have free entry at all times

to those parts of the plant as concerns the manufacture or production of the materials. Adequate facilities shall be furnished free of charge to make the necessary inspection. City assumes no obligation to inspect materials at the source of supply.

5.6 Certificates of Compliance

A Certificate of Compliance shall be furnished prior to the use of any materials for which these specifications or the Special Provisions require that a certificate be furnished. In addition, when so authorized in these specifications or in the Special Provisions, City may permit the use of certain materials or assemblies prior to sampling and testing if accompanied by a Certificate of Compliance. The certificate shall be signed by the manufacturer of the material or the manufacturer of assembled materials and shall state that the materials involved comply in all respects with the requirements of the specifications. A Certificate of Compliance shall be furnished with each lot of material delivered to the work and the lot so certified shall be clearly identified in the certificate.

All materials used on the basis of a Certificate of Compliance may be sampled and tested at any time. The fact that material is used on the basis of a Certificate of Compliance shall not relieve Contractor of the requirements of the plans and specifications and any material not conforming to the requirements will be subject to rejection whether in place or not.

City reserves the right to refuse to permit the use of material on the basis of a Certificate of Compliance.

The form of the Certificate of Compliance and its disposition shall be as directed by City.

5.7 State Specification Numbers

The State Specification number of material furnished on the contract shall conform to the number specified in these specifications or the Special Provisions for the material involve, except that material conforming to a later specification issue will be acceptable.

5.8 Testing

Unless otherwise specified, all tests shall be performed in accordance with the methods used by the Department of Transportation and shall be made by the Engineer or the Engineer's designated representative.

The Department has developed methods for testing the quality of materials and work. These methods are identified by number and are referred to in the specifications as California Test. Copies of individual California Tests are available at the Transportation Laboratory, Sacramento, California, and will be furnished to interested persons upon request.

Whenever the specifications require compliance with specified values for the following properties, tests will be made by the California Test indicated unless otherwise specified:

Properties	California Test
Relative Compaction	216 or 231
Sand Equivalent	217
Resistance (R-value)	301
Grading (Sieve Analysis)	202
Durability Index	229

Whenever a reference is made in the specifications to a California Test by number, it shall mean the California Test in effect on the day the Notice to Contractors for the work is dated.

Whenever the specifications provide an option between 2 or more tests, the Engineer will determine the test to be used.

Whenever a reference is made in the specifications to a specification, manual or test designation either of the American Society for Testing and Materials, the American Association of State Highway and Transportation Officials, Federal Specifications or any other recognized national organization, and the number or other identification representing the year of adoption or latest revision is omitted, it shall mean the specification, manual or test designation in effect on the day the Notice to Contractors for the work is dated. Whenever the

specification, manual or test designation provides for test reports (such as certified mill test reports) from the manufacturer, copies of those reports, identified as to the lot of material, shall be furnished to the Engineer. The manufacturer's test reports shall supplement the inspection, sampling and testing provisions in Section 5, "Control of Materials," and shall not constitute a waiver of the City's right to inspect. When material which cannot be identified with specific test reports is proposed for use, the Engineer may, at the Engineer's discretion, select random samples from the lot for testing. Test specimens from the random samples, including those required for retest, shall be prepared in accordance with the referenced specification and furnished by the Contractor at the Contractor's expense. The number of the samples and test specimens shall be entirely at the discretion of the Engineer.

When requested by the Engineer, the Contractor shall furnish, without charge, samples of all materials entering into the work, and no material shall be used prior to approval by the Engineer, except as provided in Section 5.6, "Certificates of Compliance." Samples of material from local sources shall be taken by or in the presence of the Engineer; otherwise, the samples will not be considered for testing.

Whenever the provisions of this Section refer to tests or testing, it shall mean tests to assure the quality and to determine the acceptability of the materials and work.

A. City will select an independent testing and inspection agency or agencies to conduct tests and inspections as indicated on Drawings, in Specifications and as required by governing authorities having jurisdiction.
   1. Responsibility for time and costs shall be as indicated in schedule below. All time and costs for Contractor’s service related to such tests and inspections shall be included in Contract Time and Contract Sum.
   2. Notify City in writing (and, if provided, on inspection request form provided by City) and, if directed by City, testing and inspection agency, when Work is ready for specified tests and inspections. Deliver this written notification at least two (2) working days before the requested inspection date.

B. Contractor pays for all additional charges by testing and inspection agencies and governing authorities having jurisdiction due to the following: The amount deducted will be determined by City and deducted from moneys due or to become due to Contractor.
   1. Contractor’s failure to properly schedule or notify testing and inspection agency or authorities having jurisdiction.
   2. Costs for testing of materials and work found to be unacceptable, as determined by the test performed by City.
   3. Changes in sources, lots, or suppliers of products after original tests or inspections.
   4. Changes in means, methods, techniques, sequences, and procedures of construction that necessitate additional testing, inspection, and related services.
   5. Changes in mix designs for concrete and mortar after review and acceptance of submitted mix design.
   6. Contractor submitted requests to change materials or products, which are accepted, but require testing and/or reinspection beyond original design.

C. If initial tests or inspections made by the testing and inspection agency reveal that materials do not comply with Contract Documents, or if City has reasonable doubt that materials do not comply with Contract Documents, additional tests and inspections shall be made as directed.
   1. If additional tests and inspections establish that materials comply with Contract Documents, City shall pay all costs for such tests and inspections.
   2. If additional tests and inspections establish that materials do not comply with Contract Documents, all costs of such tests and inspections shall be deducted from Contract Sum.

If Work requiring inspection is covered by follow-on or follow-up Work before it is inspected, uncover Work so proper inspections can be performed. All costs of such tests and inspections shall be deducted from Contract Sum.

The Contractor shall be responsible for controlling the quality of the material entering the work and of the work performed, and shall perform testing as necessary to ensure control. The test methods used for quality control testing shall be as determined by the Contractor. The results of the testing shall be made available to the Engineer upon request. These tests are for the Contractor's use in controlling the work and will not be accepted for use as acceptance tests.

Full compensation for performing quality control tests and making the results available to the Engineer shall be considered as included in the contract prices paid for the various items of work involved and no additional compensation will be allowed therefor.

SECTION 6. LEGAL RELATIONS AND RESPONSIBILITY

6.1 Laws to be Observed

Contractor shall remain informed of and in compliance with all applicable existing and future federal, state, county, and municipal laws, codes, ordinances, rules and regulations, including but not limited to, those cited herein.

6.2 Labor Discrimination

In the performance of the Contract, Contractor shall not discriminate against an employee or applicant for employment because of race, color, religious creed, ancestry, sex, age, national origin, physical handicap, medical condition, or marital status. Section 1735 of the Labor Code and Sections 12990 et seq. of the Government Code are incorporated herein in full by this reference.

Contractor and each subcontractor shall submit monthly an employee utilization report, substantially conforming to U.S. Department of Labor Form CC-257 (Rev. 9/78 or successor).

6.3 Employment of Labor

In the employment of labor in the performance of the Contract, City desires that Contractor and all subcontractors shall, wherever possible, give first consideration to residents of the County.

6.4 Prevailing Wages

In accordance with provisions of Section 1773 of the Labor Code, the Director of the Department of Industrial Relations has ascertained the general prevailing rate of wages and employer payments for health and welfare, pension, vacation, and similar purposes available to the particular craft, classification, or type of workers employed on the work. These rates are set forth in the latest determination obtained from the Director, which is on file in the office of the Director of Public Works and incorporated herein by reference the same as though set out in full. Post copy of general prevailing rates at site.

Contractor shall forfeit as a penalty to City, $50 for each day, or portion thereof, for each worker paid less than the stipulated prevailing rates for any public work done under the Contract by Contractor or by any subcontractor in violation of the provisions of the Labor Code, particularly Sections 1770 through 1780, inclusive.

Each contractor and subcontractor shall keep an accurate payroll record showing the name, address, Social Security number, work classification, straight time and overtime hours worked each day and week, and the actual per diem wages paid to each journeyman, apprentice, worker, or other employee by him or her in connection with the public work. The payroll records shall be certified and shall be available for inspection at all reasonable hours at the principal office of Contractor in accordance with the provisions of Section 1776 of the Labor Code.

Contractor shall inform City of the location of the payroll records, including the street address, city, and county, and shall, within 5 working days, provide a notice of a change in location and address. The responsibility for compliance with payroll record requirements imposed by said Section 1776 of the Labor Code is on the prime Contractor.

A copy of all payrolls shall be submitted weekly to City. Payrolls shall contain the full name, address, and Social Security number of each employee, his or her correct classification, rate of pay, daily and weekly number

of hours worked, itemized deductions made, and actual wages paid. They shall also indicate apprentices and ratio of apprentices to journeymen. The employee's address and Social Security number need only appear on the first payroll on which his or her name appears. The payroll shall be accompanied by a "Statement of Compliance" signed by the employer or agent indicating that the payrolls are correct and complete and that the wage rates contained therein are not less than those required by the Contract. The "Statement of Compliance" shall be on forms furnished by City or on any form with identical wording. Contractor shall be responsible for the submission of copies of payrolls of all subcontractors.

If, by the 15th of the month, Contractor has not submitted satisfactory payrolls for all work performed during the monthly period ending on or before the first of that month, City will retain an amount equal to 10 percent of the estimated value of the work performed (exclusive of mobilization) during the month from the next monthly estimate, except that such retention shall not exceed $10,000 nor be less than $1,000. Retentions for failure to submit satisfactory payrolls shall be additional to all other retentions provided for in the Contract. The retention for failure to submit satisfactory payrolls for any monthly period will be released for payment when the monthly estimate for partial payments next following the date that all such payrolls for which the retention was made are submitted.

Contractor and each subcontractor shall preserve their respective payroll records for a period of 4 years from the date of fling a Notice of Completion and Acceptance under the Contract.

The work of installing, assembling, repairing or reconditioning, or other work of any nature on machinery, equipment, or tools used in or upon the work, shall be considered a part of the work to be performed under the Contract and any laborers. workers, or mechanics working on such machinery, equipment, or tools, shall be subject to all of the requirements relating to labor set forth in the Contract.

The construction, erection, and operation of material production, proportioning, or mixing plants from which material is used wholly on the Contract or on contracts under the supervision of City, shall be considered a part of the work to be performed under the Contract and any laborers, workers, or mechanics working on such plants shall be subject to all of the requirements relating to labor set forth in the Contract.

6.5 Hours of Labor and Work

Eight hours' labor constitutes a legal day's work. Contractor shall forfeit as a penalty to City, $25 for each worker employed in the execution of the Contract by Contractor or by any subcontractor for each day during which such worker is required or permitted to labor more than 8 hours in violation of Labor Code Sections 1810 to 1815, inclusive, except as provided for under Labor Code Section 1815.

Work hours are **8:00 A.M**. to **5:00 P.M**., Monday through Friday. No weekend, holiday or night work will be allowed without written approval from the City.

6.6 Apprentices

Contractor's attention is directed to the provisions in Sections 1777.5, 1777.6 and 1777.7 of the Labor Code concerning the employment of apprentices by Contractor or any subcontractor.

Section 1777.5 requires Contractor or subcontractor employing persons, as defined, in any apprenticeable occupation to apply to the joint apprenticeship committee which is nearest the Site of the public works project and which administers the apprenticeship program in that trade for a certificate of approval. The certificate will also fix the ratio of apprentices to journeymen that will be used in the performance of the Contract. The ratio of work performed by apprentices to journeymen in such cases shall not be less than 1 hour to 5 hours, except when the committee finds that any one of the following conditions is met:

A. In the event unemployment for the previous 3-month period in the project Site area exceeds an average of 15 percent, or

B. In the event the number of apprentices in training in such area exceeds a ratio of 1 to 5, or

C. If there is a showing that the apprenticeable craft or trade is replacing at least one-thirtieth of its journeymen annually through apprenticeship training, either (1) on a statewide basis, or (2) on a local basis, or

D. If assignment of an apprentice to any work performed under a public works contract would create a condition which would jeopardize his/her life or the life, safety, or property of fellow employees or the public at large, or if the specific task to which the apprentice is to be assigned is of such a nature that training cannot be provided by a journeyman.

Contractor is required to make contributions to funds established for the administration of apprenticeship programs if Contractor employs registered apprentices or journeymen in any apprenticeable trade on such contracts and if other contractors on the public works Site are making such contributions.

Contractor and any subcontractor shall comply with the requirements of Section 1777.5 and 1777.6 in the employment of apprentices.

Information relative to apprenticeship standards, wage schedules, and other requirements may be obtained from the Director of Industrial Relations, ex officio the Administrator of Apprenticeship, San Francisco, California, or from the Division of Apprenticeship Standards and its branch offices.

6.7 Permits and Licenses

Contractor shall procure all permits and licenses, pay all charges and fees, and give all notices necessary and incident to the prosecution of the work, except as provided in the Special Provisions.

6.8 Patents and Copyrights

Contractor shall assume all costs including any costs of defense arising from the use of any copyrighted composition, secret process, patented or unpatented invention, Section, equipment, device, or appliance manufactured, furnished, or used in the performance of the Contract, including their use by City, unless otherwise specifically stipulated in the Specifications.

6.9 Public Safety and Traffic Control

Contractor shall furnish, erect, and maintain such fences, barriers, lights, and signs and provide such flagging and guards as are necessary in the opinion of City or public agency having jurisdiction, to give adequate warning to the public of the construction and of any dangerous condition to be encountered as a result thereof.

Without limiting the foregoing, signs, lights, flags, and other warning and safety devices and their use shall conform to the requirements set forth in Part 6 of the California MUTCD. Signs or other protective devices furnished and erected by Contractor, at Contractor's expense, as above provided, shall not obscure the visibility of, nor conflict in intent, meaning and function of either existing signs, lights and traffic control devices or any construction area signs and traffic control devices for which furnishing of, or payment for, is provided elsewhere in the specifications. Signs furnished and erected by Contractor, at Contractor's expense, shall be approved by City as to size, wording and location.

The Contractor shall so conduct operations as to offer the least possible obstruction and inconvenience to the public and shall have under construction no greater length or amount of work than can be prosecuted properly with due regard to the rights of the public.

Unless otherwise provided in the special provisions, all public traffic shall be permitted to pass through the work with as little inconvenience and delay as possible. Where possible, public traffic shall be routed on new or existing paved surfaces.

Spillage resulting from hauling operations along or across any public traveled way shall be removed immediately by the Contractor at the Contractor's expense.

Existing traffic signals and highway lighting shall be kept in operation for the benefit of the traveling public during progress of the work, and other forces will continue routine maintenance of existing systems. Construction operations shall be conducted in such a manner as to cause as little inconvenience as possible to abutting property owners.

Convenient access to driveways, houses, and buildings along the line of the work shall be maintained and temporary approaches to crossings or intersecting highways shall be provided and kept in good condition. When the abutting property owner's access across the right of way line is to be eliminated, or to be replaced under the contract by other access facilities, the existing access shall not be closed until the replacement access facilities are usable.

The Contractor may be required to cover certain signs which regulate or direct public traffic to roadways that are not open to traffic. The Engineer will determine which signs shall be covered. Except as otherwise provided for construction area signs in Section 12, "Construction Area Traffic Control Devices," furnishing, installing and removing covers will be paid for as extra work as provided in Section 3.3.

No lane closure shall be permitted before 7:00 A.M. or after 5:00 P.M. Mondays through Fridays. Only under special conditions shall the City have the right to permit lane closure before 7:00 A.M. and after 5:00 P.M.

All costs of the above shall be included in the price bid for the various bid items and no special compensation will be allowed.

The Contractor shall maintain a minimum of two (2) travel lanes for traffic use, one in each direction at all times.

6.10 Accident Prevention

Contractor shall comply with the California Occupational Safety and Health Act (Labor Code Section 6300 et seq.) and Title 8 of the Code of Regulations, and will also take, or cause to be taken, such additional measures as may be necessary for the prevention of accidents.

Designate one of Contractor’s staff as “Site Safety Officer” whose duties shall include the responsibility for enforcing the environmental protection provisions of the Contract Documents including safety and health, the requirements of the Occupational Safety and Health Act, and other applicable federal, state and local standards. Submit for review by City Contractor’s intended traffic flow plan, security plan, program for temporary structures, housecleaning plan, demolition program, and environmental safety and health plan. After review by City, the implementation and enforcement of these plans shall become the responsibility of the Site Safety Officer. Any changes in the plans shall be requested by Contractor through the Site Safety Officer for written concurrence by City.

Prior to commencement of Work Contractor shall (1) submit proposals in writing for effectuating provisions for accident prevention, and (2) meet in conference with City to discuss and develop mutual understandings relative to administration of an overall safety program.

During the performance of Work under the Contract, Contractor shall institute controls and procedures for the control and safety of persons visiting the job-Site.

Contractor shall maintain an accurate record of, and shall report to City in writing, exposure data and all accidents resulting in death, traumatic injury, occupational disease, or damage to property, materials, supplies, or equipment incident to Work performed under the Contract.

City will notify Contractor of any noncompliance with the foregoing provisions. Contractor shall, after receipt of such notice, immediately take corrective action. If Contractor fails or refuses to comply immediately, the matter will be referred to the proper authority. No part of the time lost due to any stop order issued by proper authority shall be made the subject or claim for extension of time or for extra costs or damages by Contractor.

Compliance with the provisions of this Section by Subcontractors will be the responsibility of Contractor.

6.11 Explosives and Stream Pollution

This section not applicable to City projects.

6.12 Fire Protection Plan

Within 15 days after Notice of Proceed submit one copy of a fire protection plan that has been reviewed and approved by the Santa Clara County Fire Department. It is recommended that the plan include, but not be limited to, a discussion of the following items:

A Equipment spark arresters

B Fire-extinguishing equipment on hand

C Method of operation in case of fire

D Notification to authorities of any fire

E Access available during performance of Work

F Educating workers of fire protection plan

G Storage protection for flammable materials

H Ventilation and illumination equipment

6.13 Interference with Fire Hydrants, Highways, and Fences

Contractor shall conduct operations as not too close or obstruct any portion of any highway, road, or street, or prevent in any way free access to fire hydrants until permits have been obtained therefor from the proper authorities. If any highway required to be kept open shall be rendered unsafe by Contractor's operations, Contractor shall make such repairs or provide such temporary guards as shall be acceptable to the authorities having jurisdiction and to City. Any highway or street maintenance or repair work required by local authorities in connection with necessary operations under the Contract shall be performed by Contractor at Contractor's own cost and expense. Fences subject to interference shall be maintained as effective barriers consistent with the original intent but, upon approval of City, they may be moved or rearranged to facilitate prosecution of the Work until the Work is finished, after which they shall be restored to their original location in an equal or better condition that existed prior to rearrangement.

6.14 Preservation of Property

Contractor shall not damage existing improvements, utility facilities, and adjacent property, real and personal. The fact that any existing underground improvement or facility is not shown on the Drawings shall not relieve Contractor of responsibility to ascertain the existence of any underground improvement or facility which may be subject to damage by reason of Contractor's operations.

Any damage to improvements or property, whether above or below the ground, private or public, within or adjacent to the project limits, arising from, or in consequence of, the performance of the Contract shall be repaired at once by Contractor. If City requires such repair to be made prior to the execution or continued performance of any part of the Work included in this Contract, City will so notify Contractor who shall delay or discontinue the performance of that part of the Work until the necessary repair has been made. Such delay shall not be considered unavoidable, and no extension of time for completion of the Contract will be allowed therefor.

When ordered by City to make any such repair, Contractor shall start work thereon within four (4) hours and shall prosecute the same with diligence to completion. Upon failure of Contractor to so comply with such order, or upon Contractor's failure to make immediate emergency repairs reasonably determined by City to be necessary in the best interests of the public, City shall have authority to cause such repair to be made and to deduct the costs thereof from any money due, or which may become due, Contractor.

In an emergency affecting the safety of life or property including adjoining property, Contractor shall act to prevent, to the extent possible, such threatened loss or injury, whether or not instructed to do so by City.

6.15 Contractor's Responsibility for Work

Until Final Acceptance of the Work, Contractor shall have the charge and care of the work and of the materials to be used therein, and shall bear the risk of injury, loss, or damage to any part thereof by the action of the elements or from any other cause, whether arising from the execution or from the non-execution of the Work. The materials to be used in the Work include both those furnished by City and those furnished by Contractor,

including materials for which Contractor has received partial payment as provided in Section 8.3, Progress Payment.

6.16 Indemnification

City, and each of their officers, employees, consultants and agents, shall not be liable or accountable in any manner for:

A Loss or damage that may happen to the Work or any part thereof;

B Loss or damage to materials, equipment, tools or other things used or employed in performing the Work;

C Injury, sickness, disease, or death of any person, including, but not limited to, workers and the public; or

D Damage to property;

E Resulting from any cause whatsoever except their sole negligence, willful misconduct or active negligence, attributable to performance or character of the Work, and Contractor releases all of the foregoing persons and entities from any and all such claims.

To the furthest extent permitted by law (including without limitation California Civil Code Section 2782), Contractor shall assume defense of, and indemnify, and hold harmless City, and each of their officers, employees, consultants and agents, including, but not limited to, the Council, City and each City representative, from claims, suits, actions, losses and liability of every kind, nature and description, including but not limited to attorneys' fees and consultants' fees, directly or indirectly arising out of, connected with or resulting from performance of the Work, failure to perform the Work, or condition of the Work which is caused in whole or part by any act or omission of Contractor, Subcontractors, any one directly or indirectly employed by any of them or any one for whose acts any of them may be liable, regardless of whether it is caused in part by the negligence of City or by any person or entity required to be indemnified hereunder.

With respect to third party claims against Contractor, Contractor waives any and all rights to any type of express or implied indemnity against City, and each of their officers, employees, consultants and agents, including, but not limited to, the Council, City representative.

Approval or purchase of any insurance contracts or policies shall in no way relieve from liability nor limit the liability of Contractor, its Subcontractors of any tier, or the officers or agents of any of them.

To the furthest extent permitted by law (including, without limitation, Civil Code Section 2782), the indemnities, releases of liability and limitations of liability, and limitations of remedy expressed throughout the Contract Documents shall apply even in the event of breach of contract, negligence (active or passive), fault or strict liability of the party[s] indemnified, released, or limited in liability, and shall survive the termination, rescission, breach, or completion of the Contract Documents. If Contractor fails to perform any of these defense or indemnity obligations, City may in its discretion backcharge Contractor for its costs and damages resulting therefrom and withhold such sums from progress payments or other contract monies which may become due.

The indemnities in the Contract Documents shall not apply to any indemnified party to the extent of its sole negligence or willful misconduct; nor shall they apply to City to the extent of its active negligence.

6.17 Payment of Taxes

Except as otherwise specifically provided in the Special Provisions, the Contract Prices shall include full compensation for all current and future taxes of any type which Contractor is required to pay, whether imposed by federal, state, or local government, and no tax exemption certificate or any other document designed to exempt Contractor from payment of tax will be furnished to Contractor by City.

6.18 Cooperation with Others

City reserves the right to do other work on or near the Project. Contractor shall cooperate with others and conduct Work so as to facilitate work by City or others and prevent delay, additional expense, or hindrance thereto. Contractor shall request from, and exchange with others, Drawings, data, and information as necessary to insure proper completion of the project and work of others. Contractor shall furnish copies of correspondence and Drawings exchanged with other contractors to City.

Contractor shall conduct, adjust, correct, and coordinate Work with work of others so that the Project shall be free of defects.

6.19 Property Rights in Materials

Nothing in the Contract shall be construed as vesting in Contractor any right of property in the materials used after they have been attached or affixed to the Work or the soil, or after payment has been made for 90 percent of the value of materials delivered to the Site of the work, whether or not they have been so attached or affixed. All such materials shall become the property of City upon being so attached or affixed or upon payment of such 90 percent of the value of materials delivered by Contractor on the ground and not used.

6.20 Rights in Land and Improvements

Nothing in these Specifications shall be construed as allowing Contractor to make any arrangements with any person to permit occupancy or use of any land, structure, or building within the limits of the Contract for any purpose whatsoever, either with or without compensation, in conflict with any agreement between City and any owner, former owner, or tenant of such land, structure, or building.

6.21 Title to Materials Found on the Work

The title to all water and to the right to the use of all water, to all soil, stone, gravel, sand, minerals, and all other materials developed or obtained in the excavation or other operations by Contractor or any subcontractor, or any of their employees, and the right to use or dispose of the same, are hereby expressly reserved by City, and neither Contractor, nor any subcontractor, nor any of their employees shall have any right, title, or interest in or to any part thereof; neither shall they, nor any of them, assert or make any claim thereto. Contractor may be permitted to use in the Work, without charge, any such materials which meet the requirements of these Specifications.

6.22 Trespass

Contractor shall be responsible for all damage or injury which may be caused on any property by trespass by Contractor, any subcontractor, or their employees in the course of their employment, whether the said trespass was committed with or without the consent or knowledge of Contractor.

6.23 Subcontracting

The Contractor shall give personal attention to the fulfillment of the contract and shall keep the work under the Contractor's control.

No subcontractor will be recognized as such, and all persons engaged in the work of construction will be considered as employees of the Contractor and the Contractor will be held responsible for their work, which shall be subject to the provisions of the contract and specifications.

The Contractor shall perform, with the Contractor's own organization, contract work amounting to not less than 50 percent of the original total contract price, except that any designated "Specialty Items" may be performed by subcontract and the amount of any designated "Specialty Items" performed by subcontract may be deducted from the original total contract price before computing the amount of work required to be performed by the Contractor with the Contractor's own organization. When items of work in the Bid Form, (Document 00400) are preceded by the letters (S), those items are designated as "Specialty Items." Where an entire item is subcontracted, the value of work subcontracted will be based on the contract item bid price. When a portion of an item is subcontracted, the value of work subcontracted will be based on the estimated percentage of the contract item bid price, determined from information submitted by the Contractor, subject to approval by the Engineer.

Subcontracts shall include provisions that the contract between the City and the Contractor is part of the subcontract, and that all terms and provisions of the contract are incorporated in the subcontract. Subcontracts shall also contain certification by the subcontractor that the subcontractor is experienced in and qualified to do,

and knowledgeable about, the subcontracted work. Copies of subcontracts shall be available to the Engineer upon written request, and shall be provided to the Engineer at the time any litigation against the City concerning the project is filed.

Before work is started on a subcontract, the Contractor shall file with the Engineer a written statement showing the work to be subcontracted, the names of the subcontractors and the description of each portion of the work to be subcontracted.

Pursuant to the provisions of Section 6109 of the Public Contract Code, the Contractor shall not perform work on a public works project with a subcontractor who is ineligible to perform work on the public works project pursuant to Section 1777.1 or 1777.7 of the Labor Code.

When a portion of the work which has been subcontracted by the Contractor is not being prosecuted in a manner satisfactory to the City, the subcontractor shall be removed immediately on the requisition of the Engineer and shall not again be employed on the work.

Contractor shall comply with Subletting and Subcontracting Fair Practices Act commencing with Section 4100 of the Public Contract Code Violations shall subject Contractor to penalties described in the Act.

In accordance with Section 4107 of the Public Contract Code, City Council or its designated authorized officer is the awarding authority for the purpose of consenting to a substitute subcontractor.

6.24 Tunnel Construction Safety

Attention is directed to Labor Code Sections 7950 and following, concerning tunnel safety. Contractor shall notify the Division of Occupational Safety and Health and City before any initial construction may be started at any tunnels. A pre-job safety conference, to be arranged for by Contractor, shall be held for all underground operations. City shall be notified of the time and place of such conference. The tunnel classification prepared by the Division of Occupational Safety and Health shall be prominently posted at the Site by Contractor. City will obtain this classification prior to the request for bids, whenever possible, and make it available to Contractor.

6.25 Cultural Resources

If cultural resources are encountered during construction of the Project, Contractor shall avoid any further disturbance of the materials and immediately discontinue earthwork within 100 feet of the find. Contractor shall notify City immediately upon encountering cultural resources. Contractor shall be prepared to move on to another location or phase of work, allowing sufficient time for City to evaluate the nature and significance of the find, and implement appropriate management procedures.

In the event that prehistoric human remains are encountered, ground-disturbing activities at that location shall cease immediately. Contractor shall notify City immediately upon encountering human remains. Contractor shall be prepared to move on to another location or phase of Work to allow the City to notify the proper authorities and assess management of the situation.

Contractor is advised that if burials or archaeological artifacts are encountered, it may be necessary to suspend Work on the project in order to comply with the above requirements. Payment for a delay of more than 1 working day for each occurrence will be made in accordance with Section 3.

6.26 Sound Control

Contractor shall comply with all local sound control and noise level rules, regulations and ordinances which apply to any work performed pursuant to the contract.

Each internal combustion engine, used for any purpose on the job or related to the job, shall be equipped with a muffler of a type recommended by the manufacturer. No internal combustion engine shall be operated on the project without the muffler.

Grading, construction and demolition activities shall be allowed to exceed the noise limits of Section 10.48.040 of the Cupertino Municipal Code during the daytime hours; provided that the equipment utilized has high quality noise muffler and abatement devices installed and in good condition and the activity meets one of the following criteria:

A No individual device produces a noise level more than 87 dBA at a distance of twenty-five feet (25') (7.5 meters).

B A noise level on any nearby property does not exceed 80 dBA. It is a violation of the Cupertino Municipal Code to engage in any grading, street construction or underground utility work within seven hundred fifty feet (750') if a residential area on Saturdays, Sundays, holidays, and during the nighttime period except as provided in Section 10.48.030 of the Cupertino Municipal Code.

C Grading, construction, or demolition occurring during nighttime period shall not be allowed unless they meet the nighttime standards of Section 10.48.040 of the Cupertino Municipal Code.

6.27 Site Security

Contractor shall take and be fully responsible for all reasonably required measures to protect and maintain the security of persons, existing facilities and property at the Site, including without limitation preventing theft, loss, vandalism and improper concealment of personal property of the City and all persons lawfully present on the Site, and including times where workers are not present on the Site. Contractor's measures shall include, at a minimum, maintaining a log of all persons entering and leaving the Site and who they represent, what they are delivering and to whom.

Contractor shall repair all damage to City's property resulting from Contractor's failure to provide adequate security measures at no cost to City.

Contractor shall maintain a lock on the Construction access gate at all times.

Contractor shall supply additional security fencing, barricades, lighting, and other security measures as required to protect and control the Site.

Contractor shall provide a Safety Program in accordance with all applicable federal, state, and local regulation codes, rules, laws and ordinances.

6.28 Public Facilities

Where overhead service to a structure, known to receive service, does not exist, then underground service shall be assumed to exist.

Contractor's attention is directed to the existence of underground sewer, water, gas, power, telephone and cable and other utilities within the areas in which Work is to be performed. Contractor shall, at least 2 Business Days, or as otherwise noted, prior to commencement of excavation, notify the following owners of these Underground

Facilities:

A. Storm drainage lines:

City of Cupertino

B. Water:

San Jose Water Co., 374 West Santa Clara, San Jose, CA 95113-9971, Phone: 408-279-7900

Cal Water, 949 B Street, Los Altos, CA 94024-6005, Phone: 650-917-0920

C. Cable:

Comcast, 1900 S. Tenth St., San Jose, CA 95112, Phone: 408-918-3230

D. Electrical/Gas:

Pacific Gas & Electric, 10900 N. Blaney Ave., Cupertino, CA 95014, Phone: 408-725-2098

E. Phone:

Pacific Bell/AT&T, 3475 B N. First Street, San Jose, CA 95134, Phone: 408-493-7236

F. Sanitary:

Cupertino Sanitary, 20833 Stevens Creek Blvd., Suite 104, Cupertino, CA 95014, Phone: 408-259-7071

The Contractor shall have all of the utilities, underground mains, and services that may conflict with the project, located in the field. The Contractor shall contact Underground Service Alert (USA) two (2) working days in advance of any work, for location of the underground facilities, at 800-642-2444.

Underground vaults and lines are shown on the Drawings. Contractor shall exhibit extreme care when conducting this work and may be required to hand dig in these locations. The vaults and lines shall be protected throughout the construction period.

Attention is directed to the presence of overhead telephone, cable and power lines and a power pole in the area. The existing power pole shall be protected throughout the construction period. Protection of these power poles may require assistance from PG&E, AT&T and Comcast. Cost for assistance by PG&E, AT&T and Comcast shall be borne by Contractor.

Attention is directed to the existing utilities in the area. Contractor shall notify utility companies prior to digging in this area and shall abide by any provisions instructed by the utility company for protection of their facility including hand digging in this area. Costs for compliance with all mitigation measures shall be borne by Contractor.

6.29 Legal Actions Against the City

No representative, officer, or employee of City, no member of the governing body of the locality in which the Project is situated, no member of the locality in which City was activated, and no other public official of such locality or localities who exercises any functions or responsibilities with respect to the Project, during the tenure of the official or for one year thereafter, shall, as principal, agent, attorney or otherwise, be directly or indirectly interested, in the Contract Documents or the proceeds thereof.

6.30 Limit of Liabiltiy

CITY, AND EACH OF ITS OFFICERS, THE CITY COUNCIL, EMPLOYEES, CONSULTANTS (INCLUDING WITHOUT LIMITATION CONSULTING ENGINEER) AND AGENTS INCLUDING, BUT NOT LIMITED TO, ENGINEER EACH OTHER CITY REPRESENTATIVE SHALL HAVE NO LIABILITY TO CONTRACTOR FOR SPECIAL, CONSEQUENTIAL, OR INCIDENTAL DAMAGES, EXCEPT TO THE LIMITED EXTENT THAT THESE CONTRACT DOCUMENTS OR APPLICABLE PUBLIC CONTRACTING STATUTES MAY SPECIFY THEIR RECOVERY.

SECTION 7. PROSECUTION AND PROGRESS OF WORK

7.1 Assignment

The performance of the Contract may not be assigned except upon the written consent of the Council. Consent will not be given to any proposed assignment which would relieve the original Contractor or surety of their responsibilities under the Contract.

Contractor may assign moneys due, or to become due under the Contract, and such assignment will be recognized by City, if given proper notice thereof, to the extent permitted by law, but any assignment of moneys shall be subject to all proper setoffs in favor of City and to all deductions provided for in the Contract and particularly all money withheld, whether assigned or not, shall be subject to being used by City for the completion of the Work in the event that Contractor should be in default therein.

7.2 Notice to Proceed

The Contract Time will commence to run on the date indicated on the Notice to Proceed. Contractor shall not do any work at the site prior to the date on which the Contract Time commences to run.

7.3 Commencement of Work

Contractor shall not begin Work until receipt from City of the Notice to Proceed, and shall, upon receiving notice, begin Work within the time specified in the notice. The time specified in said notice will allow a period of at least 10 days after the date of said notice for commencement of Work. After receipt of said notice, Contractor shall diligently prosecute the Work to completion. Contractor shall provide, at least 24 hours in advance, written notice to City of Contractor's intention to start Work and specify the date on which Contractor intends to start.

No Work shall begin until the Contract, bonds and certificates of insurance required by Section 2 have been received and approved.

7.4 Work Progress Schedule

A. General

Progress Schedule shall be based on and incorporate milestone and completion dates specified in Contract Documents.

Overall time of completion and time of completion for each milestone shown on Progress Schedule shall adhere to times in Document 00520 (Contract), unless an earlier (advanced) time of completion is requested by Contractor and agreed to by City. A Change Order shall formalize any such agreement.

1. City is not required to accept an earlier (advanced) schedule, i.e., one that shows early completion date(s) for the Contract Time.

2. Contractor is not entitled to extra compensation in event agreement is reached on an earlier (advanced) schedule and Contractor completes its Work, for whatever reason, beyond completion date shown in earlier (advanced) schedule but within the Contract Time.

3. A schedule showing the Work completed in less than the Contract Time, which has been accepted by City, shall be considered to have Project Float. The Project Float is the time between the scheduled completion of the Work and Contract Substantial Completion. Project Float is a resource available to both City and Contractor.

4. Float Ownership: Neither City nor Contractor owns float. The Project owns the float. As such, liability for delay of any Substantial Completion or Final Completion date rests with the party whose actions, last in time, actually cause delay to a Substantial Completion or Final Completion date.

    a. For example, in the event of unexcused delay by Party A and Party B, and if Party A uses some, but not all of the float and Party B later uses remainder of the float as well as additional time beyond the float, Party B shall be liable for the time that represents a delay to the Substantial Completion date.

    b. Under this scenario, Party A would not be responsible for the time since it did not consume all of the float and additional float remained; therefore, the Substantial Completion Date was unaffected.

c Progress Schedule shall be the basis for evaluating job progress, payment requests, and time extension requests. Responsibility for developing Contract schedule and monitoring actual progress as compared to Progress Schedule rests with Contractor.

d Failure of Progress Schedule to include any element of the Work or any inaccuracy in Progress Schedule will not relieve Contractor from responsibility for accomplishing the Work in accordance with the Contract. City's acceptance of Schedule shall be for its use in monitoring and evaluating job progress, payment requests, and time extension requests, and shall not, in any manner, impose a duty of care upon City, or act to relieve Contractor of its responsibility for means and methods of construction.

e Transmit each item under form approved by City.

- Identify Project with the City Project number, and name of Contractor.
- Provide space for Contractor's approval stamp and City's review stamps.
- Submittals received from sources other than Contractor will be returned to Contractor without City's review.

B. Initial and Original Progress Schedule

Initial Schedule submitted for review at the Preconstruction Conference shall serve as Contractor's schedule for up to 30 Days after the Notice to Proceed.

Initial Schedule must indicate detailed plan for the Work to be completed in first 30 Days of the Contract; details of planned mobilization of plant and equipment; sequence of early operations; and procurement of materials and equipment. Show Work beyond 30 Days in summary form.

Contractor shall submit its Original Schedule for review no later than first progress payment. Original Schedule and all updates shall comply with all standards herein.

All Schedules shall be time-scaled.

All Schedules shall be cost- and resource-loaded. Accepted cost- and resource-loaded Schedule will be used as basis for monthly progress payments. Use of Initial Schedule for progress payments shall not exceed 30 Days.

Except as otherwise expressly provided in this Document, meet with City to review and discuss the each Schedule (i.e., Initial, Original and monthly updates) within seven Days after each Schedule has been submitted to City.

City's review and comment on any Schedule shall be limited to Contract conformance (with sequencing, coordination, and milestone requirements).

Contractor shall make corrections to Schedule necessary to comply with Contract requirements and shall adjust Schedule to incorporate any missing information requested by City. Resubmit Initial Schedule if requested by City.

If Contractor is of the opinion that any of the Work included on its Schedule has been impacted, submit to City a written Time Impact Evaluation (TIE) in accordance with this Section. The TIE shall be based on the most current update of the Initial Schedule.

C. Schedule Format and Level of Detail

Each Schedule (Initial, Original and updates) shall indicate all separate fabrication, procurement and field construction activities required for completion of the Work, including but not limited to the following:

1. All Contractor, Subcontractor, and assigned Contractor work shall be shown in a logical work sequence that demonstrates a coordinated plan of work for all contractors. The intent is to provide a common basis of acceptance, understanding, and communication, as well as interface with other contractors.

2. Activities related to the delivery of Contractor and City-furnished equipment to be Contractor-installed per Contract shall be shown.

3. All activities shall be identified through codes or other identification to indicate the building (i.e. buildings, Site work) and Contractor/Subcontractor responsibility to which they pertain.

4. Break up the Work schedule into activities of durations of approximately 21 Days or less each, except for non-field construction activities or as otherwise deemed acceptable by City.

5. Show the critical path in red. For each activity, show early start, late start, early finish, late finish, durations measured in Days, float, resources, predecessor and successor activities, planned workday/week for the activity, man power loading, and scheduled/actual progress payments.

Seasonal weather conditions (which do not constitute a delay as defined herein) shall be considered in the planning and scheduling of all work influenced by high or low ambient temperatures or presence of high moisture for the completion of the Work within the allotted Contract Time.

Failure by Contractor to include any element of Work required for performance of the Work on the detailed construction schedule shall not excuse Contractor from completing all Work required within the Contract Time.

A two-week “look ahead,” detailed daily bar chart schedule shall be updated and issued weekly. Utilize computer-scheduling software, such as Microsoft Project software or approved equivalent, for all scheduling including schedule updates.

D. Monthly Schedule Update Submittals

Following acceptance of Contractor’s Initial Schedule, monitor progress of Work and adjust Schedule each month to reflect actual progress and any anticipated changes to planned activities.

Each Schedule update submitted shall be complete, including all information requested for the Initial Schedule and Original Schedule submittal.

Each update shall continue to show all Work activities including those already completed. These completed activities shall accurately reflect “as built” information by indicating when activities were actually started and completed, and Contractor warrants the accuracy of as-built information as shown.

Within five Days after monthly Schedule update, submit the updated Schedule.

Within five Days of receipt of above-noted revised submittals, City will either accept or reject monthly schedule update submittal.

1. If accepted, percent complete shown in monthly update will be basis for Application for Payment by Contractor. The schedule update shall be submitted as part of Contractor's Application for Payment.

2. If rejected, update shall be corrected and resubmitted by Contractor before the Application for Payment is submitted.

Updating, changing or revising of any report, curve, schedule or narrative submitted to City by Contractor under this Contract, nor City's review or acceptance of any such report, curve, schedule or narrative shall not have the effect of amending or modifying, in any way, the Contract Substantial Completion date or milestone dates or of modifying or limiting, in any way, Contractor's obligations under this Contract.

E. Schedule Revisions

Updating the Schedule (Initial and Original) to reflect actual progress shall not be considered revisions to the Schedule. Since scheduling is a dynamic process, however, revisions to activity durations and sequences are expected on a monthly basis.

To reflect revisions to the Schedule, provide City with a written narrative with a full description and reasons for each Work activity revised. For revisions affecting the sequence of Work, provide a schedule diagram that compares the original sequence to the revised sequence of Work. Provide the written narrative and schedule diagram for revisions three Days in advance of the monthly schedule update. Clearly show and discuss any changes in the critical path.

Schedule revisions shall not be incorporated into any schedule update until City has reviewed the revisions. City may request further information and justification for schedule revisions and, within three Days, provide City with a complete written narrative response to City's request.

If City does not accept Contractor's revision, and Contractor disagrees with City's position, Contractor has seven Days from receipt of City's letter rejecting the revision, to provide a written narrative providing full justification and explanation for the revision. Contractor's failure to respond in writing within seven Days of City's written rejection of a schedule revision shall be contractually interpreted as acceptance of City's position, and Contractor waives its rights to subsequently dispute or file a claim regarding City's position. If Contractor files a timely response as provided in this paragraph, and the parties are still unable to agree, Contractor's sole right shall be to file a claim as provided in this Document.

At City's discretion, Contractor can be required to provide Subcontractor certifications of performance regarding proposed schedule revisions affecting said Subcontractors.

F. Recovery Schedule

If a Schedule update shows a substantial completion date 21 Days beyond any Contract Substantial Completion date, or individual Milestone completion dates, submit to City within seven Days the proposed revisions to recover the lost time. As part of this submittal, provide a written narrative for each revision made to recapture the lost time. If the revisions include sequence changes, provide a schedule diagram comparing the original sequence to the revised sequence of Work. If City requests, show the intended critical path; secure appropriate Subcontractor and supplier consent to the recovery Schedule; submit a narrative explaining trade flow and construction flow changes, duration changes, added/deleted activities, critical path changes and identify all near critical paths and man hour loading assumptions for major Subcontractors.

The revisions shall not be incorporated into any Schedule update until City has reviewed the revisions. If City does not accept Contractor's revisions, City and Contractor shall follow the procedures in paragraphs above.

At City's discretion, Contractor can be required to provide Subcontractor certifications for revisions affecting said Subcontractors.

G. Time Impact Evaluation (TIE) For Change Orders and Other Delays

When Contractor is directed to proceed with changed work, prepare and submit, within 14 Days from the direction to proceed, a TIE that includes both a written narrative and a schedule diagram depicting how the changed work affects other schedule activities. The schedule diagram shall show how Contractor proposes to incorporate the changed work in the schedule, and how it impacts the current Schedule update critical path or otherwise. Contractor is also responsible for requesting time extensions based on the TIE's impact on the critical path. The diagram shall be tied to the main sequence of scheduled activities to enable City to evaluate the impact of changed work to the scheduled critical path.

Comply with the requirements of this Section for all types of delays such as, but not limited to, Contractor/Subcontractor delays, adverse weather delays, strikes, procurement delays, fabrication delays, etc.

Contractor is responsible for all costs associated with the preparation of TIEs, and the process of incorporating TIEs into the current schedule update. Provide City with four copies of each TIE.

Once agreement has been reached on a TIE, the Contract Time will be adjusted accordingly. If agreement is not reached on a TIE, the Contract Time may be extended in an amount City allows, and Contractor may submit a claim for additional time claimed by Contractor as provided in this Document.

H. Time Extensions

Contractor is responsible for requesting time extensions for time impacts that, in the opinion of Contractor, impact the critical path of the current schedule update. Notice of time impacts shall be given in accordance with this Document

Where an event for which City is responsible impacts the projected Substantial Completion date, provide a written mitigation plan, including a schedule diagram, which explains how (e.g., increase crew size, overtime, etc.) the impact can be mitigated. Also include a detailed cost breakdown of the labor, equipment, and material Contractor would expend to mitigate City-caused time impact. Submit mitigation plan to City within 14 Days from the date of discovery of said impact. Contractor is responsible for the cost to prepare the mitigation plan.

Failure to request time, provide TIE, or provide the required mitigation plan will result in Contractor waiving its right to a time extension and cost to mitigate the delay.

No time will be granted under the Contract Documents for cumulative effect of changes.
City will not be obligated to consider any time extension request unless requirements of Contract Documents are complied with.

Failure of Contractor to perform in accordance with the current schedule update shall not be excused by submittal of time extension requests.

Notwithstanding any other provision of this Section, if Contractor does not submit a TIE within the required 14 Days for any issue, Contractor hereby agrees that Contractor does not require a time extension for that issue.

I. Project Status Reporting

In addition to submittal requirements for scheduling identified in this Section, provide a monthly project status report (i.e., written narrative report) to be submitted in conjunction with each Schedule as specified herein. Status reporting shall be in form specified in this paragraph below.

Prepare monthly written narrative reports of status of Project for submission to City. Written status reports shall include:

1. Status of major Project components (percent complete, amount of time ahead or behind schedule) and an explanation of how Project will be brought back on schedule if delays have occurred.

2. Progress made on critical activities indicated on each Schedule, including inspections.

3. Explanations for any lack of work on critical path activities planned to be performed during last month.

4. Explanations for any schedule changes, including changes to logic or to activity durations.

5. List of critical activities scheduled to be performed during the next month.

6. Status of major material and equipment procurement.

7. Any delays encountered during reporting period.

8. Provide printed report indicating actual versus planned resource (labor, materials and equipment) loading for each trade and each activity. This report shall be provided on weekly and monthly basis.

   a. Actual resource shall be accumulated in field by Contractor, and shall be as noted on Contractor's daily reports. These reports will be basis for information provided in monthly and weekly printed reports.
   b. Explain all variances and mitigation measures.

9. Contractor may include any other information pertinent to status of Project. Include additional status information requested by City at no additional cost.

10. Status reports, and the information contained therein, shall not be construed as claims, notice of claims, notice of delay, or requests for changes or compensation.

At the close of each workday provide City with report of Contractor and its Subcontractors' work activities for that day, including trades, equipment, work activities worked on, staff levels, and equipment deliveries.

7.5 Temporary Suspension of Work

By written order to Contractor, City may suspend the Work wholly or in part for an indefinite period, or for such period as City may deem necessary, for any of the following reasons:

- Weather conditions or other conditions which are unfavorable for the proper prosecution of the Work;
- Failure of Contractor to carry out orders given or to perform any provisions of the Contract; or
- The convenience and benefit of City**.**

Such suspension shall be effective upon receipt by Contractor of the written order suspending the Work and shall be terminated upon receipt by Contractor of the written order terminating the suspension.

If, under authority of Convenience and benefit of City, as stated above, City orders a suspension of all or a portion of the Work, which is the current controlling operation, it will be cause for a time extension if it affects the controlling item of Work.

7.6 Liquidated Damages

In case all the Work called for under the Contract in all parts and requirements is not finished or completed within the number of days as set forth in Document 00520 (Contract), it is agreed that damage will be sustained by City, and that it is and will be impracticable and extremely difficult to ascertain and determine the actual damage which City will sustain in the event of and by reason of such delay; and it is, therefore, agreed that Contractor will pay to City the sum set forth in Document 00520 (Contract) per day for each and every day's delay in finishing the Work in excess of the number of days prescribed; and Contractor agrees to pay said

liquidated damages herein provided for, and further agrees that City may deduct the amount thereof from any moneys due, or that may become due, to Contractor under the Contract.

7.7 Termination of Control

Failure to supply an adequate working force or material of proper quality, or in any other respect to prosecute the Work with the diligence and force specified by the Contract, is grounds for termination of Contractor's control over the Work and for taking over the Work by City.

7.8 Termination of Contract for Cause

Contractor shall be in default of the Contract Documents and City may terminate Contractor's right to proceed under the Contract Documents, for cause, should Contractor commit a material breach of the Contract Documents and not cure such breach within ten (10) calendar days of the date of notice from City to Contractor demanding such cure; or, if such breach is curable but not curable within such ten (10) day period, within such period of time as is reasonably necessary to accomplish such cure. (In order for Contractor to avail itself of a time period in excess of 10 calendar days, Contractor must provide City within the ten (10) day period with a written plan acceptable to City to cure said breach, and then diligently commence and continue such cure according to the written plan).

In the event of termination by City as provided above for cause, Contractor shall deliver to City possession of the Work in its then condition, including but not limited to, all designs, engineering, Project records, cost data of all types, plans and specifications and contracts with vendors and subcontractors, all other documentation associated with the Project, and all construction supplies and aids dedicated solely to performing the Work which, in the normal course of construction, would be consumed or only have salvage value at the end of the construction period. Contractor shall remain fully liable for the failure of any Work completed and materials and equipment provided through the date of such termination to comply with the provisions of the Contract Documents. The provisions of this Section shall not be interpreted to diminish any right which City may have to claim and recover damages for any breach of the Contract Documents or otherwise, but rather, Contractor shall compensate City for all loss, cost, damage, expense, and/or liability suffered by City as a result of such termination and failure to comply with the Contract Documents.

In the event a termination for cause is later determined to have been made wrongfully or without cause, then the termination shall be treated as a termination for convenience, and Contractor shall have no greater rights than it would have had following a termination for convenience. Any Contractor claim arising out of a termination for cause shall be made in accord with Section 9 herein. No other loss, cost, damage, expense or liability may be claimed, requested or recovered by Contractor.

7.9 Termination of Contract for Convenience

A. City may terminate performance of the Work under the Contract Documents in accordance with this clause in whole, or from time to time in part, whenever City shall determine that termination is in City's best interest. Termination shall be effected by City delivering to Contractor notice of termination specifying the extent to which performance of the Work under the Contract Documents is terminated and the effective date of the termination.

B. After receiving a notice of termination, and except as otherwise directed by City, Contractor shall:

1. Stop Work under the Contract Documents on date and to extent specified in notice of termination;
2. Place no further orders or subcontracts for materials, services, or facilities except as necessary to complete portion of Work under the Contract Documents which is not terminated;
3. Terminate all orders and subcontracts to extent that they relate to performance of Work terminated by the notice of termination;
4. Assign to City in manner, at times, and to extent directed by City, all right, title, and interest of Contractor under orders and subcontracts so terminated. City shall have the right, in its sole discretion, to settle or pay any or all claims arising out of termination of orders and subcontracts;
5. Settle all outstanding liabilities and all claims arising out of such termination of orders and subcontracts, with approval or ratification of City to extent City may require. City's approval or ratification shall be final for purposes of this section;

6. Transfer title to City, and deliver in the manner, at the times, and to the extent, if any, directed by City, all fabricated or un-fabricated parts, Work in process, completed Work, supplies, and all other material produced as part of, or acquired in connection with performance of, Work terminated by the notice of termination, and completed or partially completed drawings, drawings, specifications, information, and other property which, if the Project had been completed, would have been required to be furnished to City;

7. Use its best efforts to sell, in manner, at times, to extent, and at price or prices that City directs or authorizes, any property of types referred to in preceding paragraph, but Contractor shall not be required to extend credit to any purchaser, and may acquire any such property under conditions prescribed and at price or prices approved by City. Proceeds of transfer or disposition shall be applied to reduce payments to be made by City to Contractor under the Contract Documents or shall otherwise be credited to the price or cost of Work covered by Contract Documents or paid in such other manner as City may direct;

8. Complete performance of the part of the Work which was not terminated by the notice of termination; and

9. Take such action as may be necessary, or as City may direct, to protect and preserve all property related to Contract Documents which is in Contractor's possession and in which City has or may acquire interest.

C. After receipt of a notice of termination, Contractor shall submit to City its termination claim, in form and with all certifications required by Section 9. Contractor's termination claim shall be submitted promptly, but in no event later than 6 months from effective date of the termination. Contractor and City may agree upon the whole or part of the amount or amounts to be paid to Contractor because of a total or partial termination of Work under this Section. If Contractor and City fail to agree on the whole amount to be paid to Contractor because of the termination of the Work under this Section, City's total liability to Contractor by reason of the termination shall be the total (without duplication of any items) of:

1. The reasonable cost to Contractor, without profit, for all Work performed prior to the effective date of the termination, including Work done to secure the Project for termination. Reasonable cost may not exceed the applicable percentage completion values derived from the progress schedule and the schedule of values. Deductions shall be made for cost of materials to be retained by Contractor, cost of Work defectively performed, amounts realized by sale of materials, and for other appropriate credits against cost of Work. Reasonable cost will include reasonable allowance for Project overhead and general administrative overhead not to exceed a total of ten percent of direct costs of such Work. When, in City's opinion, the cost of any item of Work is excessively high due to costs incurred to remedy or replace defective or rejected Work, reasonable cost to be allowed will be the estimated reasonable cost of performing the Work in compliance with requirements of Contract Documents and excessive actual cost shall be disallowed.

2. A reasonable allowance for profit on cost of Work performed as determined in the preceding paragraph, provided that Contractor establishes to City's satisfaction that Contractor would have made a profit had the Project been completed, and provided further that the profit allowed shall not exceed 5 percent of cost.

3. Reasonable costs to Contractor of handling material returned to vendors, delivered to City or otherwise disposed of as directed by City.

4. A reasonable allowance for Contractor's internal administrative costs in preparing termination claim.

5. Except as provided in this Section, City shall not be liable for costs incurred by Contractor or Subcontractors after receipt of a notice of termination. Such non-recoverable costs include, but are not limited to, anticipated profits on Work not performed as of the date of termination, post-termination employee salaries, post-termination general administrative expenses, post-termination overhead or unabsorbed overhead, costs of preparing and submitting Contractor's Bid, attorney's fees of any type, and all costs relating to prosecution of claim or lawsuit.

6. City shall have no obligation to pay Contractor under this Section unless and until Contractor provides City with updated and acceptable as-builts and Project Record Documents for Work completed prior to termination.

D. In arriving at the amount due Contractor under this clause, there shall be deducted in whole (or in the appropriate part[s] if the termination is partial):

1. All unliquidated advances or other payments on account previously made to Contractor, including without limitation all payments applicable to the terminated portion of Contract Documents;

2. Any claim which City may have against Contractor in connection with Contract Documents; and

3. The agreed price for, or proceeds of sale of, any materials, supplies, or other things kept by Contractor or sold under provisions of this Section, and not otherwise recovered by or credited to City.

7.10 Contractor's Cost Data

Contractor shall maintain cost accounting records for the contract pertaining to, and in such a manner as to provide a clear distinction between, the following six categories of costs of work during the life of the contact:

A. Direct costs of contract item work.

B. Direct costs of changes in character in conformance with Section 3.3, Change in Work.

C. Direct costs of extra work in conformance with Section 3.3, Change in Work.

D. Direct costs of work not required by the contract and performed for others.

E. Direct costs of work performed under a notice of potential claim in conformance with the provisions in Section 9.

F. Indirect costs of overhead.

See also section 3.4, Change in Contract Price, regarding cost accounting records for daily extra work.

City shall have the right to inspect, audit, and copy Contractor's books and records related to the Project wherever located, and to inspect the Site, including Contractor's trailer, or other job Site office, and this requirement shall be contained in the subcontracts of Subcontractors working on Site. Contractor shall maintain in good order and City shall have the right to inspect and obtain copies of the following documents at all times: all Contract Documents, all planning and design documents, all Bid Documents, all design modification proposals, all value engineering or other cost reduction proposals, all revisions made to the original design, and all job progress reports and photographs, and as-built drawings maintained by Contractor.

City or any of its duly authorized representatives shall, from start of work until the expiration of 4 years after filing the Notice of Completion and Acceptance under this Contract or any subcontract under it, have access to and the right to examine any of Contractor's or subcontractor's payrolls, records of personnel, invoices of materials, records of plant and equipment costs, and any and all other directly pertinent books, documents, papers, and records of such Contractor or subcontractors, involving transactions related to said Contract or subcontracts. In the event State or Federal funds are involved in the financing of the project, the State or Federal Government shall have the same rights of inspection as City.

The cost accounting records for this Contract shall be maintained separately from other contracts during the life of this Contract, and for a period of not less than 3 years after the date of acceptance of the Work. If Contractor intends to file claims against City, Contractor shall keep all required cost accounting records until complete resolution of all claims has been reached.

7.11 Coordination with Utilities

In general, the location of existing utility facilities as shown on the Drawings is approximate. This information has been obtained from utility maps furnished by the various agencies involved, and City does not guarantee either the correctness of locations or the extent of such locations.

Service laterals, such as house sanitary, water, electrical, gas, cable TV, storm or telephone cables, or appurtenances, may not all be shown on the Drawings. City may not indicate the presence of service laterals or appurtenances whenever the presence of such utilities can be inferred from the presence of other visible facilities, such as buildings, meter boxes or junction boxes, on or adjacent to the construction Site. No changes in the Contract Price or Contract time will be made due to the presence of unidentified or incorrectly located service laterals or appurtenances. It shall be the responsibility of Contractor to ascertain the exact location of the utility facilities.

Unless otherwise indicated on the Drawings or specified in the Specifications, Contractor shall maintain in service all utilities including house services, power, lighting, and telephone conduits, and any other surface or subsurface structure or facility of any nature that may be affected by the Work; provided, however, that Contractor, for convenience, may arrange with the owner to temporarily disconnect house service lines or other facilities along the line of the work. The cost of disconnecting and restoring such utilities shall be borne by Contractor.

In the event that a main or trunk line utility facility is encountered which interferes with the Work and is neither shown on the Drawings nor specified in the Specifications, Contractor shall immediately notify City in writing. City will either have the appropriate utility company or public agency relocate the facility, or City will direct Contractor to relocate the facility in accordance with Section 3.3, Change in Work.

In the event that a main or trunk line utility facility is encountered which interferes with the Work and which Contractor believes is not shown on the Drawings or indicated in the Specifications with reasonable accuracy, Contractor shall immediately notify City in writing. Reasonable accuracy is defined as being within the tolerances noted on the Drawings. If City determines that the main or trunk line utility facility was shown on the Drawings or indicated in the Specifications with reasonable accuracy, Contractor shall be solely responsible for relocation or removal, and no additional time will be granted nor will additional compensation be made for any additional work required. If City determines that the main or trunk line utility facility was not shown on the Drawings or indicated in the Specifications with reasonable accuracy, City will either have the appropriate utility company or public agency relocate the facility, or City will direct Contractor to relocate the facility in accordance with Section 3.3, Change in Work.

When a delay in the completion of the project is caused by the failure of City or the owner of a utility facility to provide for removal or relocation of existing main or trunk line utility facilities which are not shown on the Drawings or indicated in the Specifications, or which are not shown on the Drawings or indicated in the Specifications with reasonable accuracy, the Contract time will be extended in accordance with Section 3.5, Change of Contract Time.

7.12 Temporary Facilities

A. Temporary Electricity

Contractor shall provide, maintain, and pay for electrical power at the Site for construction purposes and for Contractor's and Construction Manager's trailers. Contractor must provide all necessary wiring and appurtenances for connection to City's system.

B. Temporary Communications

Provide, maintain, and pay for all applicable communications and data services, without limitation, to Contractor's field office commencing at time of Project mobilization, including all installation and connection charges.

C. Temporary Water

1. Provide, maintain, and pay for suitable quality water service required for construction operations.

2. All water required for and in connection with the Work, including without limitation for dust control, shall be furnished by and at the expense of Contractor. Contractor will be responsible for all costs/fees associated with water usage. Contractor shall furnish necessary pipe, hose, nozzles, meter, and tools and perform all necessary labor. Unnecessary waste of water will not be permitted. Special hydrant wrenches shall be used for opening and closing fire

hydrants; in no case shall pipe wrenches be used for this purpose. Contractor to coordinate services with the appropriate Water Company.

D. Fence

1. All existing fences affected by the Work shall be maintained by Contractor until Final Completion. Fences which interfere with construction operations shall not be relocated or dismantled until City gives written permission to do so, and the period the fence may be left relocated or dismantled has been agreed upon. Where fences must be maintained across the construction easement, adequate gates shall be installed. Gates shall be kept closed and locked at all times when not in use.

2. On completion of the Work across any tract of land, Contractor shall restore all fences to their original or to a better condition and to their original locations. Contractor will be responsible for all costs associated with the relocating of the fence as required for new installation of work.

E. Temporary Sanitary Facilities

1. Provide and maintain required temporary buildings with sanitary toilets for use of all workers. At a minimum, sanitary facilities shall be located at trailer site, staging area, and adjacent to work area and as far away from adjacent residences as possible. Location must be approved by City prior to placement.

2. Sanitary facilities shall be of reasonable capacity, properly maintained throughout the construction period, and obscured from public view to the greatest practical extent. If toilets of the chemically treated type are used, at least one toilet will be furnished for each 20 persons. Contractor shall enforce the use of such sanitary facilities by all personnel at the Site.

3. Comply with all minimum requirements of the Health Department or other public agency having jurisdiction; maintain in a sanitary condition at all times.

7.13 Project Record Documents

Not required for this project.

7.14 Preconstruction Conference

City will call for and administer Preconstruction Conference at time and place to be announced (usually the week prior to start of Work at the Site).

Contractor, all major Subcontractors, and major suppliers shall attend Preconstruction Conference.

Agenda will include, but not be limited to, the following items.

- Schedules
- Personnel and vehicle permit procedures
- Use of premises
- Location of the Contractor's on-Site facilities
- Security
- Housekeeping
- Submittal and RFI procedures
- Inspection and testing procedures, on-Site and off-Site
- Utility shutdown procedures
- Control and reference point survey procedures
- Injury and Illness Prevention Program
- Contractor's Initial Schedule
- Contractor's Schedule of Values
- Contractor's Schedule of Submittals

City will distribute copies of minutes to attendees. Attendees shall have 7 Days to submit comments or additions to minutes. Minutes will constitute final memorialization of results of Preconstruction Conference.

7.15 Weekly Progress Meeting

City will schedule and administer weekly progress meetings throughout duration of Work. Progress meetings will be held weekly unless otherwise directed by City.

Meetings shall be held at Contractor's on-Site office unless otherwise directed by City.

An City representative will prepare agenda and distribute it 4 Days in advance of meeting to Contractor.

City will record. Within 3 Days after meeting, City will distribute minutes to Contractor, who will distribute to those affected by decisions made at meeting. Attendees can either submit comments or additions to minutes prior to the next progress meeting, or may attend the next progress meeting and submit comments or additions there. Minutes will constitute final memorialization of results of meeting.

Progress meetings shall be attended by Contractor's job superintendent, major Subcontractors and suppliers, City, and others as appropriate to agenda topics for each meeting.

Agenda will contain the following items, as appropriate:

- Review, revise as necessary, and approve previous meeting minutes
- Review of Work progress since last meeting
- Status of Construction Work Schedule, delivery schedules, adjustments
- Submittal, RFI, and Change Order status
- Review of the Contractor's safety program activities and results, including report on all serious injury and/or damage accidents
- Other items affecting progress of Work

7.16 Right of Way Delays

If, through the failure of the City to acquire or clear right of way, Contractor sustains loss which could not have been avoided by the judicious handling of forces, equipment and plant, there shall be paid to the Contractor that amount that the Engineer may find to be a fair and reasonable compensation for that part of the Contractor's actual loss, that, in the opinion of the Engineer, was unavoidable, determined as follows:

Compensation for idle time of equipment will be determined in the same manner as determinations are made for equipment used in the performance of extra work paid for on a force account basis, as provided in Section 3.04 of this document with the following exceptions:

- The right of way delay factor for each classification of equipment shown in the Department of Transportation publication entitled Labor Surcharge And Equipment Rental Rates, which is a part of the contract, will be applied to that equipment rental rate.
- The time for which the compensation will be paid will be the actual normal working time during which the delay condition exists, but in no case will exceed 8 hours in any one day.
- The days for which compensation will be paid will be the calendar days, excluding Saturdays, Sundays and legal holidays, during the existence of the delay, except that when rental of equipment is paid for under the provisions in Section 3.4, Change in Contract Price, no payment will be made for right of way delays in conformance with the provisions of Section 7.11, Coordination with Utilities.

Actual loss shall be understood to include no items of expense other than idle time of equipment and necessary payments for idle time of workers, cost of extra moving of equipment and cost of longer hauls. Compensation for idle time of equipment will be determined as provided in this Section and compensation for idle time of workers will be determined as provided in Section 3.4, Change in Contract Price, and no markup will be added in either case for overhead and profit.

The cost of extra moving of equipment and the cost of longer hauls will be paid for as extra work as provided in Section 3.3, Change in Work.

If performance of the Contractor's work is delayed as the result of the failure of the City to acquire or clear right of way, an extension of time determined pursuant to the provisions in Section 7.6, Liquidated Damages, will be granted.

SECTION 8. MEASUREMENT AND PAYMENT

8.1 Measurement of Quantities

All Work except Work based on time and materials will be paid for at a contract price per unit of measurement and will be measured by City in accordance with the United States Standard Measures and Metric. Unless otherwise specifically provided, City will compute quantities by a method which, in City's opinion, is best suited to obtain an accurate determination. The weights of metalwork, pipe, and other metal parts to be paid for on the basis of weight, will be determined by City. City will not provide scales for weighing material. City will determine the weight of each part or item in the most practicable manner and will use for that purpose manufacturer's weights, or in their absence, catalog weights or estimated weights, in that order; provided, that weights of nonmetallic coatings will be excluded.

8.2 Deductions from Payments

City may, at its option and at any time, retain out of any amounts due Contractor, sums sufficient to cover claims, filed pursuant to Section 3179 et seq. of the Civil Code.

8.3 Progress Payment

Unless otherwise agreed, Contractor shall submit to City, on or before the first (1st) day of each month, five (5) copies of a request for payment for the cost of the Work put in place during the period from the 1st day of the previous month to the 30th day of the previous month. Such requests for progress payments shall be based upon prices of all labor and acceptable materials incorporated in the Work up until midnight of the last day of that one month period, less the aggregate of previous payments. If Contractor is late submitting its payment request, that payment request may be processed at any time during the succeeding one month period, resulting in processing of Contractor's payment request being delayed for more than a day for day basis.

Acceptable materials shall be those materials which will become a part of the finished construction work. The basis for partial payments of lump sum or other unit Contract items will be determined by Contract between City and Contractor. City shall retain 10 percent of such estimated value of work done and 10 percent of the value of the materials so estimated to have been furnished and delivered and unused as aforesaid, and shall pay to Contractor, while carrying on the Work, the balance not retained as aforesaid, after deducting therefrom all previous payments and all sums to be kept or retained under the provisions of the Contract. However, at any time after 50 percent of the Work has been completed, if City finds that satisfactory progress is being made, City may make any of the remaining progress payments in full for actual Work completed, or may withhold any amount up to 10 percent thereof, as City may find appropriate, based on Contractor's progress. No such estimate or payment shall be required to be made when, in the judgment of City, the Work is not proceeding in accordance with the provisions of the Contract, or when, in City's judgment, the total value of the Work done since the last estimate amounts to less than $1,000. No such estimate or payment shall be considered to be an acceptance of any defective Work or improper materials. All progress estimates and payments shall be subject to correction in the final estimate.

Contractor shall, at the time any payment request is submitted, certify in writing the accuracy of the payment request and that Contractor has fulfilled all scheduling requirements of this Document 00700 including updates and revisions. The certification shall be executed by a responsible officer of Contractor.

When an item of work is designated as (F) in the Bid Form, (Document 00400), the estimated quantity for that item of work shall be the final pay quantity, unless the dimensions of any portion of that item are revised by the Engineer, or the item or any portion of the item is eliminated. If the dimensions of any portion of the item are revised, and the revisions result in an increase or decrease in the estimated quantity of that item of work, the final pay quantity for the item will be revised in the amount represented by the changes in the dimensions, except as otherwise provided for minor structures in Caltrans Standard Specifications, Section 51, "Measurement." If a final pay item is eliminated, the estimated quantity for the item will be eliminated. If a portion of a final pay item is eliminated, the final pay quantity will be revised in the amount represented by the eliminated portion of the item of work.

The estimated quantity for each item of work designated as (F) in the Bid Form, (Document 00400) shall be considered as approximate only, and no guarantee is made that the quantity which can be determined by computations, based on the details and dimensions shown on the plans, will equal the estimated quantity. No

allowance will be made in the event that the quantity based on computations does not equal the estimated quantity.

In case of discrepancy between the quantity shown in the Bid Form for a final pay item and the quantity or summation of quantities for the same item shown on the plans, payment will be based on the quantity shown in the Bid Form.

When an item of work is designated as (P) in the Bid Form, (Document 00400), a portion of the estimated quantity for that item of work shall be eligible for partial payment.

8.4 Final Payment

As soon as practicable after Final Acceptance of the Work, Contractor shall submit to City five (5) copies of a final request for payment for the cost of the Work, which request will show deductions for prior payments and any other amounts to be retained under Section 8.2, Deduction from Payments. The amount determined due, less the amount retained, will be paid. This retained amount will not be due or payable until 35 days after the completion of all of the Work including punch list items and the recording of Notice of Completion and Final Acceptance in the manner provided by law, and until after Contractor has furnished City a release of any and all claims by Contractor or Subcontractors (Document 00650) against City arising by virtue of this Contract, except such claims in definite amounts as Contractor may specifically exempt from the operation of the release and the furnishing of any guaranty.

8.5 Scope of Payment

Payment for all items of Work at the unit or lump sum price shall be considered as full compensation for furnishing all labor, materials, tools, equipment, and incidentals necessary to complete the item of Work, and no additional allowance will be made therefor.

Payment for items of Work which are called for in the Specifications or shown on the Drawings but which are not separately identified in the Bid form shall be compensated as part of the bid price of one or more of the items which are listed, and no additional allowance will be made therefor.

8.6 Substitution Of Securities In Lieu Of Retention

Pursuant to provisions of Public Contract Code Section 22300, substitution of securities for any monies withheld under the Contract Documents to insure performance is permitted under following conditions:

At request and expense of Contractor, securities listed in Section 16430 of the Government Code, bank or savings and loan certificates of deposit, interest bearing demand deposit accounts, standby letters of credit, or any other security mutually agreed to by Contractor and City which are equivalent to the amount withheld under retention provisions of the Contract Documents shall be deposited with Controller or with a state or federally chartered bank in California, as the escrow agent, who shall then pay such monies to Contractor. Upon final acceptance and 35 days after the completion of all of the work including punch list items and the recording of the Notice of Completion, securities shall be returned to Contractor.

Alternatively, Contractor may request and City shall make payment of retentions earned directly to the escrow agent at the expense of Contractor. At the expense of Contractor, Contractor may direct the investment of the payments into securities and Contractor shall receive the interest earned on the investments upon the same terms provided for in this section for securities deposited by Contractor. Upon final acceptance and 35 days after the completion of all of the work including punch list items and the recording of the Notice of Completion, Contractor shall receive from escrow agent all securities, interest, and payments received by the escrow agent from City, pursuant to the terms of this section. Contractor shall pay to each subcontractor, not later than twenty (20) Days after receipt of the payment, the respective amount of interest earned, net of costs attributed to retention withheld from each subcontractor, on the amount of retention withheld to insure the performance of Contractor.

Contractor shall be beneficial owner of securities substituted for monies withheld and shall receive any interest thereon.

Contractor shall enter into escrow agreement according to Document 00680 (Escrow Agreement), as authorized under Public Contract Code Section 22300, specifying amount of securities to be deposited, terms and

conditions of conversion to cash in case of default of Contractor, and termination of escrow upon completion of the Contract Work.

8.7 Effect of Payment

Payment will be made by City, based on City's observations at the Site and the data comprising the Application for Payment. Payment will not be a representation that City has:

- Made exhaustive or continuous on-Site inspections to check the quality or quantity of Work;
- Reviewed construction means, methods, techniques, sequences, or procedures;
- Reviewed copies of requisitions received from Subcontractors and material suppliers and other data requested by City to substantiate Contractor's right to payment; or made examination to ascertain how or for what purpose Contractor has used money previously paid on account of the Contract Sum.

SECTION 9. CLAIMS BY CONTRACTOR

9.1 General

A Contract Interpretation Disputes:

Should it appear to Contractor that the Work to be performed or any of the matters relative to the Contract Documents are not satisfactorily detailed or explained therein, or should any questions arise as to the meaning or intent of the Contract Documents, Contractor shall give written notice to City. Contractor shall bear all costs incurred in the giving of such notice. All issues regarding the interpretation of the Specifications shall be referred to City for interpretation and determination. City shall have the right but not the obligation to affirm or disaffirm any City interpretation of the Plans or Specifications, which affirmance or disaffirmance shall be final. All issues regarding the Contract Documents shall be determined by City whose determination shall be final. If Contractor should disagree with City's determination regarding any aspect of the Contract Documents, Contractor's sole and exclusive remedy is to file a claim in accordance with this Section. Notwithstanding and pending the resolution of any claim, Contractor shall diligently prosecute the Disputed Work (as defined in following paragraphs) to Final Completion.

B Work Disputes:

Should any dispute arise under the Contract Documents respecting the true value of any Work performed, the implementation of the Work required by the Contract Documents, any Work omitted, any extra Work which Contractor may be required to perform or time extensions, respecting the size of any payment to Contractor during the performance of the Contract Documents, or of compliance with Contract Documents procedures, the dispute shall be decided by City and its decision shall be final and conclusive. If Contractor disagrees with City's decision, Contractor's sole and exclusive remedy is to file a claim in accordance with this Section. Notwithstanding and pending the resolution of any claim, Contractor shall diligently prosecute the Disputed Work to Final Completion.

The claim notice and documentation procedure described in this Section applies to all claims and disputes arising under the Contract Documents, including without limitation any claim or dispute by any Subcontractor or material supplier. All Subcontractor and supplier claims of any type shall be brought only through Contractor as provided in this Section. Under no circumstances shall any Subcontractor or supplier make any direct claim against City.

"Claim" means a written demand or written assertion by Contractor seeking, as a matter of right, the payment of money, the adjustment or interpretation of the Contract Documents terms, or other relief arising under or relating to the Contract Documents. In order to qualify as a "claim," the written demand must state that it is a claim submitted under this Section.

A voucher, invoice, payment application, or other routine or authorized form of request for payment is not a claim under the Contract Documents. If such request is disputed as to liability or amount, then the disputed Portion of the submission may be converted to a claim under the Contract Documents by submitting a separate claim in compliance with claim submission requirements.

The provisions of this Section constitute a non-judicial claim settlement procedure, and also a claim presentment procedure by agreement under Section 930.2 of the Government Code, shall survive termination or completion of the Contract Documents, and may not be changed, waived, modified, or its requirements reduced absent a written change order approval by City Council. Contractor shall bear all costs incurred in the preparation and submission of a claim. Pursuant to Government Code Section 930.2, the one-year period in Government Code section 911.2 shall be reduced to 150 days. Any claims presented in accordance with the Government Code shall affirmatively indicate Contractor's prior compliance with the claims procedure herein and previous dispositions under Section 9.2, Procedures, below.

Contractor shall impose the claim notice and documentation requirements in this Contract on Contractor's subcontractors of all tiers, and require them to submit to Contractor all claims against Contractor and/or City within the times and containing the documentation required by this Section. The claim notice and documentation procedure described in this Section applies to all claims and disputes arising under the Contract Documents, whether or not specifically referred to in any specific Portion of the Contract. Government Code Section 930.2 et. seq. applies to this procedure.

9.2 Procedures

Should any clarification, determination, action or inaction by City, Work, or any other event, in the opinion of Contractor, exceed the requirements of or not comply with the Contract Documents, or otherwise result in Contractor seeking additional compensation in time or money for any reason (collectively "Disputed Work"), then Contractor and City shall make good faith attempts to resolve informally any and all such issues, claims and/or disputes. Before commencing the Disputed Work, or within seven (7) Days after Contractor's first knowledge of the Disputed Work, whichever is earlier, Contractor must file a written notice of the Disputed Work with City stating clearly and in detail its objection and reasons for contending the Work or interpretation is outside the requirements of the Contract Documents. If a written notice of Disputed Work is not issued within this time period, or if Contractor proceeds with the Disputed Work without first having given the notice required by this Section, Contractor shall waive its rights to further claim on the specific issue.

City will review Contractor's timely notice of Disputed Work and provide a decision. If, after receiving the decision, Contractor disagrees with it or still considers the Work required of it to be outside of the requirements of the Contract Documents, it shall so notify City, in writing, within seven (7) Days after receiving the decision, that a formal claim will be issued. Within thirty (30) Days of receiving the decision, Contractor shall submit its claim in the form specified herein and all arguments, justification, cost or estimates, schedule analysis, and detailed documentation supporting its position. Contractor's failure to furnish notification within seven (7) Days and all justifying documentation within thirty (30) Days will result in Contractor waiving its right to the subject claim. If Disputed Work persists longer than thirty (30) days, then Contractor shall, every thirty (30) days until the Disputed Work ceases, submit to City a document titled "Claim Update" which shall update and quantify all elements of the Claim as completely as possible. Contractor's failure to submit a Claim Update or to quantify costs every thirty (30) days shall result in waiver of the claim for that thirty (30) day period. Claims or Claim Updates stating that damages will be determined at a later date shall not comply with this Section and shall result in Contractor waiving its claim(s).

Upon receipt of Contractor's formal claim including all arguments, justifications, cost or estimates, schedule analysis, and documentation supporting its position as previously stipulated, City or its designee will review the issue and render a final determination. City may in its discretion conduct an administrative hearing on Contractor's claim, in which case Contractor shall appear, participate, answer questions and inquiries, and present any further evidence or analysis requested by City to evaluate and decide Contractor's claim.

If Contractor's claims at project completion total less than $375,000, then claims resolution shall proceed in the manner prescribed by Section 1.5, Chapter 1, Part 3 of Division 2 of the California Public Contract Code. If such claims exceed $375,000, then Contractor shall prepare a compendium of claims not resolved as a result of these procedures, and submit them in a claim submitted under the Government Claims Act, Government. Code Section 901 *et seq.*, for final investigation and consideration of their settlement prior to initiation of any litigation thereon, as required by Government Code Section 945.4. For all claims under or over $375,000, pursuant to Government Code Section 930.2, the one-year period in Government Code Section 911.2 shall be reduced to 150 days.

Claims shall be calculated in the same manner as Change Orders per Section 3, Scope of Work. Except where provided by law, or elsewhere in these contract documents, if applicable, City shall not be liable for special or consequential damages. Contractor shall be limited in it's recovery on claims to the change order calculations set forth in Section 3, Scope of Work.

9.3 Claim Format

Contractor shall submit the claim justification in the following format: (a) Cover letter and certification of the accuracy of the contents of the claim, (b) summary of claim including underlying facts, entitlement, quantum calculations and Contract Document provisions supporting relief, (c) list of documents relating to claim including specifications, Plans, clarifications/requests for information, schedules, cost calculations, and other supporting documents, (d) chronology of events and correspondence, (e) analysis of claim merit, (f) analysis of claim cost, and (g) attach supporting documents referenced in (c).

9.4 Mediation

All claims not subject to the claim resolution procedures set forth in Section 9.2, Procedures, shall, as a condition precedent to litigation thereon, first be mediated. Mediation shall be non-binding and utilize the services of a mediator mutually acceptable to the parties, and, if the parties cannot agree, a mediator selected by the American Arbitration Association from its panel of approved mediators trained in construction industry mediation. All statutes of limitation shall be tolled from the date of the demand for mediation until a date two weeks following the mediation's conclusion. All unresolved claims shall be submitted to the same mediator. The cost of mediation shall be equally shared.

9.5 Exclusive Remedy

Contractor's performance of its duties and obligations specified in this Section and submission and mediation of a claim as provided in this Section is Contractor's sole and exclusive remedy for the payment of money, extension of time, the adjustment or interpretation of Contract Documents terms or other contractual or tort relief arising from the Work. This exclusive remedy and the limitation of liability (expressed herein and elsewhere throughout the Contract Documents) apply notwithstanding the completion, termination, suspension, cancellation, breach or rescission of the Work or the Contract Documents, negligence or strict liability by City, its representatives, consultants or agents, or the transfer of the Work or the Project to City for any reason whatsoever. Contractor waives all claims of waiver, estoppel, release, bar, or any other type of excuse for non-compliance with the claim submission requirements. Compliance with the claim submission and mediation procedures described in this Section is a condition precedent, and a prerequisite within the meaning of Section 930.6 of the Government Code, to the right to commence litigation or to seek to file a Government Code Claim (where applicable) or to commence any other legal action. No claim or issue not raised in a timely protest and timely claim submitted under this Section may be asserted in any Government Code Claim, in any subsequent litigation, or in any legal action. If Contractor fails to raise any claim(s) or issue(s) in a timely protest and timely claim submitted under this Section, then Contractor may not thereafter assert such claim(s) or issue(s) in any Government Code Claim, subsequent litigation, or legal action. City shall not be deemed to have waived any provision under this Section, if at City's sole discretion, a claim is accepted in a manner not in accord with Section.

END OF DOCUMENT

DOCUMENT 00800

SPECIAL CONDITIONS

PART 1 GENERAL

1.1 SUMMARY

A. Document includes summary of Work including:
- 1.2 Work Covered By Contract Documents
- 1.3 Bid Items
- 1.4 Work Under Other Contracts
- 1.5 Contract Time
- 1.6 Work Sequence
- 1.7 Work Days and Hours
- 1.8 Cooperation of Contractor and Coordination with Other Work
- 1.9 Maintenance, Product Handling, and Protection
- 1.10 Partial Occupancy/Utilization Requirements
- 1.11 Contractor Use of Premises
- 1.12 Lines and Grades
- 1.13 Protection of Existing Property, Structures and Utilities
- 1.14 Damage to Existing Property
- 1.15 Dust Control
- 1.16 Parking
- 1.17 Lay down / Staging Area
- 1.18 Permits
- 1.19 Punch List Verification
- 1.20 Actual Damages for Violations
- 1.21 Unfavorable Construction Conditions
- 1.22 Construction Site Access
- 1.23 Site Administration
- 1.24 Weather Delay
- 1.25 Project Record Documents
- 1.26 City Supplied Materials
- 1.27 Mobilization

- 2.1 Products Ordered In Advance (N/A)
- 2.2 City-Furnished Products

1.2 WORK COVERED BY CONTRACT DOCUMENTS

A. Work generally consists of the removal and replacement of existing portland cement concrete curbs & gutters, sidewalks, drive approaches and ADA ramps as described in the technical specifications.

B. The Work of this Contract includes work covered by unit price costs.

C. Unless provided otherwise in the Contract Documents, all risk of loss to Work covered by Contract Documents shall rest with Contractor until Final Acceptance of the Work.

D. Contractor's use of the premises for trailer, storage and parking is limited to the construction area as indicated on the plans and as approved by the City.

E. Contractor shall be solely responsible for all utilities (including without limitation electricity, water, gas, etc.) at the Site.

F. Existing equipment removed but not reused, as a part of the Work, shall be returned to the City where indicated. Contractor shall carefully remove all equipment, specified or indicated to be salvaged and reused, or to remain the property of City. Contractor shall store and protect salvaged items specified or indicated to be reused in the Work.. Salvaged items not to be reused in the Work, but to remain City's property shall be delivered by Contractor in good condition to City.

Any items indicated to be salvaged which are damaged in removal, storage, or handling, through carelessness or improper procedures, shall be replaced by Contractor in kind or with new items. Contractor may furnish and install new items, in exchange for those indicated to be salvaged, in which case such removed items will become Contractor's property. Existing materials and equipment, removed by Contractor, shall not be reused in the Work except where so specified or indicated.

G. This Document and Document 00700 (General Conditions) and the Special Conditions includes measures that Contractor shall follow to execute the work.

1.3 BID ITEMS

Bid Items

A. Any Bid Item may be deleted from the Work and Contract Sum, in total or in part, prior to or after award of Contract, without compensation in any form or adjustment of other Bid Items or prices therefore, in accordance with Document 00700 (General Conditions).

B. Payment of all items is subject to the provisions of the Document 00700 (General Conditions).

C. For all Bid Items, furnish and install all work indicated and described in Specifications and all other Contract Documents, including connections to existing systems. Work and requirements applicable to each individual Bid Item, or unit of Work, shall be deemed incorporated into the description of each Bid Item. Bidder should take particular notice that any and all items of Work, called for in the Construction Documents, but not included in a description of any specific bid item, shall be considered as included in one (1) or more of the bid items and that no additional compensation for those items of Work, beyond the Base Bid, will be allowed. Work of this nature includes, but is not limited to, such items as flagmen, water, all safety requirements, or work and materials required to provide public convenience and safety, barricades, lights, vehicular detours, and pedestrian walkways.

D. For Lump Sum Bid items, bidder shall determine and include in its pricing all materials, labor, and equipment necessary to complete each Bid Item as shown and specified in the Contract Documents.

1.4 WORK UNDER OTHER CONTRACTS

Work at the site performed by others may include utility main replacements by utility's contractor and asphalt maintenance by City Contractor.

1.5 CONTRACT TIME

The Contract Time will commence on the date indicated in the Notice to Proceed. City may give a Notice to Proceed at any time within 30 Days after the Notice of Award. Based on Council authorization anticipated on April 7, 2015, Notice may be given on or before April 21, 2015. Contractor shall not do any Work at the Site prior to the date on which Contract Time commences.

Contractor shall achieve Final Completion of the entire Work and be ready for Final Payment in accordance with Section 00700 (General Conditions) within 110working days.

1.6 WORK SEQUENCE

A. Construct Work in stages and at times to accommodate City operational requirements during the construction period; coordinate construction schedule and operations with City.

B. Contractor shall allow safe passage thru the construction area at all times. The patrons must be allowed to use the facilities around the fountain at all times during construction.

C. Contractor acknowledges that shoring may be required to maintain a safe excavation and protect facilities or pipelines, including both existing and recently constructed under this Contract. All expenses for shoring of excavations for construction of basins and pipelines shall be included.

D. When required by the specifications or contract documents or plans the Contractor shall follow the sequence of operations as set fourth therein.

1.7 WORK DAYS AND HOURS

A. Work Days and hours: Monday-Friday inclusive, 8:00 a.m.-5:00 p.m. local time except as otherwise allowed or restricted in the Special Conditions, Traffic Control Requirements, or as otherwise approved

by the City. No work, equipment, or hauling of materials is allowed within the public right of way near school during school drop off or pick up. See appendix A for a list of streets near schools.

B. Work at the Site on weekends or holidays is not permitted, unless Contractor requests otherwise from City in writing at least 2 working days in advance and City approves in its sole discretion. In the case of Work by Contractor after normal working hours, Contractor shall be responsible for any additional inspection costs incurred by the City. Such costs may be withheld from any succeeding monthly progress payment.

C. Connections to Existing Facilities. Unless otherwise specified or indicated, Contractor shall make all necessary connections to existing facilities, including structures, drain lines, and utilities such as water, sewer, gas, telephone, and electric. In each case, Contractor shall receive permission from City or the owning utility prior to undertaking connections and coordinate as needed to accommodate the facilities operations. Contractor shall protect facilities against deleterious substances and damage.

D. Road Shutdown. Contractor shall execute the Work while roads are in operation except for the periods of permitted shutdown. For shutdown periods, Contractor shall prepare and submit a detailed plan that includes shutdown schedule, planned sequence of work, milestones and projected times of completions of activities, any anticipated problems, Contractor's supervisory personnel, actions desired of City and staff, and contingency plans. Contractor shall allow sufficient time for review and re-submittal of the shutdown plan until acceptable to City. Contractor shall employ sufficient labor, superintendence, and equipment on a 24-hour, 7 days a week basis during shutdown and other operational disruptions to complete Work within the specified periods at no additional cost to the City. Once initiated, Work may proceed on extra shift or around-the-clock basis as necessary. When required to minimize treatment process interruptions while complying with specified sequencing constraints, Contractor shall provide power, lighting, controls, instrumentation, and safety devices.

1.8 COOPERATION OF CONTRACTOR AND COORDINATION WITH OTHER WORK

A. Coordinate with City and any City forces, or other contractors and forces, as required by Document 00700 (General Conditions) and this document. City's facility will be accessible and useable at all times.

B. Employ a full time coordinator to constantly review Contract Documents, submittals, changes, and prepare overlay drawings as necessary to avoid conflicts, errors, omissions and untimely construction.

C. The existing facilities must be kept closed to the public for the duration of the project. Contractor is to secure the site from public access at all times. This may require the use of a security guard, signage, perimeter fencing and other measures. All payment for site security shall be included in Bid.

D. Contractor shall not shut down or disconnect any part of the existing utility system without express permission of the Engineer and the owner of the utility. Contractor shall give such notice of approved utility shutdowns as may be required by the Engineer and the owner of the utility.

1.9 MAINTENANCE, PRODUCT HANDLING, AND PROTECTION

A. Transport, deliver, handle, and store materials and equipment at the Site in such a manner as to prevent the breakage, damage or intrusions of foreign matter or moisture, and otherwise to prevent damage.

B. Hazardous substance compliance: Provide City with copies of the OSHA Material Safety Data Sheets (MSDS) for all products containing a hazardous substance, examples: Adhesives, paints, sealants, and the like.

C. Packaging: Provide packaged material in manufacturer's original containers with seals unbroken and labels intact until incorporated into the Work.

D. Remove all damaged or otherwise unsuitable material and equipment promptly from the Site.

E. Protection: Protect all finished surfaces.

F. Asbestos Removal: If, during the progress of the Work, suspected asbestos-containing products are identified, Contractor shall stop work in the affected area and engage an asbestos removal Subcontractor to verify the materials and, if necessary, encapsulate, enclose, or remove and dispose of all asbestos in accordance with current regulations of the Environmental Protection Agency and the U. S. Department of Labor – Occupational Safety and Health Administration, the state asbestos regulating agency, and any local government agency. Payment for such work will be made by Change Order.

Asbestos Removal Subcontractor's Qualifications. The Subcontractor for asbestos removal shall be regularly engaged in this type of activity and shall be familiar with the regulations that govern this work. The Subcontractor shall demonstrate to the satisfaction of City that it has successfully completed at least three asbestos removal projects, that it has the necessary staff and equipment to perform the work, and that it has an approved site for disposal of the asbestos. Liability insurance covering the asbestos abatement work shall be provided as specified in the Supplementary Conditions.

Asbestos Removal Methods. The asbestos removal Subcontractor shall submit a work plan of its proposed removal procedure to City before beginning work and shall certify that the methods are in full compliance with the governing regulations. The work plan shall cover all aspects of the removal, including health and safety of employees and building occupants, hygiene facilities, employee certification, clearance criteria, transportation and disposal, enclosure techniques, and other techniques appropriate for the proposed work.

G. Cost of maintenance of systems and equipment prior to Final Acceptance will be considered as included in prices bid and no direct or additional payment will be made therefore.

1.10 PARTIAL OCCUPANCY/UTILIZATION REQUIREMENTS

A. Allow City to take possession of and use any completed or partially completed portion of the Work during the progress of the Work as soon as is possible without interference to the Work.
B. Possession, use of Work, and placement and installation of equipment by City shall not in any way evidence the completion of the Work or any part of it.
C. Contractor shall not be held responsible for damage to the occupied part of the Work resulting from City occupancy.
D. Make available, in areas occupied, on a 24-hour per day and 7-day per week basis if required, any utility services in condition to be put in operation at the time of occupancy.
   1. Responsibility for operation and maintenance of said equipment shall remain with Contractor.
   2. Make, and City shall certify, an itemized list of each piece of equipment so operated with the date operation commences.
   3. Itemized list noted above shall be basis for commencement of warranty period for equipment.
   4. City shall pay for utility cost arising out of occupancy by City during construction.
E. Use and occupancy by City prior to acceptance of Work does not relieve Contractor of its responsibility to maintain insurance and bonds required under the Contract until entire Work is completed and accepted by City.
F. Prior to date of Final Acceptance of the Work by City, all necessary repairs or renewals in Work or part thereof so used, not due to ordinary wear and tear, but due to defective materials or workmanship or to operations of Contractor, shall be made at expense of Contractor, as required in Document 00700 (General Conditions).
G. Use by City of Work or part thereof as contemplated by this Document 00800 shall in no case be construed as constituting acceptance of Work or any part thereof. Such use shall neither relieve Contractor of any responsibilities under Contract, nor act as waiver by City of any of the conditions thereof.
H. City may specify in the Contract Documents that portions of the Work, including electrical systems or separate structures, shall be substantially completed on dates described in preceding paragraphs of this Document 00800, if any, prior to substantial completion of all of the Work. Notify City in writing when Contractor considers any such part of the Work ready for its intended use and substantially complete and request City to issue a Certificate of Substantial Completion for that part of the Work.

1.11 CONTRACTOR USE OF PREMISES

A. Confine operations at Site to areas permitted by Contract Documents, permits, ordinances, and laws.
B. Do not unreasonably encumber Project Site with materials or equipment.
C. Assume full responsibility for protection and safekeeping of products stored on premises.
D. Move any stored products that interfere with operations of City or other contractor.
E. Parking, storage, staging, trailer and work areas shall be coordinated and approved by the City and comply with all other Contract documents requirements. Contractor's use of the premises for trailer, storage and parking is limited to areas the City will allow.

1.12 LINES AND GRADES

A. All Work shall be done to existing lines, grades, and elevations.

B. The Contractor is to provide all surveying for the project. The City will not be providing any points for horizontal or vertical controls. All additional survey, layout, and measurement work shall be performed by Contractor as a part of the Work and paid for in various items of work.
C. Contractor shall provide at its cost an experienced instrument person, competent assistants, and such instruments, tools, stakes and other materials required to complete the survey, layout, and measurement work. In addition, Contractor shall furnish, at its cost, competent persons and such tools, stakes, and other materials as City (and/or any Engineer) may require in establishing or designating control points, or in checking survey, layout, and measurement work performed by Contractor.
D. Contractor shall keep City informed, a reasonable time in advance, of the times and places at which it wishes to do Work, so that any checking deemed necessary by City may be done with minimum inconvenience to City and minimum delay to Contractor.
E. Contractor shall remove and reconstruct Work that is improperly located.

1.13 PROTECTION OF EXISTING PROPERTY, STRUCTURES AND UTILITIES

A. The Drawings may indicate existing above-grade and below-grade structures, drainage lines, storm drains, sewers, water, gas, electrical, water, phone and data cable and other similar items and utilities that are known to City.
B. Contractor shall locate these known existing installations before proceeding with trenching or other operations which may cause damage, shall maintain them in service where appropriate, and shall repair any damage to them caused by the Work, at no increase in Contract Sum.
C. Additional utilities whose locations are unknown to City are suspected to exist. Contractor must be alert to their existence. If additional utilities are encountered, Contractor must immediately report to City for disposition.
D. In addition to reporting, if a utility is damaged, Contractor must take appropriate action as provided in Document 00700 (General Conditions).
E. Additional compensation or extension of time on account of utilities not indicated or otherwise brought to Contractor's attention including reasonable action taken to protect or repair damage shall be determined as provided in Document 00700 (General Conditions).
F. Contractor shall carry out construction activities in a manner that does not disrupt privacy, access to private property, or traffic, except as allowed by permit.

1.14 DAMAGE TO EXISTING PROPERTY

A. Contractor will be responsible for any damage to existing structures, Work, materials, or equipment because of its operations and shall repair or replace any damaged structures, Work, materials, or equipment to the satisfaction of, and at no additional cost to, City.
B. Contractor shall protect all existing structures and property from damage and shall provide bracing, shoring, or other work necessary for such protection.
C. Contractor shall be responsible for all damage to streets, roads, curbs, sidewalks, highways, shoulders, ditches, embankments, culverts, bridges, or other public or private property, which may be caused by transporting equipment, materials, or workers to or from the Work. Contractor shall make satisfactory and acceptable arrangements with the agency having jurisdiction over the damaged property concerning its repair or replacement.

1.15 DUST CONTROL

A. Contractor shall take reasonable measures to prevent unnecessary dust. The following items shall be specifically implemented to control dust:
   1. All construction locations with active excavation shall be watered at least twice daily or more often as necessary.
   2. Cover all trucks hauling soil, sand, and other loose materials; or require all trucks to maintain at least two feet of freeboard.
   3. Pave, apply water daily, or apply non-toxic soil stabilizers on all un-paved access roads, parking areas, and staging areas at construction site.
   4. Sweep daily or more often as necessary, with water sweepers all paved access roads, parking areas, and staging areas at construction sites during project.
   5. Enclose, cover, water twice daily, or apply non-toxic soil binders to exposed stockpiles (dirt, sand, etc.)

6. Limit the speed of all construction vehicles to 5 miles per hour while on the Site.

B. Buildings, swimming pools, or operating facilities which may be affected adversely by dust shall be adequately protected from dust. Existing and new machinery, motors, instrument panels, or similar equipment shall be protected by suitable dust screens. Proper ventilation shall be included with dust screens.

1.16 PARKING

Contractor shall provide and maintain suitable parking areas within the construction area for the use of all construction workers and others performing work or furnishing services in connection with the Project, as required to avoid any need for parking personal vehicles where they may interfere with public traffic, City's operations, or any construction activities.

1.17 LAYDOWN/STAGING AREA

Contractor shall utilize the area approved by the City for storage of all construction materials. This area shall be fenced and locked by Contractor for security purposes. Contractor is not authorized to park equipment overnight or stockpile on the street. Contractor may park equipment and stockpile at locations to be approved by the Engineer.

1.18 PERMITS

Applicable permits: Permits, agreements, or written authorizations that are known by the City to apply to this project are listed below:

City of Cupertino encroachment permit – will be issued at no cost to Contractor

1.19 PUNCH LIST VERIFICATION

A punch list examination will be performed upon Substantial Completion of Work. One follow-up review of punch list items for each discipline will be provided. If multiple Site visits are required to review punch list items, due to incompleteness of the Work by Contractor, Contractor may be required to reimburse City for these visits.

1.20 ACTUAL DAMAGES FOR VIOLATIONS

A. In addition to damages which are impracticable or extremely difficult to determine, for which liquidated damages will be assessed as described in Document 00700 (General Conditions) and Document 00520 (Contract), City may incur actual damages resulting from loss of use of any permit described in this Document, or from use in violation of legal or regulatory requirements where the violations result from Contractor's activities. Violations or threatened violations may subject the City to fines and/or other costs or civil liabilities.

B. Contractor shall be liable for and shall pay City the amount of any actual losses in addition to liquidated damages or other remedies provided by the Contract Documents.

C. The amount of liquidated damages provided in Document 00520 (Contract) is not intended to include, nor does the amount include, any damages incurred by City for reasons other those listed in that paragraph. Any money due or to become due to Contractor may be retained by City to cover both the liquidated and the actual damages described above and, should such money not be sufficient to cover such damages, City shall have the right to recover the balance from Contractor or its sureties.

1.21 UNFAVORABLE CONSTRUCTION CONDITIONS

During unfavorable weather, wet ground, or other unsuitable construction conditions, Contractor shall confine its operations to Work, which will not be affected adversely by such conditions. No portion of the Work shall be constructed under conditions, which would affect adversely the quality or efficiency thereof, unless special means or precautions are taken by Contractor to perform the Work in a proper and satisfactory manner.

1.22 CONSTRUCTION SITE ACCESS

Contractor shall, at all times, limit access to the Site to necessary personnel only. All personnel associated with construction of the Project shall enter the site through Contractor's access gate. Access for construction personnel shall be limited to the hours between 8:00 a.m. and 5:00 p.m. local time. Contractor is to secure the site from public access at all times. This may require the use of a security guard, signage, perimeter fencing and other measures. All payment for site security shall be included in Bid.

1.23 SITE ADMINISTRATION

Contractor shall be responsible for all areas of the Site used by it and by all Subcontractors in the performance of the Work. Contractor shall exert full control over the actions of all employees and other persons with respect to the use and preservation of property and existing facilities, except such controls as may be specifically reserved to City or others. Contractor shall have the right to exclude from the Site all persons who have no purpose related to the Work or its inspection, and may require all persons on the Site (except City's employees) to observe the same regulations Contractor requires of its employees.

1.24 WEATHER DELAY

Not applicable.

1.25 PROJECT RECORD DOCUMENTS

Contractor shall prepare Record Drawings and Specification in accordance with Document 00700, recording and tracking changes in a timely manner. Contractor shall make copies of the annotated Project Record Drawings and Specifications available to City and the Engineer of Record at intervals convenient to the Engineer of Record, who will be responsible for the preparation of the Final Record Drawings and Specifications.

1.26 CITY SUPPLIED MATERIALS

See Technical Specifications

1.26 MOBILIZATION

Mobilization shall conform to the provisions in Section 11, "Mobilization" of the Standard Specifications.

PART 2 PRODUCTS

2.1 PRODUCTS ORDERED IN ADVANCE (N/A)

2.2 PRODUCTS PROVIDED BY CONTRACTOR

See Technical Specifications

2.3 CITY-FURNISHED PRODUCTS

No materials are furnished by the City.

PART 3 EXECUTION –

3.1 COMMENCEMENT OF CONSTRUCTION ACTIVITIES TO BEGIN ON STREETS NEAR SCHOOLS

A. The contractor is directed to commence work on streets near school at the beginning of construction activities with the intent to complete all work and activities on streets near schools on or before June 11, 2015.

END OF DOCUMENT

SECTION 00820

TRAFFIC CONTROL REQUIREMENTS

The Contractor shall submit traffic control plans to the Engineer for approval five (5) working days prior to the pre-construction meeting. Traffic control plans shall conform to the requirements in item number 24 below. All cost and expense for traffic control shall be included in the bid prices for various bid items and no special compensation shall be allowed.

1. The Contractor shall conduct operations and schedule cleanup so as to cause the least possible obstruction and inconvenience to traffic, pedestrians, cyclists and adjacent property owners. All work areas shall be swept clean at the end of each day's work and at other times when directed by the Engineer. A mobile street sweeper shall be used wherever practical and dust shall be suppressed to the satisfaction of the Engineer.

2. The Contractor shall protect open excavations, trenches, and such during construction with fences, covers, and railings as required, together with signs, lights, and other warning devices sufficient to maintain safe pedestrian, bicycle and vehicular traffic to the satisfaction of the Engineer. No open excavations will be allowed over Saturday or Sunday.

3. Damage done by the Contractor during the course of the work to adjacent City, public or private property shall be repaired in kind, or as directed by the Engineer, at the Contractor's expense. This includes the repair of traffic loop detectors, striping, signing, curb markings, etc. Loop detectors must be repaired within one week of the damage.

4. The Contractor shall remove all forms, debris, and undesirable material from the job site at the end of each work day. After each site has been completed, the Contractor shall restore planting areas and other areas abutting the work to the condition existing at the start of work.

5. The work of restoration, including backfilling, repair of existing systems (irrigation, etc.), transitioning to existing improvements and cleanup, at each location, shall be diligently pursued to completion and no location shall the work be left partially completed for more than seven working days.

6. No stockpiling of materials or parking of equipment during non-working hours will be allowed on City property, i.e., streets, alleys, parking lots, sidewalks, etc.

7. The Contractor's employees are subject to all parking regulations in effect in the City of Cupertino.

8. The Engineer shall have the right to limit the amount of removed concrete which may be opened or partly opened at any time. No more than 300 feet of removed concrete shall be left open at any one time.

9. All excavations must be backfilled or properly delineated for pedestrian / vehicle traffic at the end of each work day.

10. The Contractor shall not remove the barricades in the street at any given location until the asphalt concrete patching adjacent to the gutter has been done and a hazard to bicycles, pedestrians and motorists no longer exists.

11. Spillage resulting from hauling operations along or across any public traveled way shall be removed immediately by the Contractor at his expense.

12. The Contractor shall place barricades 50 feet on center at the gutter joints and provide one working flasher for each barricade and shall insure that each flasher is maintained in working condition while in use. The Contractor shall not remove the barricades in the street at any given location until the asphalt concrete patching adjacent to the gutter has been done and the hazard to bicyclists and motorists no longer exist.

13. Contractor shall maintain access to all driveways except when actually doing construction within the driveway boundaries, at which time partial access will be maintained unless alternate arrangements can be made with the property owners or tenants in advance. If the driveway to any garage or parking area is to be closed for construction work, prior written approval must be obtained from the property owners and the Engineer. Notice shall be posted by the Contractor 72 hours in advance stating the approximate time the driveway will be closed and reopened.

14. City of Cupertino Truck Routes for all hauling shall be used, as described in Section 10 of the Special Provisions.

15. Contractor shall obtain a Transportation permit from the Public Works Department for any vehicle which exceeds weight or dimensions prescribed in the California Vehicle Code.

16. The Contractor shall supply, place, and maintain all necessary traffic control devices during construction in accordance with the applicable requirements of the City of Cupertino, the California Manual of Uniform Traffic Control Devices, and the traffic control plans approved by the City.

17. All traffic control devices shall conform to Section 12 of the Caltrans Standard Specifications. They are to be in good condition and sufficiently clean so as to be easily visible to traffic. All signs shall be placed in positions where they convey their message most effectively or as shown on the approved traffic control plan.

18. Type II and III barricades with working flashers shall be used. At least one working flashing light must be installed on each barricade for night work. Flashing lights must be maintained in good working order throughout the duration of the work. Crosswalk closing barricades shall be Type II with a 6" orange border at the base.

19. Signs to be used for traffic control shall conform to the requirements of the California Manual of Uniform Traffic Control Devices. Signs that are attached to existing poles shall not cause any damage to the poles when they are attached or removed. All of the hardware that is used when attaching signs to existing poles shall be completely removed from the poles when the signs are

removed. If a construction sign is required in an area where it cannot be attached to an existing pole, it shall be attached to a 4" x 4" wooden pole. The distance from the ground surface to the bottom of the sign shall be seven (7) feet.

20. A flag-type high level warning device with three or more flags shall be used for each direction of traffic affected, generally placed within the taper area.

21. Flashing arrow boards shall be Type A or Type II as described in Section 6F.56 of the California Manual of Uniform Traffic Control Devices. Flashing arrow boards are required for lane shifts and reductions and may be required for nighttime work.

22. Dated "No Parking Tow Away" signs shall be posted a minimum of 48 hours in advance of all work requiring that cars not be parked on the street. Date and time of work shall be written on signs in two-inch-high letters with a ¼-inch felt black marker. Signs shall be posted 50 feet on center and removed immediately after the work is completed. The Contractor must notify Cupertino Code Enforcement Officers at (408) 777-3182 with locations of posting to verify forty eight (48) hour notice.

23. Traffic Control Plans. A traffic control plan consistent with the following generally applicable conditions must be approved by the Public Works Department prior to the pre-construction meeting. The Contractor shall supply, place, and maintain all necessary traffic control devices in accordance with the California Manual of Uniform Traffic Control Devices and the following conditions:

- Traffic control plans will include a schedule of construction showing each phase of work and the anticipated method of handling traffic for each phase. Traffic control plans will include a scaled drawing of the street, lane configuration, parking, sidewalk, work area, and the location of signs and cones, etc., to warn, direct, and guide the traffic. For all major intersections, the traffic control plan shall reflect actual (not typical) intersection layout and indicate islands, medians, lane lines, bike lanes, nearby driveways, and note all pavement and lane widths.

- In general, Contractor shall maintain all vehicular, pedestrian, and bike movements. No total closure of any arterial or collector street will be permitted. City may allow closure of local residential streets but Contractor shall always maintain local and emergency access.

- The Contractor shall maintain one lane of traffic in each direction at all times on all streets. The clear width of the lane shall be a minimum of 10 feet.

- A minimum four feet clear sidewalk shall be maintained unless the work makes closure unavoidable, in which case the sidewalk may be closed while working, subject to the approval of the Engineer. However, an alternate pedestrian facility must be provided for the duration of the closure. At intersections, work will be permitted at one corner at a time so pedestrian movements can be maintained through the intersection.

24. Work shall not restrict visibility of any traffic control device.

25. No work will be permitted within 1500 feet of school grounds until after 9:00 a.m. on school days. Other special restrictions may be required at heavily used school crossings or school commute routes beyond 1500 feet from the school grounds as deemed necessary for student safety by the Engineer.

26. No closure of lanes on arterial and collector streets will be permitted between the hours of 7 and 9 a.m. and 3:30 and 7 p. m.

27. If work will impact transit stops or transit routes, Contractor shall be required to contact Santa Clara Valley Transportation Authority or other affected transit companies to address relocation of facilities or rerouting of buses prior to submitting traffic control plan. Traffic control plan should indicate what actions are being taken with regard to transit services.

28. Any work within 150 feet of any signalized intersection should be coordinated with the Traffic Signal Technician at (408) 777-1366.

29. All signs and other warning devices shall be provided by the Contractor and shall become his property after completion of the Contract. The cost of providing, installing and maintaining signs, lights, caution tape, delineators, flares, barricades and other facilities as directed by the Engineer for the convenience and direction of public traffic shall be included in the prices paid for the various items of work involved in the project.

30. The above requirements are a minimum and do not limit the Contractor's responsibility of doing all that is practical and necessary to ensure the safety of workers, pedestrians, bicyclists, and motorists. The Contractor shall conform to the above traffic control requirements which are generally applicable to most common situations. Based on the nature of a job, additional conditions or exceptions to the above conditions may be necessary.

DOCUMENT 00821

INSURANCE

A. At or before the date specified in Document 00200 (Instructions to Bidders), Contractor shall furnish to City satisfactory proof that Contractor has taken out for the entire period covered by the Contract the following classes of insurance in the form and with limits and deductibles specified below:

1. Comprehensive General Liability Insurance covering claims for personal injury, bodily injury and property damage arising out of the Work and in a form providing coverage not less than that of a standard Commercial General Liability Insurance policy ("Occurrence Form"). Such insurance shall provide for all operations and include independent contractors, products liability, completed operations for one year after Final Completion of the last Phase to be completed and acceptance of the final payment for the Work, contractual liability, and coverage for explosion, collapse and underground hazards. The limits of such insurance shall not be coverage of less than $2,000,000 each occurrence, $4,000,000 general aggregate limit. The policies shall be endorsed to provide Broad Form Property Damage Coverage.
2. Comprehensive Automobile Liability Insurance covering all owned, non-owned, and hired vehicles. Such insurance shall provide coverage not less than the standard Comprehensive Automobile Liability policy with limits not less than $1,000,000 each person Bodily Injury, $1,000,000 each occurrence Bodily Injury, and $1,000,000 each occurrence Property Damage.
3. All-Risk Course of Construction Insurance **N/A** for physical loss or damage to the Work, temporary buildings, falsework, and materials and equipment in transit, and shall insure against at least the following perils or causes of loss: fire, lightning, extended coverage, theft, vandalism and malicious mischief, earthquake, collapse, debris removal, demolition occasioned by enforcement of Laws, water damage, flood, and damage caused by frost and freezing, in the amount of 100 percent of the completed value of the Work to be performed under this Contract. Deductible shall not exceed $25,000. Each loss shall be borne by Contractor.
4. Workers' Compensation Insurance for all persons whom the Contractor may employ in carrying out Work contemplated under Contract Documents, in accordance with the Act of Legislature of State of California, known as "Workers' Compensation Insurance and Safety Act," approved May 26, 1913, and all acts amendatory or supplemental thereto, in the statutory amount, $1,000,000 each occurrence.

B. All policies of insurance shall be placed with insurers acceptable to City. The insurance underwriter(s) must have an A. M. Best Company rating of A, 7 or better or otherwise acceptable to the City. Required minimum amounts of insurance may be increased should conditions of Work, in opinion of City, warrant such increase. Contractor shall increase required insurance amounts upon direction by City.

C. Required Endorsements: The policies required under paragraphs A.1, A.2 and A.3 of this Document shall be endorsed as follows:

1. Name the City of Cupertino, a Municipal Corporation of the State of California, its City Council, and their employees, representatives, consultants (including without limitation Consulting Engineer), and agents, and Engineers, as additional insureds, but only with respect to liability arising out of the activities of the named insured.
2. Each such policy shall apply separately to each insured against whom claim is made or suit is brought, except with respect to the limit of the insurance company's liability required under paragraphs A.1, A.2 and A.3 of this Document 00821.(Endorsement of Aggregate Limits of Insurance Per Project)
3. Insurance shall be primary and no other insurance or self-insured retention carried or held by City shall be called upon to contribute to a loss covered by insurance for the named insured.
4. Insurance shall contain a provision requiring the insurance carriers to waive their rights of subrogation against City and all additional insureds, as well as other insurance carriers for the Work.

D. Certificates of insurance and endorsements shall be on forms provided in Document 00530, (Insurance Forms) have clearly typed thereon City Project Number and title of Contract Documents. Written notice of cancellation, non-renewal, or reduction in coverage of any policy shall be mailed to City (Attention: Contract Administration/Inspection) at the address listed in Document 00520 (Contract), 30 Days in advance of the effective date of the cancellation, non-renewal, or reduction in coverage. Contractor shall maintain insurance in full force and effect during entire period of performance of Contract Documents, the following insurance in amounts not less than the amounts specified. Contractor shall keep insurance in force during warranty and guarantee periods, except that Contractor may discontinue All-Risk Course of Construction Insurance after Final Payment. At time of making

application for extension of time, and during all periods exceeding the Contract Time resulting from any cause, Contractor shall submit evidence that insurance policies will be in effect during requested additional period of time. Upon City's request, Contractor shall submit to City, within 30 Days, copies of the actual insurance policies or renewals or replacements.

E. Contractor shall pay all insurance premiums, including any charges for required waivers of subrogation or the endorsement of additional insureds. If Contractor fails to maintain insurance, City may take out comparable insurance, and deduct and retain amount of premium from any sums due Contractor under Contract Documents.

F. If injury occurs to any employee of Contractor, Subcontractor or sub-subcontractor for which the employee, or the employee's dependents in the event of employee's death, is entitled to compensation from City under provisions of the Workers' Compensation Insurance and Safety Act, as amended, or for which compensation is claimed from City, City may retain out of sums due Contractor under Contract Documents, amount sufficient to cover such compensation, as fixed by the Act, as amended, until such compensation is paid, or until it is determined that no compensation is due. If City is compelled to pay compensation, City may, in its discretion, either deduct and retain from the Contract Sum the amount so paid, or require Contractor to reimburse City.

G. Nothing in this Document 00821 shall be construed as limiting in any way the extent to which Contractor or any Subcontractor may be held responsible for payment of damages resulting from their operations.

H. Except that Subcontractors need to obtain coverage of not less than $2,000,000 each occurrence, $4,000,000 general aggregate limit of Comprehensive General Liability insurance, all Subcontractors shall maintain the same insurance required to be maintained by Contractor with respect to their portions of the Work, and Contractor shall cause the Subcontractors to furnish proof thereof to City within ten Days of City's request.

I. The following provisions apply to any licensed professional engaged by Contractor to perform portions of the Work ("Professional").

1. Each Professional shall maintain the following insurance at its sole cost and expense:

   a. Provided such insurance is customarily required by City when professionals engaged in the profession practiced by Professional directly contract with City, Professional Liability Insurance, insuring against professional errors and omissions arising from Professional's work on the Project, in an amount not less than $1,000,000 combined single limit for each occurrence. If Professional cannot provide an occurrence policy, Professional shall provide insurance covering claims made as a result of performance of Work on this Project and shall maintain such insurance in effect for not less than two years following Final Completion of the Project.

   b. All insurance required by paragraphs A.1, A.2 and A.4 of this Document 00821. Professional shall satisfy all other provisions of paragraphs A, B, C, D, E and F of this Document 00821 relating to that insurance, including without limitation providing required insurance certificates (containing the required endorsements) before commencing its Work on the Project.

J. If required by City, Contractor shall obtain and maintain Contractor's Pollution Legal Liability Insurance in a form, with limits, and from an insuring entity reasonably satisfactory to City.

END OF DOCUMENT

DOCUMENT 00822

APPRENTICESHIP PROGRAM

Contractor and Subcontractors shall comply with the requirements of California Labor Code Sections 1776, 1777.5, and 1777.6 concerning the employment of apprentices by Contractor or Subcontractors. Willful failure to comply may result in penalties, including loss of the right to Bid on or receive public works contracts.

Section 1777.5, as amended, requires a Contractor or Subcontractor employing tradespersons in any apprenticeable occupation to apply to the joint apprenticeship committee nearest the site of a public works project and which administers the apprenticeship program in that trade for a certification of approval. The certificate shall also fix the ratio of apprentices to journeypersons that will be used in performance of the Contract. The ratio of work performed by apprentices to journeypersons in such cases shall not be less than one hour of apprentices work for every five hours of labor performed by journeypersons (the minimum ratio for the land surveyor classification shall not be less than one apprentice for each five journeypersons), except:

A. When unemployment for the previous three-month period in the area exceeds an average of 15 percent;

B. When the number of apprentices in training in the area exceeds a ratio of one to five;

C. When a trade can show that it is replacing at least 1/30 of its membership through apprenticeship training on an annual basis state-wide or locally; or

D. Assignment of an apprentice to any work performed under a public works contract would create a condition which would jeopardize his or her life or the life, safety, or property of fellow employees or the public at large or if the specific task to which the apprentice is to be assigned is of such a nature that training cannot be provided by a journeyperson.

Contractor is required to make contributions to funds established for administration of apprenticeship programs if Contractor employs registered apprentices or journeypersons in any apprenticeable trade on such contracts and if other contractors on the public works site are making such contributions.

Information relative to apprenticeship standards, wage schedules, and other requirements may be obtained from the Director of the California Department of Industrial Relations, or from the Division of Apprenticeship Standards and its branch offices.

END OF DOCUMENT

TECHNICAL SPECIFICATIONS

DOCUMENT 01010

SUMMARY OF WORK

PART 1 – GENERAL

1.01 DESCRIPTION

The work to be done is maintenance type work and consists, in general, of the removal and replacement of existing portland cement concrete curb & gutters, sidewalks, driveway approaches, accessible ramps, median curbs, asphalt replacement adjacent to portland cement concrete work, flat work, and tree root barriers, as required. The work may also include the removal and replacement of valley gutters, installation of new accessible curb ramps and median island flatwork as noted.

The majority of the work consists of removal and replacement of portland cement concrete curb & gutter and sidewalk where drainage problems exist or where displacements may become a public safety hazard. The improvements will be replaced over existing base material in most cases. When it is necessary to remove pavement adjacent to the lip of the gutter, replacement of asphalt concrete pavement will be completed by the Contractor.

The work has been divided into two categories based on the volume of the portland cement concrete placed in an area. A third category of work, independent of volume and location, is also detailed.

Contractor shall complete all work within school routes by June 11 , 2015 (see attachment A, attend a required pre-construction meeting, and shall conform to Sections 39, 73, 92 and 94 of the State of California, Department of Transportation, Standard Specifications latest edition.

1.02 MATERIALSPORTLAND CEMENT CONCRETE:
Portland Cement Concrete shall be Class A concretehave one (1”) inch maximum combined aggregate grading, conforming to Section 90-1.02C(4)(d) of the Standard Specifications. Concrete shall contain not less than six (6) sacks (564 pounds) of cementitious material per cubic yard

PORTLAND CEMENT:
All cement used shall be of one brand and shall conform to A.S.T.M. C150 Type II Supplementary Cementitious Materials shall conform to Section 90-1.02B(3). *Results of ce*rtified tests made by recognized testing laboratory shall be furnished by the cement manufacturer on request of the Engineer

AGGREGATES:
Aggregates for portland cement concrete shall conform to Section 90-2.02C of the State of California, Department of Transportation, Standard Specifications latest edition.

Combined aggregate grading shall conform to the one (1") inch maximum requirements of Section 90-1.02C(4)(d) of the State of California, Department of Transportation, Standard Specifications latest edition.

WATER:
Water for washing aggregates and for mixing portland cement concrete shall conform to Section 90--1.02Dof the State of California, Department of Transportation, Standard Specifications latest edition.

ADMIXTURES:
No admixtures, accelerators, or retarders shall be allowed without the express approval of the Engineer.

EXPANSION JOINTS:
Expansion joints shall consist of prepared strips of three-eighths (3/8") inch thick premolded joint filler conforming to the specifications of A.S.T.M. Designation: D-1751.

CURING:
All portland cement concrete surfaces shall be cured using a portland cement concrete curing compound No. 4 or 5 meeting the requirements of State of California, Department of Transportation, Standard Specifications Section 90- 90-1.03B(3)(b)of the latest edition of the State of California Standard Specifications.

HOT MIX ASPHALT (HMA) REPLACEMENT:
This work shall conform to Section 39, HOT MIX ASPHALT, Section 92, ASPHALTS, and Section 94, ASPHALTIC EMULSIONS of the State of California, Department of Transportation, Standard Specifications latest edition, with the exceptions noted in these Provisions. The HMA shall be ½" Type A with BG 64-10,

The work shall include sawcutting and/or grinding of asphalt, removal of asphalt and affected subgrade and replacement of asphalt as specified in these Provisions and as directed by the Engineer.

Prior to starting work, the Contractor shall submit Job Mix Formula on CEM 3511 and 3512 forms. A CEM 3513 is not required.

CERTIFICATES OF COMPLIANCE:
Contractor shall furnish to the Engineer a Certificate of Compliance signed by the manufacturer of the plant mix portland cement concrete and Hot Mix Asphalt. Certificate of Compliance shall state that the portland cement concrete and asphaltic cement concrete furnished complies in all respects with the requirements of the specifications. A Certificate of Compliance shall be furnished with each lot of material delivered to the work and the lot so certified shall be clearly identified in the Certificate.

1.03 TRAFFIC CONTROL AND PEDESTRIAN SAFETY

The Contractor shall provide traffic control in the form of placing warning signs, markers

and devices in accordance with the California MUTCD (latest edition) and as required by the Engineer. When necessary to provide for public safety or convenience, either for vehicles, pedestrians or bicyclist, the Contractor shall provide flaggers as necessary.
During non-work hours, the Contractor shall post signs and warning devices to safely direct pedestrians and bicyclist around the work area.

Contractor shall not unnecessarily interfere with use of any roadway, walkway or other facility for vehicular or pedestrian traffic. Before beginning any interference and only with City's prior concurrence, Contractor may provide detour or temporary bridge for traffic to pass around or over the interference, which Contractor shall maintain in satisfactory condition as long as interference continues. Unless otherwise provided in the Contract Documents, Contractor shall bear the cost of these temporary facilities.

1.034 CONSTRUCTION METHODS

SUBGRADE PREPARATION: (Portland Cement Concrete & Asphaltic Concrete)
The existing material shall be excavated to the required depth per the City of Cupertino Standard Details or Caltrans Standard Plans (latest eddition), as is applicable. The finished subgrade immediately prior to placing subsequent material thereon shall have a relative compaction of ninety (90%) percent for a depth of 0.5 foot as determined by State of California Test Method No. 216. The subgrade shall be smooth and true to the required grade. Immediately prior to the placing of cushion for portland cement concrete, the subgrade shall be thoroughly saturated with water. Ponded water shall not be permitted.

CUSHION:
The base material underlying existing sidewalk, curb and gutter or other portland cement concrete improvements is considered acceptable for this work. The Contractor will be required to bring the material to the proper grade and to consolidate by watering. The project engineer will determine when the required moisture content has been obtained. If additional cushion material is required due to grade changes, base material uncontaminated by native soil from other locations or ¾" Class 2 aggregate base may be used.

FORMS:
Forms shall be smooth on the side placed next to the portland cement concrete, and shall have a true smooth upper edge and shall be sufficiently rigid to withstand the pressure and tamping of fresh portland cement concrete without distortion. Timber forms shall be free from warping of deformation.

All forms shall be thoroughly cleaned and coated with form oil to prevent the portland cement concrete from adhering to them.

The depth of forms for back of curbs shall be equal to the full depth of the curb. The depth of face forms for portland cement concrete curbs shall be equal to the full face height of the curb. The gap between the bottom of the form and the subgrade shall not exceed 1 inch. Forms shall be set carefully to alignment and grade and shall be held rigidly in place by stakes, spreaders, or clamps, and shall be braced so that no displacement will occur during the working of the portland cement concrete. For other than short radius curves, timber

forms shall be nominal two (2”) inch stock.

All concrete placement shall be confined and no neat (earth confined) placement shall be allowed. When allowed by the engineer, concrete may be placed neatly against asphaltic concrete.

PLACEMENT:
All portland cement concrete shall be used while fresh and before it has taken an initial set. Retempering any partially hardened portland cement concrete with additional water shall not be permitted.

Where pavement or surfacing is to be placed around or adjacent to manholes, drop inlets, or catch basins, which will be located within traffic lanes, such structures shall not be constructed to final grade until after the pavement or surfacing has been placed around these locations.

Portland cement concrete shall be poured continuously between joints and brought to the required section as the work progresses.

JOINTS (CURB AND GUTTER):
Expansion joints shall be installed at each side of structures and at the ends of curb returns. Weakened plan joins shall be constructed at ten (10’) foot maximum intervals. Weakened plane joints shall be cut to a minimum depth of one and one-fourth (1-1/4”) inch with a tool that leaves corners rounded and insures a free movement of the portland cement concrete at the joint. The joint shall have a minimum width of one-eighth ($1/8^{th}$) inch and shall not exceed one-fourth (1/4”) inch.

JOINTS (SIDEWALK):
Expansion joints shall be constructed at all returns and opposite expansion joints in adjacent curb. Where curb is not adjacent, expansion joints shall be constructed at intervals of sixty (60’) foot maximum intervals and opposite weakened plane joints in adjacent curb. Joints shall be constructed at right angle to the line of curb and to the same depth and width as for curb and gutter.

Score lines shall be constructed at five (5’) foot intervals at right angle to the line of curb. For sidewalk eight (8’) feet or over in width, a score line parallel to the line of curb shall be constructed midway between back of curb and back of walk.

Score line shall be made with a scoring tool which will make a rounded line of uniform width and depth of one-fourth (1/4”) inch. A score line parallel to the face of curb shall be constructed six (6”) inches from the face of the curb.

TOLERANCE:
The top and face of the curb and gutter, the flowline of the curb and gutter, and the surface of the sidewalk shall not vary more than one-fourth (1/4”) inch for the edge of an eight (8’) foot straight edge when placed against the surface, except at grade changes or curves.

FINISH:

Fresh portland cement concrete shall be struck off and compacted until a layer of mortar has been brought to the surface. The surface shall be finished to grade and cross section with a float, troweled smooth, and finished with a broom. The finish and texture of the portland cement concrete shall be approved by the Engineer. Portland cement concrete adjacent to expansion joins shall be finished with an edger tool. Brooming shall be transverse to the line of traffic.

HMA PLACEMENT:
All asphalt replacement area finish surfaces must be smooth, uniform and match existing grades. Application of asphalt and asphaltic emulsion must be neat, with surrounding areas kept clean. Asphalt replacement thickness shall be 6 inches. The HMA shall be placed in two lifts with the top lift no less than 1-3/4 inches thick. The HMA shall be placed using the Method Specification for compaction as amended in writing by the Engineer prior to the work. Any broken edges of existing pavement shall be sawcut immediately prior to paving. Tack coat shall be placed on the vertical edges of both the existing HMA and concrete prior to the base course paving and again prior to the paving of the surface course.

1.05 TREE ROOTS & TREE DAMAGE

Contractor shall notify the Engineer of any roots discovered which are larger than two inches in diameter. Where work occurs adjacent to or over tree roots, the roots shall be removed to a depth of a minimum of at least six inches (6") below the bottom or side of the new portland cement concrete. Root removal shall be achieved by use of a Vermeer root cutter or approved equal. Tree root removal may occasionally be done by sawing or chopping with a sharp ax on an individual case basis, but only with the express approval of the Engineer and the Tree / Right of Way Supervisor (Jonathan Ferrante 408.777.3343). Cuts on tree roots and barks or skins or cuts on trees shall be treated with an acceptable sealer and growth inhibitor such as Tre-hold. Payment for this work shall be considered as included in the price for removal and replacement.

1.06 REMOVAL OF PARK STRIP IMPROVEMENTS

At some curb ramp locations, it will be necessary to remove existing concrete improvements made by property owners in the public right of way. If such removals are necessary, the limit of removal shall be sawcut to full depth of the existing concrete. After removal and construction of the new concrete facilities, the remaining area shall be backfilled with topsoil approved by the Engineer.

1.07 ROOT BARRIER

Linear root barriers shall be used when concrete hardscape is placed within six feet (6’) of any tree in any direction. Twelve inch root barriers shall be used when tree is located adjacent to new flat work. Eighteen inch root barriers shall be used when tree is located adjacenet to new curb and gutter. All root barriers shall shal be made of high density high impact plastic, shall have a minimum thickness of 0.085” and shall be installed according to manufacturer’s specifications. No root larger than 2’ in diameter shall be removed without expressed permission from the City Engineer.

1.08 EXISTING IMPROVEMENTS

Where irrigation systems, landscaping, fences, mailboxes, signs, and other improvements exist adjacent to the work, the Contractor shall use reasonable caution to ensure that no damage is caused. If damage to these improvements does occur, the Contractor shall replace in kind or with an acceptable substitute, at his expense.

When repairs to sidewalks and driveways adjacent to property line occur, there may be instances where on-site flat work (driveways and walkways) on private property will:

1. Interfere with the repair of existing public improvements.

2. Be incompatible with the new sidewalk, curb and gutter grades.

3. Be out of repair to the extent that the hardscape is hazardous to pedestrian traffic.

4. Present a restriction to the street tree's natural growing space.

In these situations, it may become necessary for the City's Contractor to remove and replace portions of the on-site flat work. The costs for the removal and replacement of private portland cement concrete improvements will be paid at contract unit prices. The costs for removal and replacement of private improvements other than portland cement concrete and/or asphalt will be negotiated on a case by case basis with the Engineer. On-site removal and replacement will be only as directed by the Engineer and no extension of quantities will be allowed without prior approval.

For decorative hardscape and landscape areas (parkstrip portland cement concrete, mow strips, etc.) the cost for the replacement of voluntary and private improvements within the public right-of-way shall remain the sole responsibility of the abutting property owner. In no instance shall the replaced hardscape be within three (3) feet of the base of any street tree, or in any way present a restriction to the natural growth of the street tree, or interfere with any public utility within the parkstrip. All such work shall require a permit from the City of Cupertino separate from this project.

1.09 CLEANUP AND BACKFILLING

The construction area shall be kept neat and safe. Forms shall be removed from the edge of portland cement concrete within two (2) days and be kept in neat piles, not scattered about, and nails in boards shall be turned under, bent over, or removed. Removed nails shall be cleaned up and removed from site.

After forms are removed, portland cement concrete edges shall be backfilled and raked smooth with clean and suitable topsoil. Said topsoil material shall also be used to backfill and bring to an acceptable grade area where portland cement concrete or other paving material is removed, but not replaced.

The Contractor shall clean all areas occupied by him in connection with the work, and the entire area shall be left in a neat, clean and presentable condition, within seven days of completion. **All asphalt replacement shall be completed, brought to finish grade with**

asphaltic concrete within thirty (30) calendar days of removal. Upon removal of forms, all edges of concrete are to be backfilled. When the edge is lip of gutter, backfill material will be compacted class II aggregate base or asphalt concrete. Any residue left from said cutting operations shall be cleaned and removed per the nonpoint source pollution control best management practices. All cleanup shall be performed as required by the Engineer.

1.010 WORK AREAS

The Engineer, whenever possible, will arrange the work so that all of the work required to be done in a section of the City will be scheduled continuously. The intent of the scheduling will be to prevent the Contractor from having to unnecessarily move from one part of the City to another without having completed the work first assigned.

Because there will be situations where it will be necessary to do work in locations separated from other work areas by a considerable distance, two (2) categories have been established in the Bid Schedule based on the volume of the pour. These categories are:

A - Over one (1) to six (6) cubic yards of portland cement concrete.
B - Over six (6) cubic yards of portland cement concrete.

For the purposes of determining which category applies, a distance of 1000 feet has been established. If a placement is to be made more than 1000 feet from a pour to be done at or near the same time, the volume of the remote pour would be calculated. Based on that calculation, Category A or B would apply. Category C work items are miscellaneous and independent of volume and location. The Engineer will determine which category applies.

The majority of work items will occur on various residential streets throughout the City with parking on either side of the street and a 25 miles per hour speed limit. All other work will occur on arterial / collector streets. These streets include, but are not limited to:

- Stelling Rd between Stevens Creek Blvd and SR-85.

1.011PAYMENT:

Payment shall be per unit specified and shall be considered full compensation for furnishing all materials, equipment, labor, safety, traffic controls, cleanup and all work incidental thereto.

Bid items A.1 through 4, B.1 through 4, shall include: sawcutting, removal and replacement of existing concrete; dowling, removal of street pavement as necessary; replacement or repair of existing improvements; grading, filling and consolidating of base materials; tree and root pruning; and backfill and cleanup. Contractor is advised to closely review City of Cupertino Standard Details 1-16, 1-18 through 1-30.

Bid Item C.1 – Removal of Park Strip Improvements: This work includes breaking up, loading, hauling and disposing of portland cement concrete, asphalt, brick or other materials

in areas such as park strips where new portland cement concrete is not to be installed. This work shall also include backfilling and smoothing out topsoil to a plane even with top-of-curb and top-of-sidewalk.

Bid Item C.2 – Remove Median Island Flatwork: This work includes breaking up, loading, hauling and disposing of portland cement concrete, asphalt, brick or other materials in median island areas located within median islands located on collector / arterial streets. This work shall also include backfilling and smoothing out topsoil to a plane even with top-of-curb.

Bid Item C.3 - Valley Gutter: This work shall include the removal of existing valley gutter, removal of street pavement if necessary, grading, filling and compaction of both sub-base and base material if necessary and construction of new valley gutter. Portland cement concrete shall be as specified above and shall include #4 rebar per City Standard Detail 1-18.

Bid Item C.4A – C.4G – Depressed Curb Ramps: This work shall include sawcut and removal of existing improvements, the construction of sub-grade, placement of cushion material and construction of new handicap ramp at various locations per Caltrans Standard Detail A88A (latest addition) and in conformance with ADA requirements. The Engineer shall determine the type of ramp to be installed at each location. Work shall include all improvements within grooved boarders as shown on detail A88A, assuming planter width ranging 4.5’ to 5.0’. Payment shall be on per each basis. Depressed curb ramps shall be poured monolithically with adjacent curb and gutter, retaining curbs, etc. All improvements outside of grooved borders including sidewalk, curb and gutter, and retaining curbs (case type B, C, and E) shall be paid at unit cost. Hardscape in planter strip adjacent to curb ramps shall be removed to limits specified by engineer prior to installation of ramp, and shall be paid per bid item C.1. The detectable warning surface shall be federal yellow or dark gray, as specified by the Engineer.

Bid Item C.5 – Upgrade Existing Curb Ramp: This work will modify existing ramps to comply Caltrans Standard Detail A88A (latest addition). Work shall include installation of detectable warning surfaces. Contractor shall verify existing ramps meet all ADA requirements, other than presence of detectable warning surface, prior to installation. The detectable warning surface shall extend the full width and depth of the ramp and shall be located 6” to 8” from the gutter flowline. The detectable warning surface shall be federal yellow or dark gray, as specified by the City Engineer, surface applied composite tactile by ADA solutions, Inc. or approved equal. When the detectable warning surface edge is cut and the resulting edge is not flush with the surface of the ramp, the edge shall be beveled or conformed with perimeter sealant at 1:2 max slope in accordance with the manufactures requirements. Color Matched structural adhesive shall be Urethane Elastomeric Adhesive by Bostik or approved equal. Structural adhesive shall be applied to full perimeter and through center of tile each way per manufactures requirements. Color matched, stainless steel 304, flat head drive anchors (1/4” diameter x 1 ½” long) shall be placed twelve inch on center both directions. Manufacturer(s) shall provide a written 5-year warranty for prefabricated detectable warning surfaces, guaranteeing replacement when there is a defect in the dome shape, color fastness, sound-on-cane acoustic quality, resilience, or attachment. Warranty period shall begin upon acceptance of work.

Bid Item C.6 – Curb Ramp Retaining Curb (outside grooved border): Payment shall be made per linear foot of retaining curb installed. Payment shall include full compensation for furnishing all labor, materials, tools, equipment, and incidentals.

Bid Item C.7 - Root Barriers: Payment shall be made per linear foot of root barrier installation. Payment shall include excavating the required trench, and the furnishing of all labor, materials, tools, and equipment required to root prune, apply dressing, and install root barrier complete and in place. All root barriers will be 12-inches deep, minimum.

Bid Item C.8 - Median Island Curb: Payment shall include removal of existing improvements; removal of street pavement if necessary; grading, filling and consolidating of base materials. This work shall also include backfilling and replacement of topsoils in landscape median islands; protection in place or replacement of existing irrigation facilities (reconfiguration or modification of irrigation facilities if needed will be done by others); contractor shall supply traffic control and advance warning devices for lane closures.

Payment shall be measured and paid per linear foot for median island curbs per City Standard Detail A1-8. Payment shall include full compensation for furnishing all labor, materials, tools, equipment, and incidentals, and for returning serviceable existing segmented curbs to the City or disposing of non-serviceable existing curbs. Locations of median islands improvements shall be determined by the Engineer. Payment shall include full compensation for furnishing all labor, materials (including sand cushion), tools, equipment, and incidentals.

City will be responsible for relocation of any traffic control post/signs that may be located within median islands.

Bid Item C.9 - Reconstruction of Catch Basin Top: Payment shall be made for the removal and replacement of existing catch basin top per City Standard Detail 3-3; existing hood, frame and grate shall be salvaged and reused; replacement of existing rebar shall be included in the Bid Item.

Bid Item C.10 – Asphalt Replacement: Payment shall be measured and paid per the theoretical weight, measured in tons. The theoretical weight will be calculated based upon the individual asphalt replacement areas marked by the City, multiplied by the depth, multiplied by the weight of asphalt in lb/cubic feet (assume 148 lbs/cubic foot), all divided by 2000. Payment shall include full compensation for furnishing all labor, materials, tools, equipment, and incidentals, and for doing all the work involved in constructing the asphalt repairs, complete in-place, sawcutting, removal of asphalt/baserock/earth spoils, including any and all additional work described in these project specifications and plans. Any and all removal and replacement done outside of the areas marked by the City or to depths greater than the required 6 inches.

Contractor is required to coordinate construction with Kane Wolfe, Maintenance Worker II (408) 777-3353 a minimum of 48 hours in advance.

Payment shall be made for only those items shown on the bid schedule. Any item of work that is not shown on bid schedule, but is required by these specifications shall be considered as incidental and full compensation for same shall be made as considered included in the

payment for the bid items.

In general, contract prices and payments shall include, but not be limited to, full compensation for all necessary materials, labor, tools, equipment, traffic control, and incidentals to do all the work involved, complete and in place, as shown on the plans, as specified in the specifications and as directed by the Engineer.

LIST OF DETAILS

Detail No.	Title
1-16	STANDARD CURB SECTIONS
1-18	STANDARD VALLEY GUTTER
1-19	SIDEWALKS DETAILS
1-20	DRIVEWAY DETAIL – DETACHED SIDEWALK
1-21	DRIVEWAY DETAIL – MONOLITHIC SIDEWALK
1-23	DOWEL CONNECTIONS
3-2	STANDARD DROP INLET – CURB OPENING
A88A	CALTRANS REVISED STANDARD PLAN – CURB RAMP DETAILS

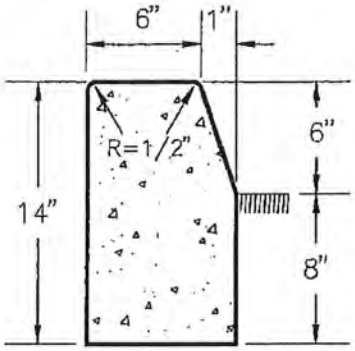

A1-6

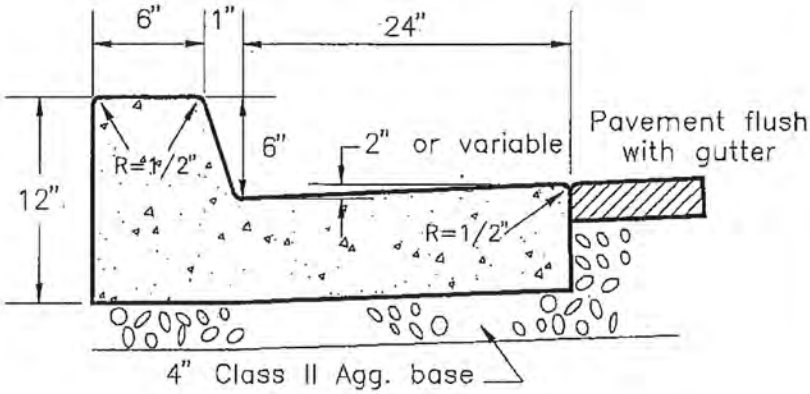

A2-6

NOTE: When pedestrian path of travel crosses curb, gutter pan slope shall not exceed 5%/

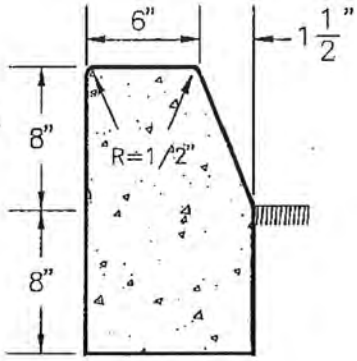

A1-8

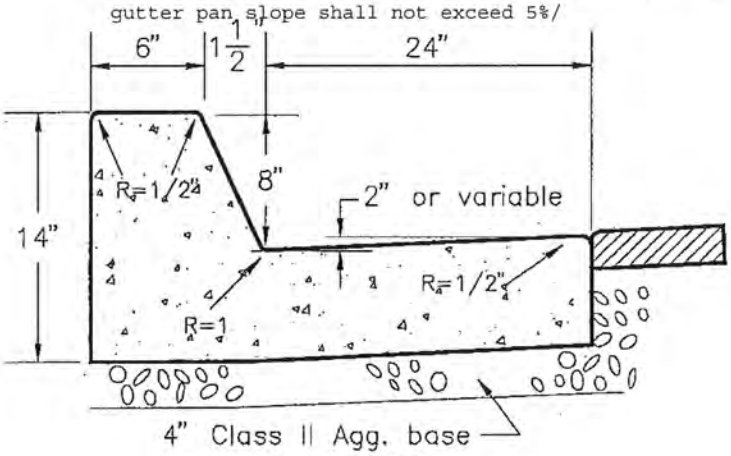

A2-8

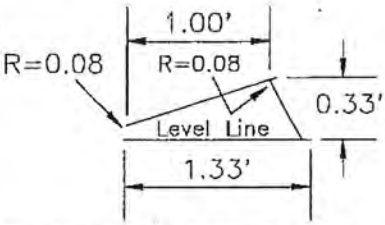

TYPE E (MOUNTABLE DIKE)

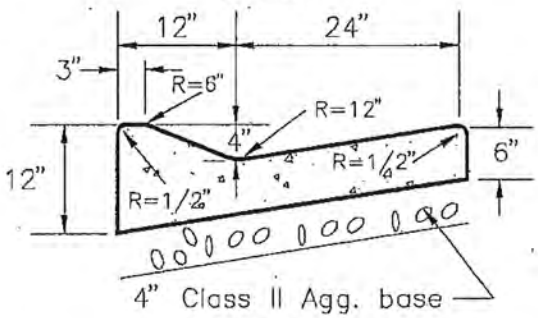

TYPE E

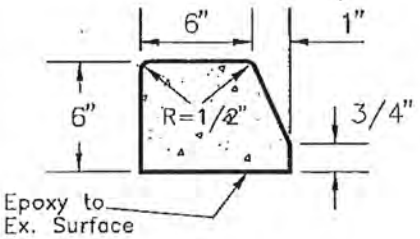

EXTRUDED CURB

A3-6

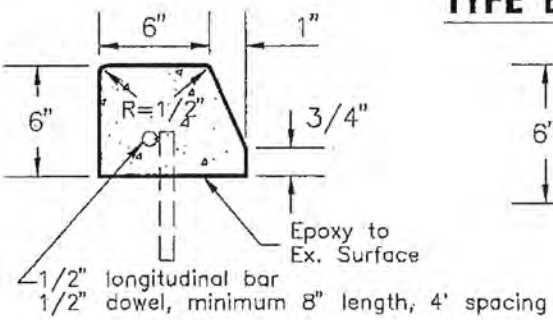

A3-6R

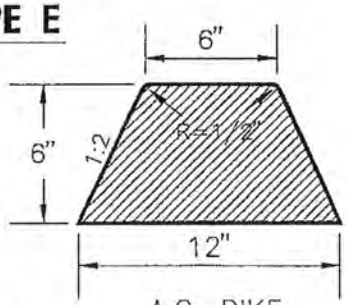

A3-6D

STANDARD CURB SECTIONS

REVISED 3/97

CITY OF CUPERTINO STANDARD DETAILS	APPROVED BY: CITY ENGINEER DATE: 5/1/97	1–16

NOTE: When pedestrian path of travel crosses curb, gutter pan slope shall not exceed 5%.

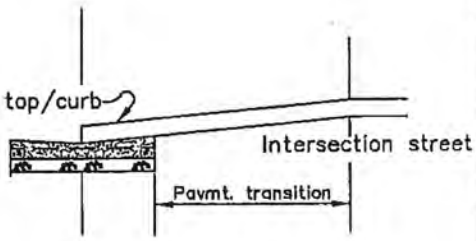

SECTION B–B

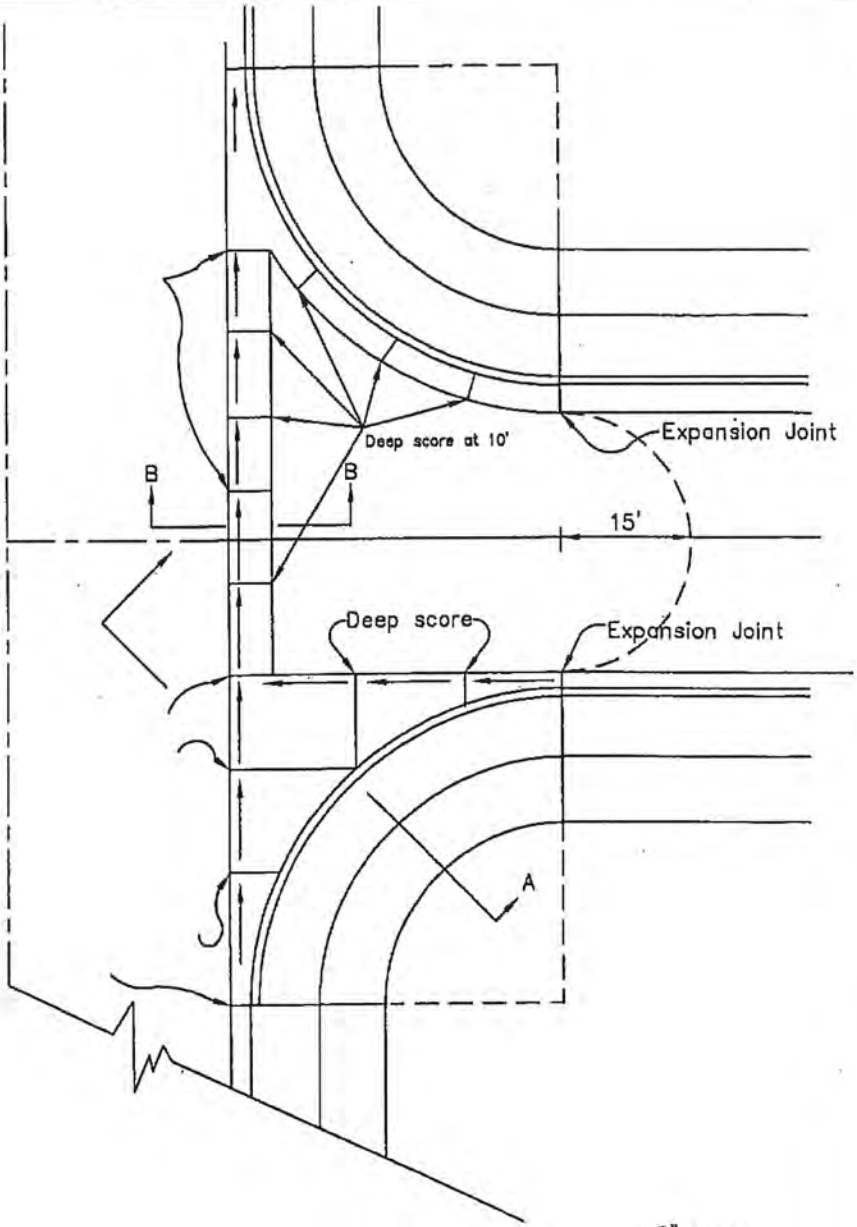

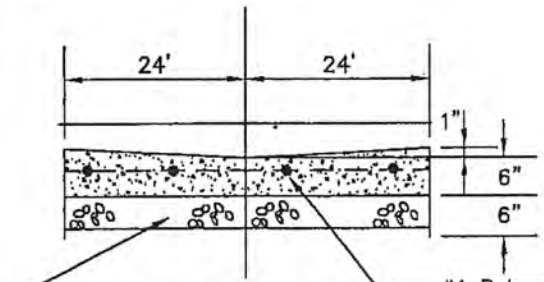

TYPICAL SECTION

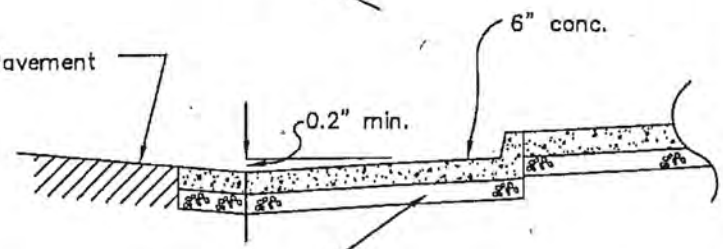

SECTION A–A

STANDARD VALLEY GUTTER

Revised 6/09

CITY OF CUPERTINO STANDARD DETAILS	APPROVED BY: CITY ENGINEER	DATE: 6.10.09	1–18

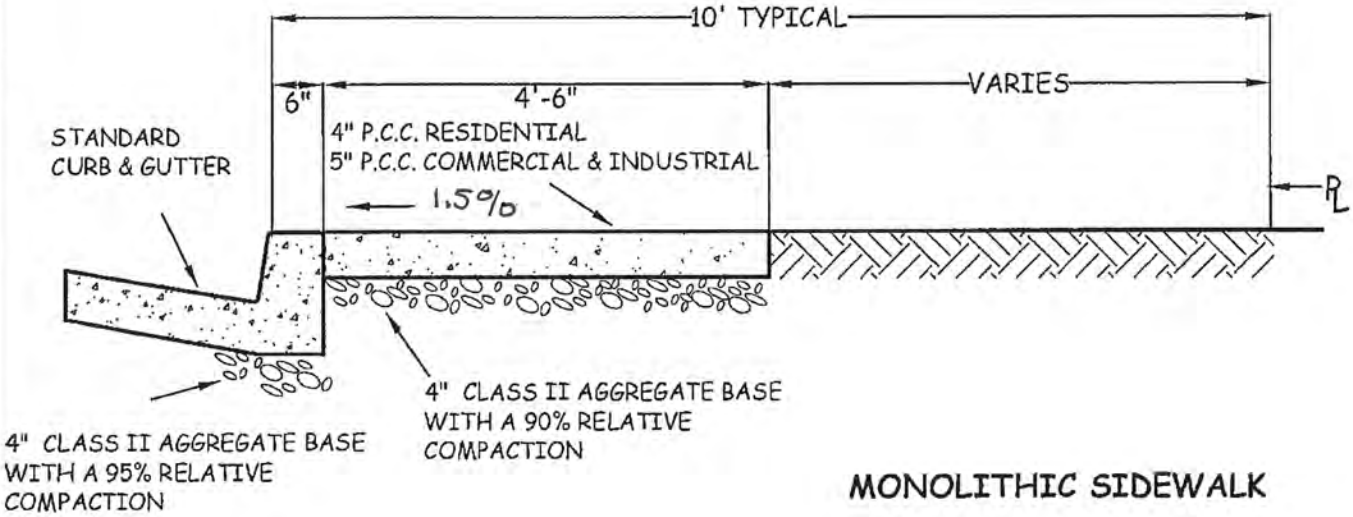

MONOLITHIC SIDEWALK

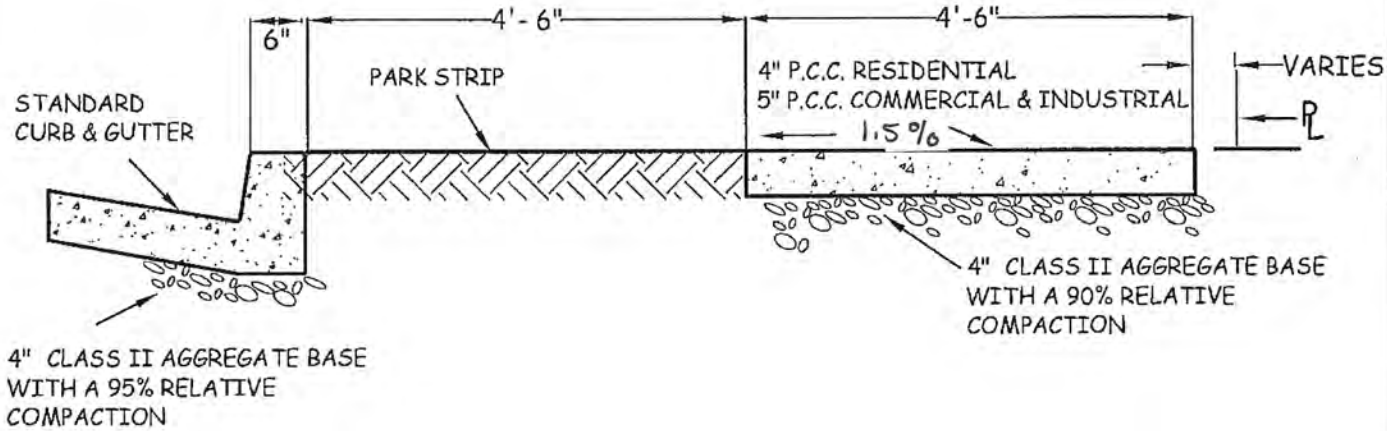

DETACHED SIDEWALK

NOTES:

1. Driveway concrete thickness: Residential - 4". Commercial and Industrial - 5" w/ #4 rebar 18" O.C. both ways.
2. One pound of dispersing black shall be mixed with each cubic yard of concrete at the batch plant.
3. Sidewalks, curbs and gutters shall be Class "A" (6 sacks per cubic yard) as per Standard Specification and shall attain a strength 3,000 p.s.i. in 28 days.
4. Sidewalk finish shall be light broom.

SIDEWALK DETAILS

REVISED 7/2013

CITY OF CUPERTINO STANDARD DETAILS	APPROVED BY: City Engineer DATE: 7/19/13	1-19

TABLE "A"

Residential	Single	Double
Single Family Multiple	16' 18'	22' 24'
	One way	Two Way
Commercial	min 20' max 32'	min 32' max 44'
Industrial	min 24' max 36'	min 36' max 48'

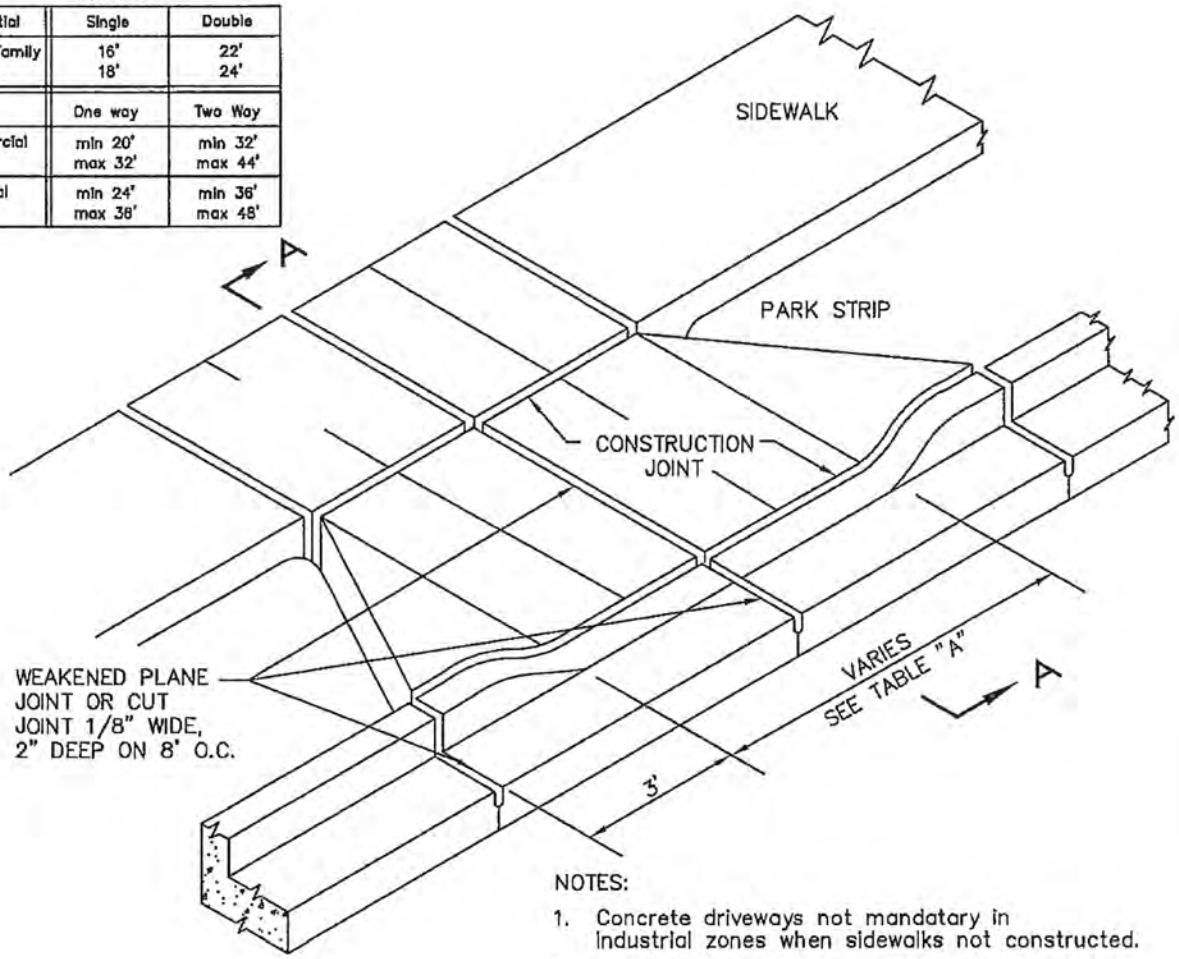

NOTES:

1. Concrete driveways not mandatory in industrial zones when sidewalks not constructed.
2. Score marks not to exceed 4'–0" O.C. Use mechanical separator at every other score mark.
3. Finish to be light broom.
4. Sidewalk to be replaced when new driveway is placed.
5. Edge of driveway shall be a minimum of 4' from property line.

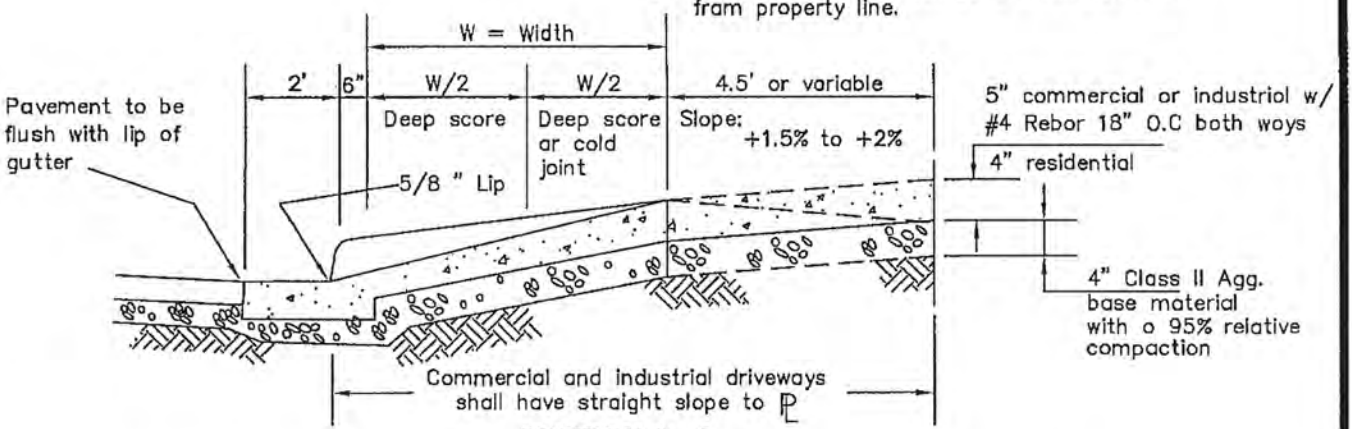

SECTION A - A

DRIVEWAY DETAIL - DETACHED SIDEWALK

REVISED 7/2013

CITY OF CUPERTINO STANDARD DETAILS	APPROVED BY: CITY ENGINEER	DATE: 7/19/13	1–20

TABLE "A"

Residential	Single	Double
Single Family Multiple	16' 18'	22' 24'
	One way	Two Way
Commercial	min 20' max 32'	min 32' max 44'
Industrial	min 24' max 36'	min 36' max 48'

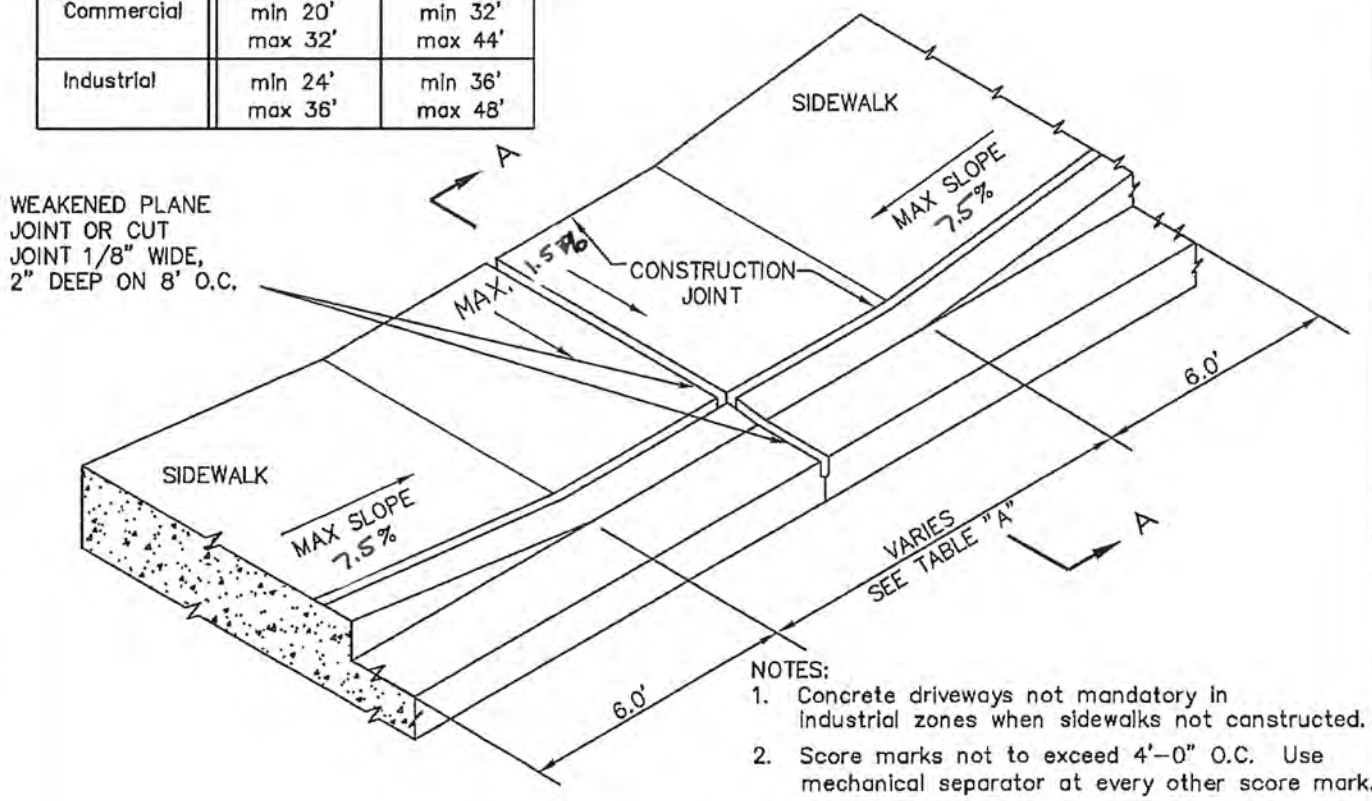

NOTES:

1. Concrete driveways not mandatory in industrial zones when sidewalks not constructed.
2. Score marks not to exceed 4'–0" O.C. Use mechanical separator at every other score mark.
3. Finish to be light broom
4. Sidewalk to be replaced when new drive-way is placed.
5. Edge of driveway shall be a minimum of 4' from property line.
6. If on-street parking is permitted, driveway shall be flush with gutter.

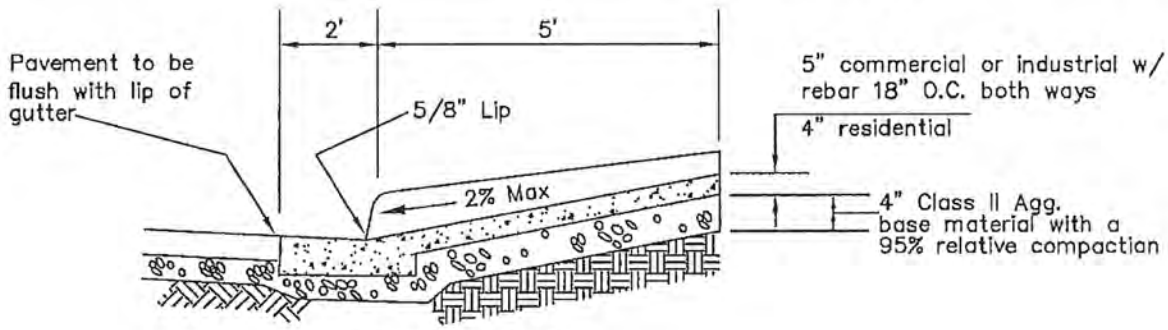

SECTION A - A

DRIVEWAY DETAIL - MONOLITHIC SIDEWALK

REVISED 7/2013

CITY OF CUPERTINO STANDARD DETAILS	APPROVED BY: CITY ENGINEER	DATE: 7/19/13	1–21

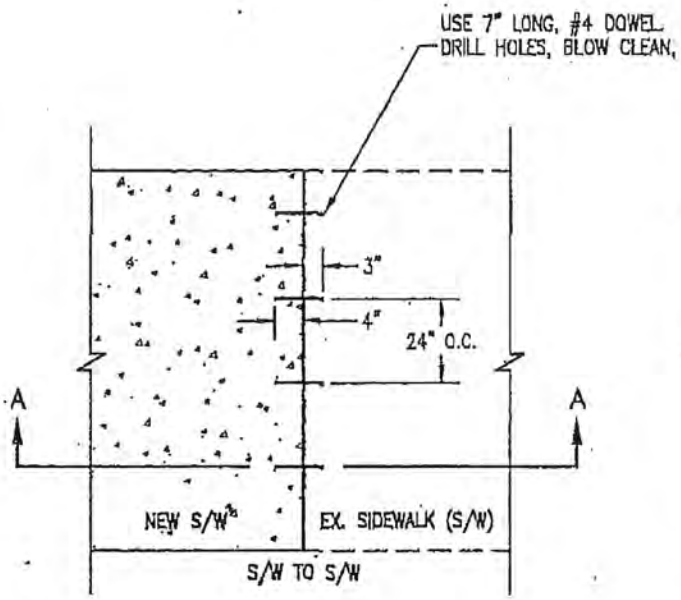

PLAN VIEW
NO SCALE

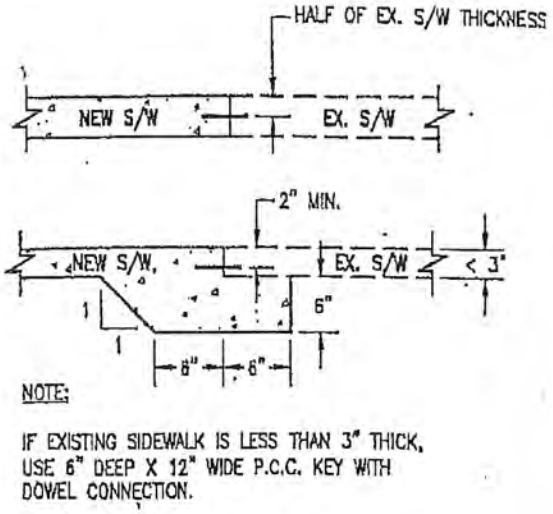

SECTION A–A
NO SCALE

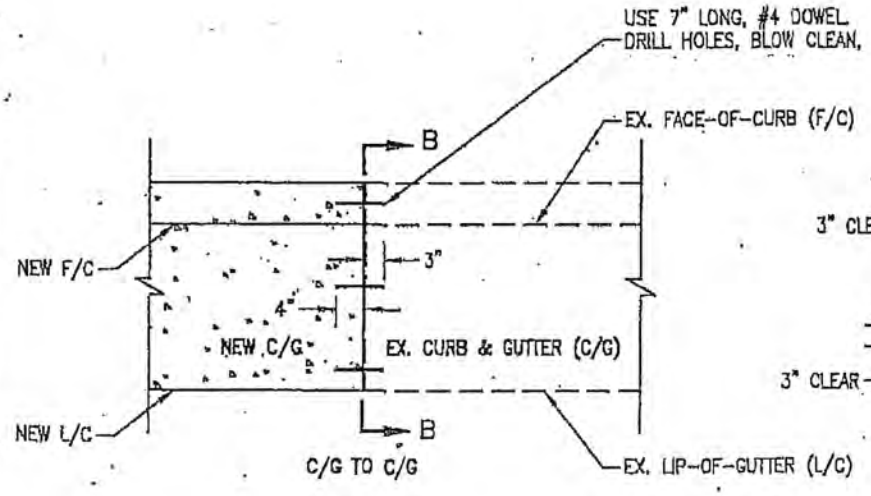

PLAN VIEW
NO SCALE

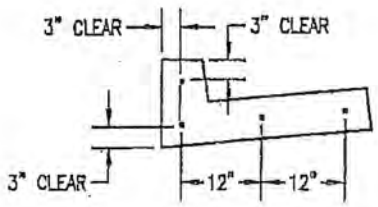

SECTION B–B
NO SCALE

DOWEL CONNECTIONS

June 2009

CITY OF CUPERTINO STANDARD DETAILS	APPROVED BY: [signature] CITY ENGINEER DATE: 6-10-09	1–23

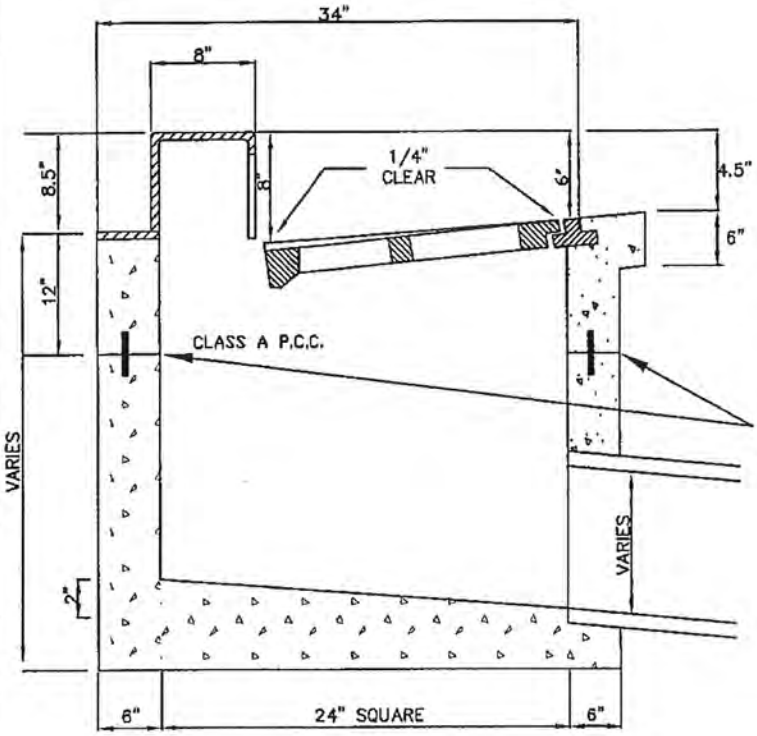

SECTION A-A Showing Concrete Box

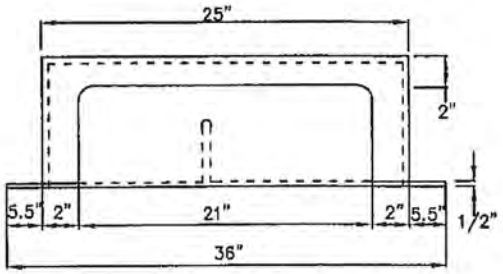

VIEW B-B

Note: Const. jt. permitted when catch basin top is reconstructed. Place #4 x 12" dowels at each const. jt. Drill holes, blow clean and set dowels in epoxy.

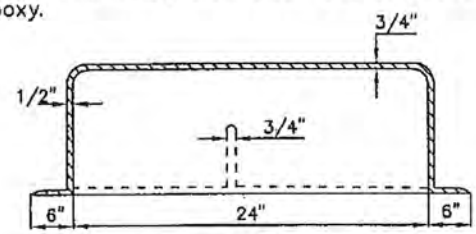

SECTION CURB CASTING

NOTE: Frame dimensions may vary with the approval of the City Engineer.

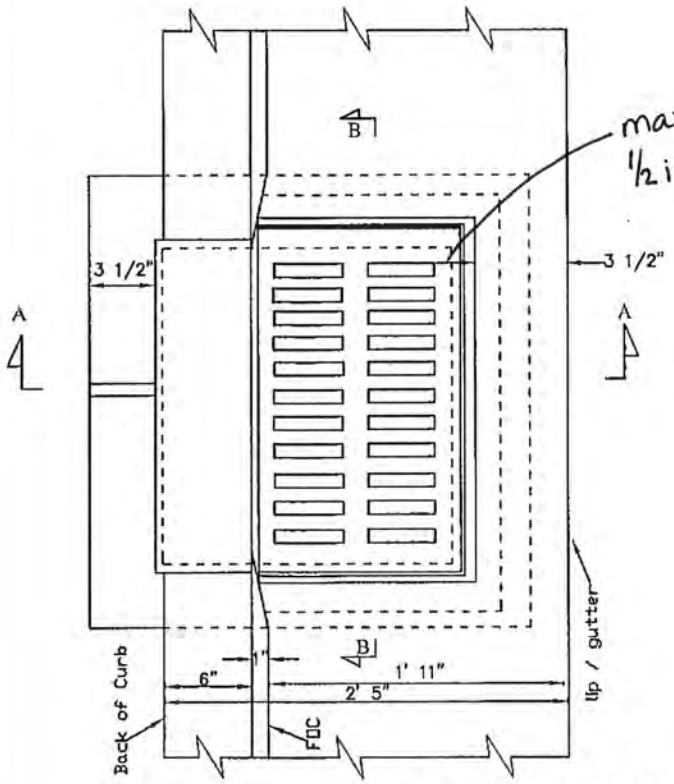

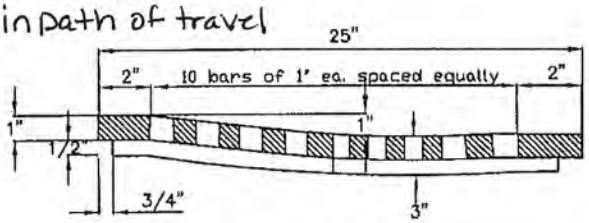

SECTION B-B

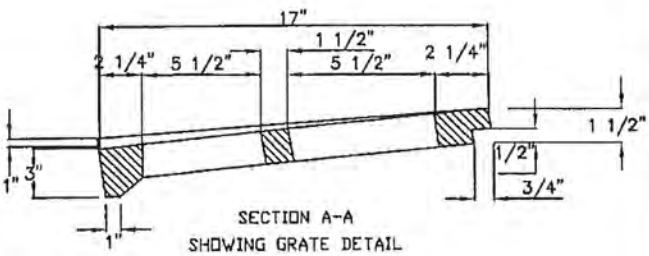

SECTION A-A
SHOWING GRATE DETAIL

STANDARD DROP INLET - CURB OPENING

CITY OF CUPERTINO STANDARD DETAILS	APPROVED BY: [signature] DATE: 6.10.07 City Engineer	3-2

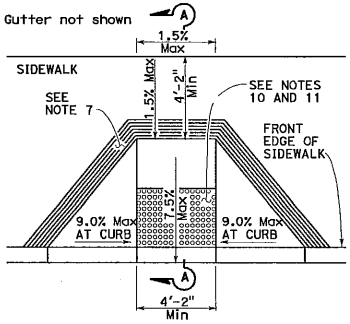

CASE A

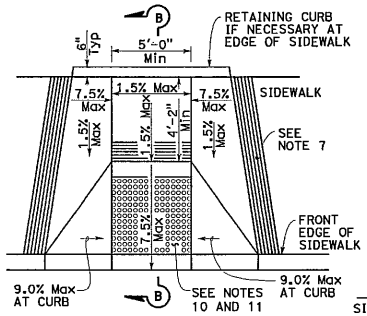

CASE B

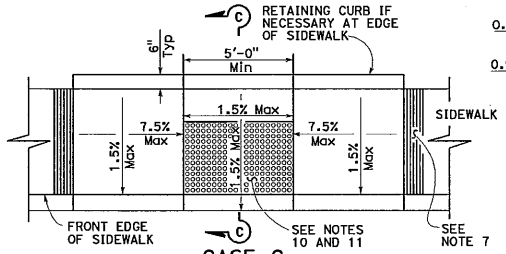

CASE C

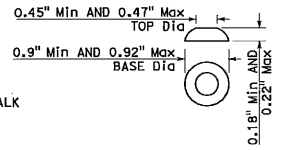

RAISED TRUNCATED DOME

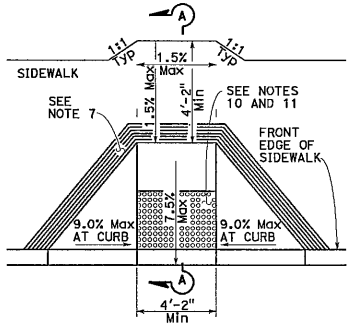

CASE D

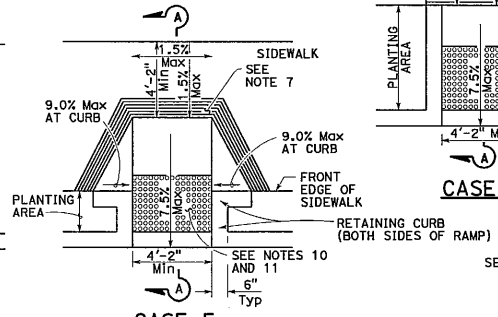

CASE E

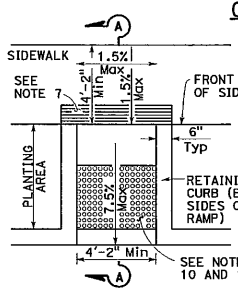

CASE F

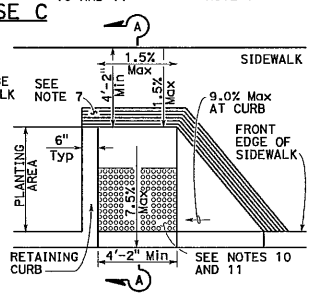

CASE G

See Note 4

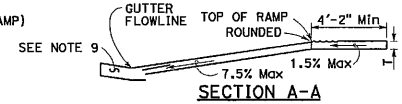

SECTION A-A

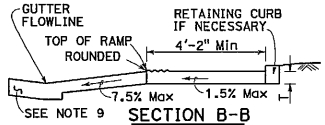

SECTION B-B

Depress entire sidewalk as required

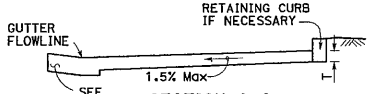

SECTION C-C

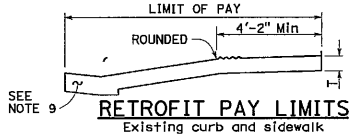

RETROFIT PAY LIMITS

Existing curb and sidewalk

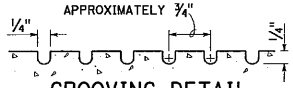

GROOVING DETAIL

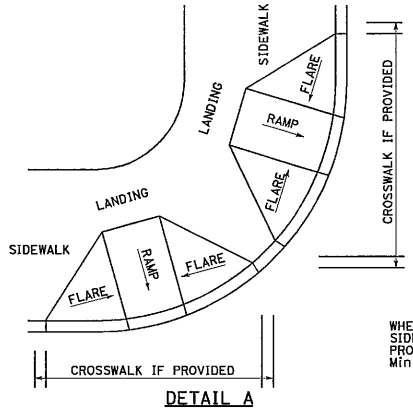

DETAIL A

TYPICAL TWO-RAMP CORNER INSTALLATION

See Note 1

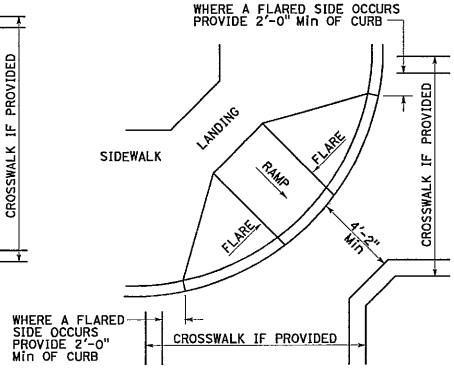

DETAIL B

TYPICAL ONE-RAMP CORNER INSTALLATION

See Notes 1 and 3

Dist	COUNTY	ROUTE	POST MILES TOTAL PROJECT	SHEET No.	TOTAL SHEETS

REGISTERED CIVIL ENGINEER

March 21, 2014

PLANS APPROVAL DATE

REGISTERED PROFESSIONAL ENGINEER Hector David Cardona No. C41957 Exp. 3-31-14 CIVIL STATE OF CALIFORNIA

THE STATE OF CALIFORNIA OR ITS OFFICERS OR AGENTS SHALL NOT BE RESPONSIBLE FOR THE ACCURACY OR COMPLETENESS OF SCANNED COPIES OF THIS PLAN SHEET.

TO ACCOMPANY PLANS DATED _____

NOTES:

1. As site conditions dictate, Case A through Case G curb ramps may be used for corner installations similar to those shown in Detail A and Detail B. The case of curb ramps used in Detail A do not have to be the same. Case A through Case G curb ramps also may be used at mid block locations, as site conditions dictate.
2. If distance from curb to back of sidewalk is too short to accommodate ramp and 4'-2" platform (landing) as shown in Case A, the sidewalk may be depressed longitudinally as in Case B, or C or may be widened as in Case D.
3. When ramp is located in center of curb return, crosswalk configuration must be similar to that shown for Detail B.
4. As site conditions dictate, the retaining curb side and the flared side of the Case G ramp shall be constructed in reversed position.
5. If located on a curve, the sides of the ramp need not be parallel, but the minimum width of the ramp shall be 4'-2".
6. Side slope of ramp flares vary uniformly from a maximum of 9.0% at curb to conform with longitudinal sidewalk slope adjacent to top of the ramp, except in Case C and Case F.
7. The curb ramp shall be outlined, as shown, with a 1'-0" wide border with 1/4" grooves approximately 3/4" on center. See grooving detail.
8. Transitions from ramps and landing to walks, gutters or streets shall be flush (no lip) and free of abrupt changes.
9. Counter slopes of adjoining gutters and road surfaces immediately adjacent to and within 24 inches of the curb ramp shall not be steeper than 1:20 (5.0%). Gutter pan slope shall not exceed 1" of depth for each 2'-0" of width.
10. Curb ramps shall have a detectable warning surface that extends the full width and 3'-0" depth of the ramp. A 4'-0" wide detectable warning surface may be used on a 4'-2" wide curb ramp. Detectable Warning Surfaces shall conform to the requirements in the Standard Specifications.
11. The edge of the detectable warning surface nearest the street shall be between 6" and 8" from the gutter flowline.
12. Sidewalk and ramp thickness, "T", shall be 3½" minimum.
13. Utility pull boxes, manholes, vaults and all other utility facilities within the boundaries of the curb ramp will be relocated or adjusted to grade by the owner prior to, or in conjunction with, curb ramp construction.
14. Detectable warning surface may have to be cut to allow removal of utility covers while maintaining full detectable warning width and depth.

RAISED TRUNCATED DOME PATTERN (IN-LINE)

DETECTABLE WARNING SURFACE

See Note 10

STATE OF CALIFORNIA
DEPARTMENT OF TRANSPORTATION

CURB RAMP DETAILS

NO SCALE

RSP A88A DATED MARCH 21, 2014 SUPERSEDES RSP A88A DATED JULY 19, 2013 AND STANDARD PLAN A88A DATED MAY 20, 2011 - PAGE 121 OF THE STANDARD PLANS BOOK DATED 2010.

REVISED STANDARD PLAN RSP A88A

2010 REVISED STANDARD PLAN RSP A88A

7-25-14

ATTCHMENT A - LIST OF PROEJCT STREETS NEAR SCHOOLS

2014 Sidewalk Accessibility Improvements

Project # 2014-15

STREET NAME	FROM	TO
AMULET PL	AMULET DR	END
BREWER AVE	MILFORD	DEXTER
CEDAR TREE CT	CEDAR TREE	END
CEDAR TREE LN	ORANGE TREE	BLANEY
CHISHOLM AVE	DEXTER	MILFORD
DRYDEN AVE	SHATTUCK	RUCKER
FARALLONE DR	JOHN	PACIFICA
LEAVESLEY PL	SHATTUCK	END
LINDA VISTA PL	LINDA VISTA	END
MANITA CT	RAINBOW	END
NATHANSON AVE	METEOR	END
ORANGE AVE	GRANADA	STEVENS CREEK
PASADENA AVE	GRANADA	STEVENS CREEK
RAINBOW DR	STELLING	BUBB
RAINBOW PL	RAINBOW	END
ROSARIO AVE	BUBB	MARIA ROSA
RUMFORD DR	ANSON	CASTINE
SHATTUCK DR	SANTA TERESA	DRYDEN
STAFFORD DR	SUNDERLAND	ELMSFORD
SUNDERLAND DR	YORKSHIRE	STAFFORD
TWILIGHT CT	BLANEY	END
WHITNEY WY	PACIFICA	CLAY