CITY OF CUPERTINO

SPORTS CENTER - WEST COURT RENOVATIONS AND IMPROVEMENTS

21111 STEVENS CREEK BOULEVARD

Project #2012-9151

VICINITY MAP

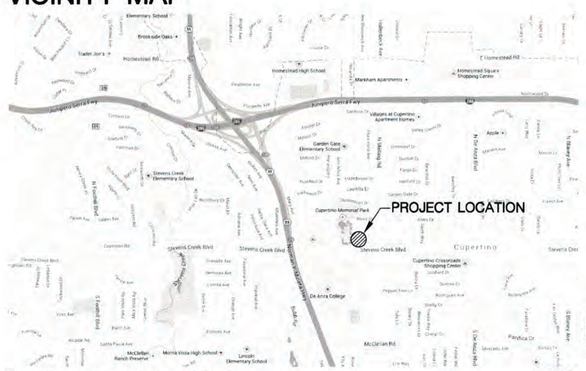

SOURCE: 2015 GOOGLE MAPS

N.T.S.

LOCATION MAP

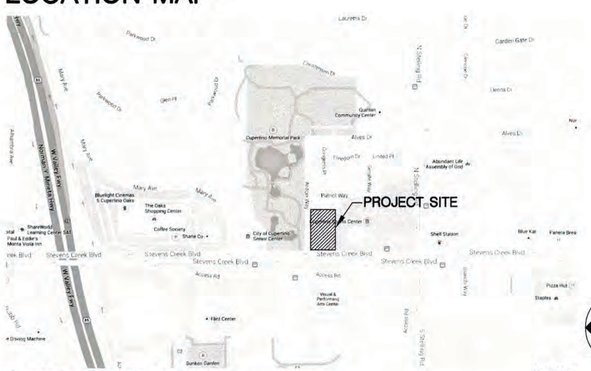

SOURCE: 2015 GOOGLE MAPS

N.T.S.

REGULATORY STANDARDS

PROJECT SHALL COMPLY WITH THE 2013 CALIFORNIA BUILDING CODE (BASE CODE 2012 IBC), 2013 CA PLUMBING (2012 UPC), 2013 CA MECHANICAL (2012 UMC), 2013 CA ELECTRICAL (2011 NEC), 2013 CA FIRE (2012 IFC), 2013 ENERGY CODE, CUPERTINO MUNICIPAL CODE, AMERICANS WITH DISABILITIES ACT TITLE II REGULATIONS, AND THE 2010 ADA STANDARDS FOR ACCESSIBLE DESIGN.

GENERAL NOTES

1. **COMPOSITE BASE SHEET:** THE PROPOSED IMPROVEMENTS SHOWN ON THESE DRAWINGS ARE SUPERIMPOSED ON A BASE SHEET. THIS BASE SHEET IS COMPILED FROM THE TOPOGRAPHIC SURVEY, OTHER ARCHITECTURAL AND/OR ENGINEERING DOCUMENTS, AND OTHER DATA AS MADE AVAILABLE TO THE LANDSCAPE ARCHITECT. THIS BASE SHEET INFORMATION IS SHOWN IN HALF TONE ON THE PLANS. THE LANDSCAPE ARCHITECT SHALL NOT BE HELD LIABLE FOR CHANGES, INACCURACIES, OMISSIONS, OR OTHER ERRORS ON THESE DOCUMENTS. THE COMPOSITE BASE SHEET IS PROVIDED AS AN AID ONLY AND THE CONTRACTOR SHALL BE RESPONSIBLE FOR REVIEWING THESE DOCUMENTS AND INCORPORATING/INTEGRATING ALL CONSTRUCTION AS REQUIRED TO ACCOMMODATE SAME.

   THE BASE SHEET SOURCE FOR THESE DRAWINGS IS:

   1. TOPOGRAPHIC SURVEY PLAN, 4003-TOPO, MacLEOD AND ASSOCIATES, 02/13/15, (650) 593-8580

   2. GRADING AND DRAINAGE PLAN, DE ANZA RACQUET CLUB, GEORGE S. NOLTE AND ASSOCIATES, 03/21/1975

2. **UTILITIES:** PRIOR TO CONSTRUCTION, THE CONTRACTOR IS RESPONSIBLE FOR CONTACTING THE UTILITY COMPANIES INVOLVED AND REQUESTING A VISUAL VERIFICATION OF THE LOCATIONS OF THEIR UNDERGROUND FACILITIES. MOST UTILITY COMPANIES ARE MEMBERS OF THE UNDERGROUND SERVICE ALERT (U.S.A.) ONE-CALL PROGRAM. THE CONTRACTOR OR ANY SUBCONTRACTOR FOR THIS CONTRACT SHALL NOTIFY MEMBERS OF THE U.S.A. 2 WORKING DAYS IN ADVANCE OF PERFORMING EXCAVATION WORK BY CALLING THE TOLL-FREE NUMBER (800) 642-2444. EXCAVATION IS DEFINED AS BEING 18 OR MORE INCHES IN DEPTH BELOW THE EXISTING SURFACE.

   THE CONTRACTOR IS CAUTIONED THAT ONLY EXCAVATION WILL REVEAL THE TYPES, EXTENT, SIZES, LOCATION, AND DEPTHS OF SUCH UNDERGROUND UTILITIES. HOWEVER, THE CONSULTANT CAN ASSUME NO RESPONSIBILITY FOR THE COMPLETENESS OR ACCURACY OF ITS DELINEATION OF SUCH UNDERGROUND UTILITIES, NOR FOR THE EXISTENCE OF OTHER BURIED OBJECTS OR UTILITIES WHICH ARE NOT SHOWN ON THESE DRAWINGS.

SCOPE OF WORK

CONSTRUCTION OF NEW MULTI-USE SPORT COURT AND RE-SURFACING OF FIVE EXISTING TENNIS COURTS INCLUDING FENCING, LIGHTING, BALL WALL, TENNIS NET POSTS, BASKETBALL STANDARDS AND WALL FASCIA CONSTRUCTION AND OTHER MISCELLANEOUS IMPROVEMENTS.

REVIEWED BY:

KATY JENSEN
CAPITAL IMPROVEMENT
PROGRAM MANAGER

DATE: 6·8·2015

APPROVED BY:

TIMM BORDEN,
RLE #45512
DIRECTOR OF PUBLIC WORKS

DATE: 6·9·15

SHEET SCHEDULE

SHEET #	SHEET TITLE
L-1	COVER SHEET
L-2	EXISTING CONDITIONS PLAN
L-3	EROSION CONTROL PLAN
L-4	BEST MANAGEMENT PRACTICES
L-5	DEMOLITION PLAN
L-6	GRADING AND DRAINAGE PLAN
L-7	SITE CONSTRUCTION PLAN
L-8 - L-11	CONSTRUCTION DETAILS
L-12	ENLARGEMENT PLAN
S1	STRUCTURAL NOTES AND SPECIAL INSPECTION
S2	WALL FACING ELEVATION AND DETAILS
S3	SPORT COURT PLAN SECTIONS AND DETAILS
E-1	LEGEND, SINGLE LINE DIAGRAM AND LIGHTING CONTROL DIAGRAMS
E-2	ELECTRICAL DETAILS
E-3	SITE ELECTRICAL PLAN

PROJECT DIRECTORY

CITY OF CUPERTINO
BRUCE BIORDI
PROJECT MANAGEMENT CONSULTANT
10300 TORRE AVE.
CUPERTINO, CA 95014
(408) 480-4370

GEOTECHNICAL ENGINEER
GEOFORENSICS INC.
561 PILGRIM DRIVE, SUITE D
FOSTER CITY, CA 94404
650-349-3369

LANDSCAPE ARCHITECT
CALLANDER ASSOCIATES
300 SOUTH FIRST STREET, STE. 232
SAN JOSE, CA 95113
(408) 275-0565

SURVEYOR
MacLEOD AND ASSOCIATES
965 CENTER STREET
SAN CARLOS, CA 94070
(650) 593-8580

STRUCTURAL ENGINEER
BIGGS CARDOSA ASSOCIATES INC.
865 THE ALAMEDA
SAN JOSE, CA 95126-3133
(408) 296-5515

ELECTRICAL ENGINEER
ZEIGER ENGINEERS, INC.
478 3RD STREET
OAKLAND, CA 94607
(510) 452-9391

40 YEARS
Callander Associates
Landscape Architecture

300 South First Street, Ste. 232
San Jose, CA 95113
T 408.275.0565
F 408.275.8047

Revisions

© Copyright 2015
Callander Associates
Landscape Architecture, Inc.

LICENSED LANDSCAPE ARCHITECT
MARK ALLEN HUNTER No. 4745
Signature
Sept. 30, 2015
Renewal Date
Date
STATE OF CALIFORNIA

COVER SHEET
SPORTS CENTER - WEST COURT
RENOVATIONS AND IMPROVEMENTS
21111 Stevens Creek Blvd., Cupertino, CA 95014

Date	5/27/2015
Scale	AS SHOWN
Drawn By	
Checked	
Project No.	14.044
Cadd File	14044cs

Sheet No.
L-1

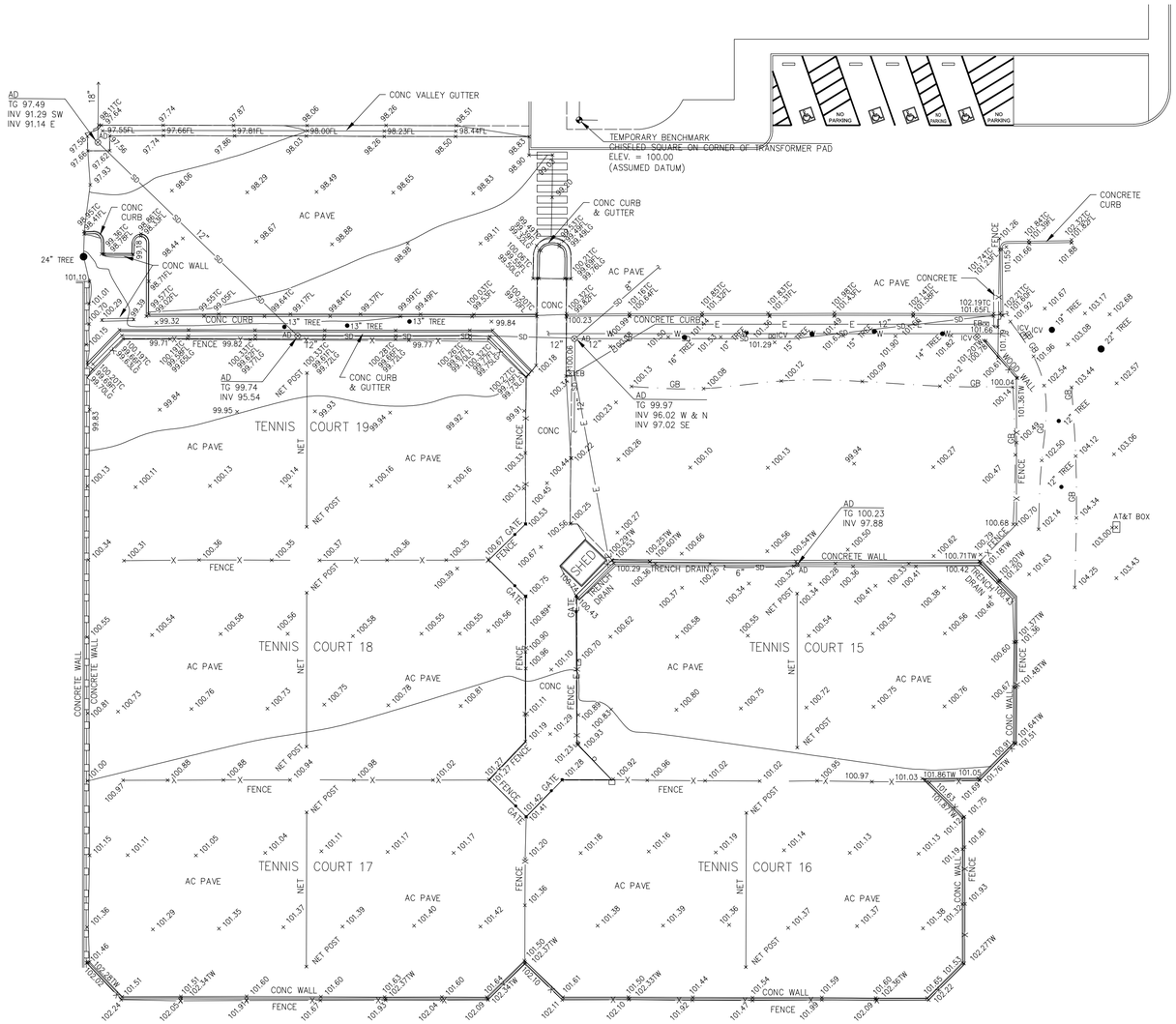

LEGEND

AC PAVE	ASPHALT CONCRETE PAVEMENT
AD	AREA DRAIN
CO	CLEANOUT
CONC	CONCRETE
EB	ELECTRIC BOX
FL	FLOWLINE
GB	GRADEBREAK
ICV	IRRIGATION CONTROL VALVE
LG	LIP OF GUTTER
TC	TOP OF CURB
TW	TOP OF WALL
● 12" TREE	TREE W/ SIZE
—X—X—	FENCE
—SD—	STORM DRAIN LINE
—E—	ELECTRICAL
—W—	WATER LINE

LICENSED LAND SURVEYOR
DANIEL G. MacLEOD
No. 5304
STATE OF CALIFORNIA

MACLEOD AND ASSOCIATES
CIVIL ENGINEERING • LAND SURVEYING
965 CENTER STREET•SAN CARLOS•CA 94070•(650) 593-8580

0 10' 20' 40'

40 YEARS
Callander Associates
Landscape Architecture

300 South First Street, Ste. 232
San Jose, CA 95113
T 408.275.0565
F 408.275.8047

Revisions

© Copyright 2015
Callander Associates
Landscape Architecture, Inc.

EXISTING CONDITIONS PLAN
SPORTS CENTER - WEST COURT RENOVATIONS AND IMPROVEMENTS
21111 Stevens Creek Blvd., Cupertino, CA 95014

Date	5/27/2015
Scale	AS SHOWN
Drawn By	
Checked	
Project No.	14.044
Cadd File	14044ex

Sheet No.
L-2

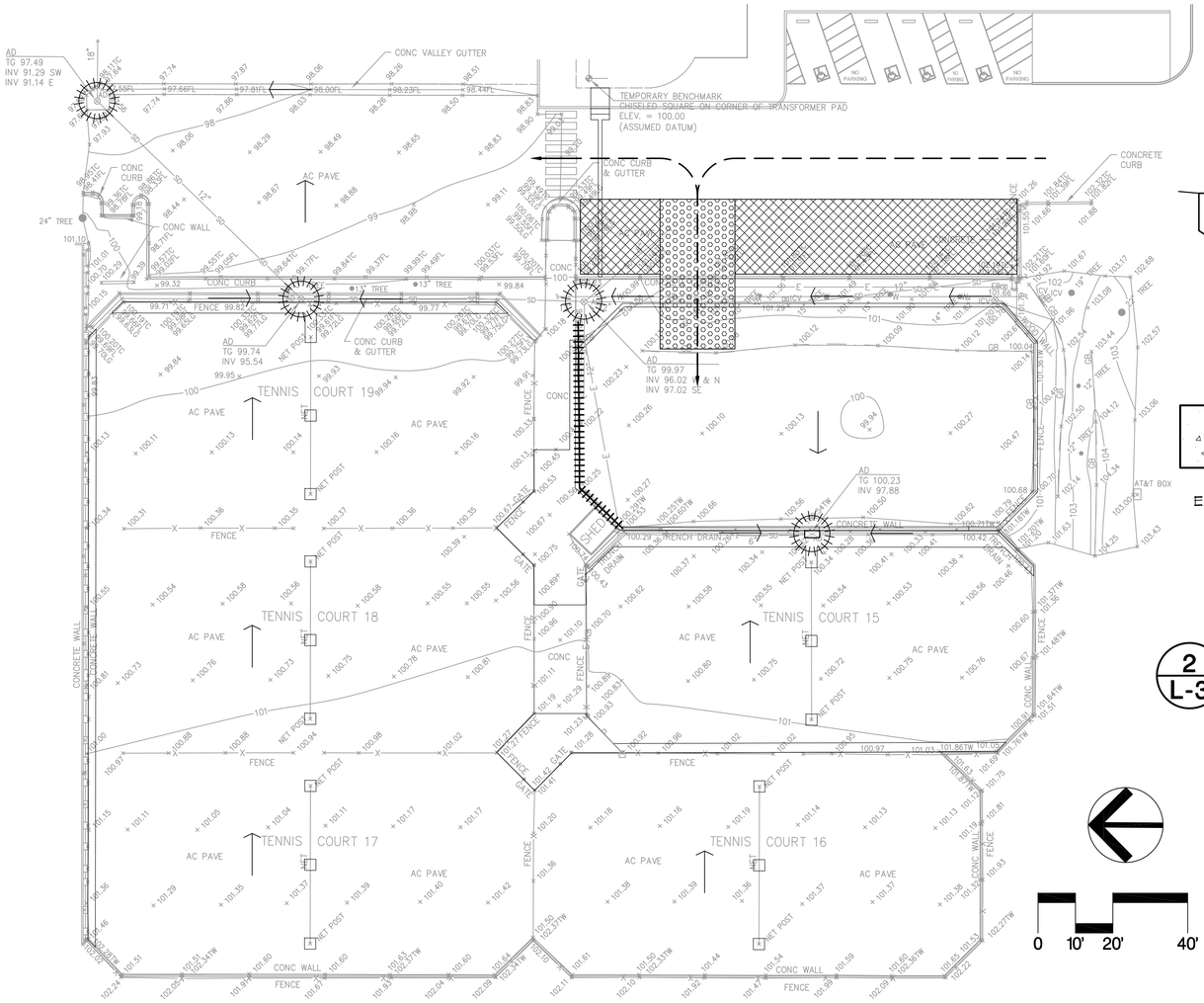

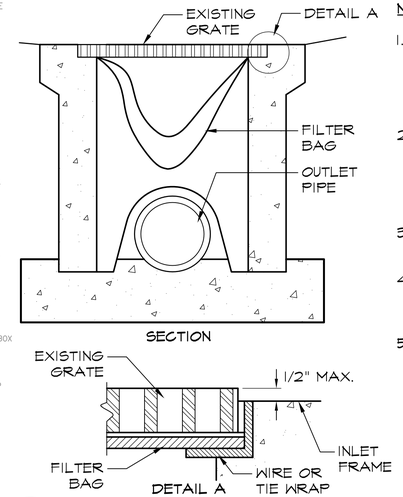

NOTES

1. THE FILTER BAG SHALL BE MANUFACTURED FROM UV RESISTANT POLYPROPYLENE NYLON, POLYESTER, OT ETHYLENE FABRIC WITH A MINIMUM TENSILE STRENGTH OF 50 LBS PER LINEAL FOOT. AN EQUIVALENT OPENING SIZE NOT GREATER THAN A 20 SIEVE AND WITH A MINIMUM FLOW RATE OF 40 GAL / MIN. / SQ. FT.
2. THE FILTER BAG MAY BE SUSPENDED FROM OR HELD IN PLACE BY THE EXISTING INLET GRATE (OR OTHER APPROVED METHOD). NO MODIFICATION SHALL BE DONE TO THE INLET GRATE OR FRAME. THE INLET GRATE SHALL NOT REST MORE THAN 1/2" ABOVE THE INLET FRAME (SEE DETAIL A).
3. THE FILTER BAG MAY EXTEND TO THE BOTTOM OF THE INLET BOX PROVIDED THE OUTLET PIPE IS UNOBSTRUCTED
4. FLOWS SHALL NOT BE ALLOWED TO BYPASS THE BAG. THE BAG OR ITS FRAME SHALL CATCH FLOWS AT ALL SIDES OF THE INLET EXCEPT AS SHOWN FOR FLOOD RELEASE.
5. INLET FILTER BAGS SHALL BE INSPECTED WEEKLY AND AFTER EACH RAINFALL DURING THE WET SEASON AND MONTHLY DURING THE DRY SEASON. SEDEMENT AND DEBRIS SHALL BE REMOVED BEFORE ACCUMULATIONS HAVE REACHED 1/3 THE DEPTH OF THE BAG OR AT THE DIRECTION OF THE ENGINEER. BAGS SHALL BE REPAIRED OR REPLACED AS SOON AS DAMAGE OCCURS.

2 / L-3 STORM DRAIN INLET PROTECTION
PLAN AND SECTION

0 1/2' 1' 2'

14044_FilterBags_12.dwg

EROSION CONTROL LEGEND

- STABILIZED CONSTRUCTION ENTRANCE (3 / L-3)
- CONSTRUCTION STAGING AREA
- FIBER ROLL (1 / L-3)
- STORM DRAIN INLET PROTECTION (2 / L-3)
- TRENCH DRAIN CATCH BASIN, SEE GRADING AND DRAINAGE PLAN, SHEET L-6
- SURFACE FLOW DIRECTION
- CONTRACTOR SITE ACCESS

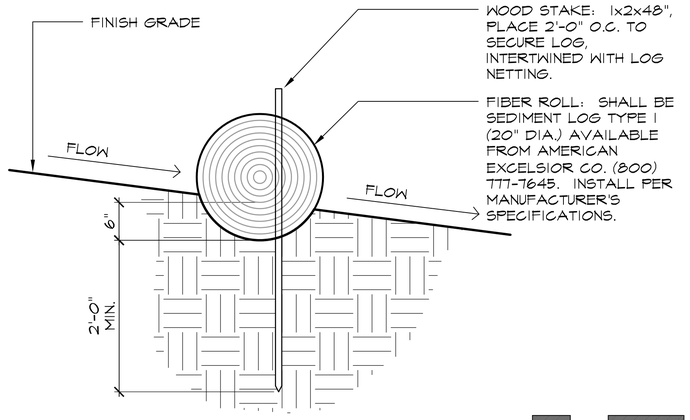

EROSION CONTROL NOTES

(REFER TO SHEET L-4, CITY OF CUPERTINO BEST MANAGEMENT PRACTICES)

1 / L-3 FIBER ROLL
SECTION

0 1/2' 1' 2'

12057FiberRoll_12.dwg

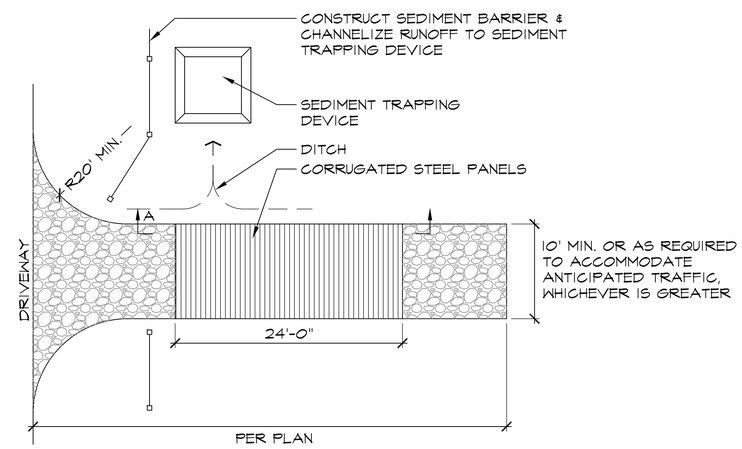

3 / L-3 STABILIZED CONSTRUCTION ENTRANCE
PLAN AND SECTION

0 4' 8' 16'

12057StabilizedEntry_96.dwg

Callander Associates
Landscape Architecture

300 South First Street, Ste. 232
San Jose, CA 95113
T 408.275.0565
F 408.275.8047

Revisions

© Copyright 2015
Callander Associates
Landscape Architecture, Inc.

LICENSED LANDSCAPE ARCHITECT
MARK SCHNITKER No. 4082
Signature
Sept. 30, 2016
Renewal Date
Date
STATE OF CALIFORNIA

EROSION CONTROL PLAN
SPORTS CENTER - WEST COURT RENOVATIONS AND IMPROVEMENTS
21111 Stevens Creek Blvd., Cupertino, CA 95014

Date	5/27/2015
Scale	AS SHOWN
Drawn By	
Checked	
Project No.	14.044
Cadd File	14044ec

Sheet No.
L-3

In the Santa Clara Valley, storm drains flow directly to our local creeks, and on to San Francisco Bay, with no treatment.

Storm water pollution is a serious problem for wildlife dependent on our waterways and for the people who live near polluted streams or baylands.

Proper management of construction sites reduces pollution significantly.

This sheet summarizes the "Best Management Practices" (BMPs) for storm water pollution prevention.

ORDINANCE OF THE CITY OF CUPERTINO FOR STORM WATER POLLUTION PREVENTION & WATERCOURSE PROTECTION: Chapter 9.18

9.18.040 Discharge into the storm drain prohibited

It shall be unlawful to discharge, or cause, allow, or permit to be discharged into any storm drain or natural outlet or channel all waste, including but not restricted to, sewage, industrial wastes, petroleum products, coal tar or any refuse substance arising from the manufacture of gas from coal or petroleum, chemicals, detergents, solvents, paints, contaminated or chlorinated swimming pool water, pesticides, herbicides and fertilizers.

9.18.070 Accidental Discharge

All persons shall notify the Director of Public Works by telephone immediately upon accidentally discharging wastes to enable countermeasures to be taken by the City to minimize damage to storm drains and the receiving waters. This notification shall be followed, within ten (10) days of the date of occurrence, by a detailed written statement describing the causes of the accidental discharge and the measures being taken to prevent further occurrences. Such notifications will not relieve persons of liability for violations of this chapter or for any fines imposed on the city on account thereof under Section 13350 of the California Water Code, or for violations of Section 5650 of California Fish and wildlife Code, or any other applicable provisions of State or Federal laws.

9.18.220 Violation*

Any person who violates any provision of this Chapter shall be guilty of a misdemeanor and upon conviction thereof shall be punished as provided in Chapter 1.12 of the City of Cupertino Municipal Code.

Chapter 1.12: General Penalty, Section 1.12.010, paragraph D, states*:

Unless otherwise specified by this code, an infraction is punishable by:
1. A fine not to exceed $100 for a first violation
2. A fine not to exceed $200 for a second violation
3. A fine not to exceed $500 for a third violation of the same chapter within one year.

9.18.240 Civil penalty for illicit discharges*

Any person who discharges pollutants, in violation of this Chapter, by the use of illicit connections shall be civilly liable to the City in a sum **not to exceed twenty-five thousand dollars per day per violation** for each day in which such violation occurs.

*Excerpts – For complete CODE language refer to the City of Cupertino Municipal Code.

Cupertino
Building Dept: 408-777-3228
Public Works Dept: 408-777-3354

Santa Clara County
Recycling Hotline: 800-533-8414
www.reducewaste.org
www.recyclestuff.com
Small Business Hazardous Waste: 408-299-7300

Cupertino Sanitary Sewer Distr 408-253-7071

Santa Clara Valley Urban Runoff Pollution Prevention Prgm 800-794-2482

State Office of Emergency Services 1-800-852-7550 (24 hrs)

Report spills to 911

General Construction and Site Supervision

Storm Drain Pollution from Construction Activities

Construction sites are common sources of storm water pollution. Materials and wastes that blow or wash into a storm drain, gutter, or street have a direct impact on local creeks and the Bay.

As a contractor, or site supervisor, owner or operator of a site, you may be responsible for any environmental damage caused by your subcontractors or employees.

General Principles

- Keep an **orderly site** and ensure good housekeeping practices are used.
- **Maintain equipment** properly.
- **Cover** materials when they are not in use.
- Keep materials **away from streets**, storm drains and drainage channels.
- Ensure **dust control** water doesn't leave site or discharge to storm drains.

Advance Planning To Prevent Pollution

- **Schedule excavation and grading activities for dry weather periods.** To reduce soil erosion, plant temporary vegetation or place other erosion controls before rain begins. Use the *Erosion and Sediment Control Manual*, available from the Regional Water Quality Control Board, as a reference.
- **Control the amount of runoff** crossing your site (especially during excavation!) by using berms or temporary or permanent drainage ditches to divert water flow around the site. Reduce stormwater runoff velocities by constructing temporary check dams or berms where appropriate.
- **Train your employees and subcontractors.** The city can provide brochures about these issues for you to distribute to workers at your construction site. Inform your subcontractors about the stormwater requirements and their own responsibilities. Use *Blueprint for a Clean Bay*, a construction best management practices guide available at our Building Dept. counter.

Good Housekeeping Practices

- **Designate one area of the site** for auto parking, vehicle refueling, and routine equipment maintenance. The designated area should be well away from streams or storm drain inlets, bermed if necessary. Make major repairs off site.
- **To prevent off-site tracking of dirt,** provide entrances with stabilized aggregate surfaces. Or provide a tire wash area.
- **Keep materials out of the rain** – prevent runoff contamination at the source. Cover exposed piles of soil or construction materials with plastic sheeting or temporary roofs. Before it rains, sweep and remove materials from surfaces that drain to storm drains, creeks, or channels.
- **Keep pollutants off exposed surfaces**. Place trash cans and recycling receptacles around the site to minimize litter.
- **Clean up leaks, drips and other spills** immediately so they do not contaminate soil or groundwater or leave residue on paved surfaces. Use dry cleanup methods whenever possible. If you must use water, use just enough to keep the dust down.
- **Cover and maintain dumpsters**. Place dumpsters under roofs or cover with tarps or plastic sheeting secured around the outside of the dumpster. Never clean out a dumpster by hosing it down on the construction site.
- **Place portable toilets** away from storm drains. Make sure portable toilets are in good working order. Check frequently for leaks.

Materials/Waste Handling

- **Practice Source Reduction** -- minimize waste when you order materials. Estimate carefully.
- **Recycle excess materials,** whenever possible, such as concrete, asphalt, scrap metal, solvents, degreasers, cleared vegetation, paper, rock, and vehicle maintenance materials such as used oil, antifreeze, batteries, and tires: www.reducewaste.org for info.
- **Dispose of all wastes properly**. Materials that cannot be recycled must be taken to an appropriate landfill or disposed of as hazardous waste. Never bury waste materials or leave them in the street or near a creek or stream bed.

Permits

- In addition to local grading and building permits, you will need to obtain coverage under the State's General Construction Activity Stormwater Permit if your construction **site's disturbed area totals 5 acres or more.** Information on the General Permit can be obtained from the Regional Water Quality Control Board. (This criteria will change to one acre as of Mar. 2003.)

Landscaping, Gardening, and Pool Maintenance

Landscaping/Garden Maintenance

- **Protect stockpiles** and landscaping materials from wind and rain by storing them under tarps or secured plastic sheeting.
- **Schedule** grading and excavation projects during dry weather.
- Use temporary check dams or ditches to divert runoff away from storm drains.
- **Protect storm drains with sandbags, gravel-filled bags, straw wattles,** or other sediment controls.
- **Re-vegetation** is an excellent form of erosion control for any site.
- **Store** pesticides, fertilizers, and other chemicals indoors or in a shed or storage cabinet.
- **Use pesticides sparingly**, according to instructions on the label. Rinse empty containers, and use rinsewater as product. Dispose of rinsed, empty containers in the trash. Dispose of unused pesticides as hazardous waste.
- In Cupertino, **residents** with curbside recycling can collect lawn, garden and tree trimmings in yardwaste totters. Yardwaste will be collected and composted by the city's contractors. Residents are encouraged to compost yardwaste on-site themselves. Or take yardwaste to a landfill where it will be composted.
- **Landscape contractors** should take clippings and pruning waste to a landfill that composts yard waste (SFI's Newby Island and Zanker Rd. landfill are the nearest).
- **Do not blow or rake leaves into the street.**

Storm Drain Pollution from Landscaping and Swimming Pool Maintenance

Many landscaping activities expose soils and increase the likelihood that earth and garden chemicals will run off into the storm drains during irrigation or when it rains.

Swimming pool water containing chlorine and copper-based algaecides should never be discharged to storm drains. These chemicals are toxic to aquatic life

Pool/Fountain/Spa Maintenance

Draining pools or spas

When it's time to drain a pool, spa, or fountain, please be sure to call the Cupertino Sanitary District before you start for further guidance on flow rate restrictions, backflow prevention, and handling special cleaning waste (such as acid wash). Discharge flows should be kept to the low levels typically possible through a garden hose. Higher flow rates may be prohibited by local ordinance.

- **Never discharge pool or spa water to a street or storm drain; discharge to a sanitary sewer cleanout.**
- If possible, when emptying a pool or spa, let chlorine dissipate for a few days and then recycle/reuse water by draining it gradually onto a landscaped area.
- **Do not use copper-based algaecides.** Control algae with chlorine or other alternatives, such as sodium bromide.

Filter Cleaning

- **Never clean a filter in the street or near a storm drain.** Rinse cartridge and diatomaceous earth filters onto a dirt area, and spade filter residue into soil. Dispose of spent diatomaceous earth in the garbage.
- **If there is no suitable dirt area**, call Cupertino Sanitary for instructions on discharging filter backwash or rinsewater to the sanitary sewer.

Earth-Moving Activities

Storm Drain Pollution from Earth-Moving Activities

Soil excavation and grading operations loosen large amounts of soil that can flow or blow into storm drains when handled improperly. Sediments in runoff can clog storm drains, smother aquatic life, and destroy habitats in creeks and the Bay. Effective erosion control practices reduce the amount of runoff crossing a site *and* slow the flow with check dams or roughened ground surfaces.

Practices During Construction

- Remove existing vegetation only when absolutely necessary. **Plant temporary vegetation for erosion control** on slopes or where construction is not immediately planned.
- **Protect downslope drainage courses, streams, and storm drains** with wattles, or temporary drainage swales. Use check dams or ditches to **divert runoff around excavations**. Refer to the Regional Water Quality Control Board's *Erosion and Sediment Control Field Manual* for proper erosion and sediment control measures.
- **Cover stockpiles** and excavated soil with secured tarps or plastic sheeting.

Earth-Moving Activities

Storm Drain Pollution from Earth-Moving Activities

Soil excavation and grading operations loosen large amounts of soil that can flow or blow into storm drains when handled improperly. Sediments in runoff can clog storm drains, smother aquatic life, and destroy habitats in creeks and the Bay. Effective erosion control practices reduce the amount of runoff crossing a site *and* slow the flow with check dams or roughened ground surfaces.

Practices During Construction

- Remove existing vegetation only when absolutely necessary. **Plant temporary vegetation for erosion control** on slopes or where construction is not immediately planned.
- **Protect downslope drainage courses, streams, and storm drains** with wattles, or temporary drainage swales. Use check dams or ditches to **divert runoff around excavations**. Refer to the Regional Water Quality Control Board's *Erosion and Sediment Control Field Manual* for proper erosion and sediment control measures.
- **Cover stockpiles** and excavated soil with secured tarps or plastic sheeting.

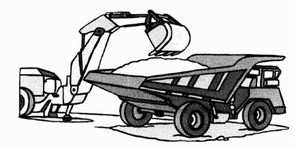

Heavy Equipment Operation

Stormwater Pollution from Heavy Equipment on Construction Sites

Poorly maintained vehicles and heavy equipment that leak fuel, oil, antifreeze or other fluids on the construction site are common sources of storm drain pollution. Prevent spills and leaks by isolating equipment from runoff channels, and by watching for leaks and other maintenance problems. Remove construction equipment from the site as soon as possible.

Site Planning and Preventive Vehicle Maintenance

- **Designate one area** of the construction site, well away from streams or storm drain inlets, for auto and equipment parking, refueling, and routine vehicle and equipment maintenance. Contain the area with berms, sand bags, or other barriers.
- **Maintain all vehicles** and heavy equipment. Inspect frequently for and repair leaks.
- **Perform** major **maintenance,** repair jobs, and vehicle and equipment washing **off-site**, where cleanup is easier.
- If you must drain and replace motor oil, radiator coolant, or other fluids on site, **use drip pans** or drop cloths to catch drips and spills. Collect all spent fluids, store in separate containers, and properly dispose as hazardous waste (recycle whenever possible).
- **Do not use diesel oil to lubricate** equipment parts, or clean equipment. Use only water for any onsite cleaning.
- **Cover exposed fifth wheel hitches** and other oily or greasy equipment during rain events.

Spill Cleanup

- **Clean up spills immediately**.
- **Never hose down** "dirty" pavement or impermeable surfaces where fluids have spilled. **Use dry cleanup methods** (absorbent materials, cat litter, and/or rags) whenever possible and properly dispose of absorbent materials.
- **Sweep** up spilled dry materials immediately. Never attempt to "wash them away" with water, or bury them.
- **Use as little water as possible** for dust control. Ensure water used doesn't leave silt or discharge to storm drains.
- **Clean up spills on dirt areas** by digging up and properly disposing of contaminated soil.
- **Call 911 for significant spills**.
- If the spill poses a **significant hazard** to human health and safety, property or the environment, you must also **report it** to the State Office of Emergency Services.

The property owner and the contractor share ultimate responsibility for the activities that occur on a construction site. You may be held responsible for any environmental damage caused by your subcontractors or employees.

Painting and Application of Solvents and Adhesives

Storm Drain Pollution from Paints, Solvents, and Adhesives

All paints, solvents, and adhesives contain chemicals that are harmful to wildlife in local creeks, San Francisco Bay, and the Pacific Ocean. Toxic chemicals may come from liquid or solid products or from cleaning residues or rags. Paint material and wastes, adhesives and cleaning fluids should be recycled when possible, or disposed of properly to prevent these materials from flowing into storm drains and watercourses.

Handling Paint Products

- **Keep all liquid paint products and wastes away from the gutter, street, and storm drains.**

Painting Cleanup

- **Never clean brushes or rinse paint containers into a street, gutter, storm drain, French drain, or creek.**
- For **water-based paints**, paint out brushes to the extent possible, and rinse into an inside sink drain that goes to the sanitary sewer.
- For **oil-based paints**, paint out brushes to the extent possible and clean with thinner or solvent. Filter and reuse thinners and solvents, where possible. Dispose of excess liquids and residue as hazardous waste.
- When thoroughly dry, empty paint cans, used brushes, rags, and drop cloths may be **disposed of as garbage**.

Paint Removal

- **Paint chips and dust from non-hazardous dry stripping and sand blasting** may be swept up or collected in plastic drop cloths and disposed of as trash.
- **Chemical paint stripping residue,** and chips and dust from **marine paints,** or **paints containing lead, mercury or tributyl tin** must be disposed of as hazardous wastes. Lead based paint removal requires a state-certified contractor.
- When stripping or cleaning **building exteriors** with high-pressure water, block storm drains. **Direct washwater onto a dirt area** and spade into soil. Or, check with Cupertino Sanitary District to find out if you can mop or vacuum the washwater and **dispose of it in a sanitary sewer drain**. Sampling of the washwater may be required.
- **Washwater from painted buildings constructed before 1978** can contain high amounts of **Lead,** even if paint chips are not present. Before you begin stripping paint or cleaning pre-1978 building exteriors with water under high pressure, test paint for lead by taking paint scrapings to a local laboratory. (See Yellow Pages for a state-certified laboratory.)
- If there is **loose paint** on the building, or if the **paint tests positive for lead**, block storm drains. Check with Cupertino Sanitary District to determine whether you may discharge water to the sanitary sewer, or if you must send it offsite for disposal as hazardous waste.

Paint Disposal, Return or Donation

- **Dispose** of unwanted liquid paint, thinners, solvents, glues, and cleaning fluids **as hazardous waste** (call the Small Business Hazardous Waste Prgm: 299-7300).
- Or **Return** to supplier. (Unopened cans of paint may be able to be returned. Check with the vendor regarding its "buy-back" policy.)
- **Donate** excess paint (call 299-7300 to donate.)

Roadwork and Paving

General Business Practices

- Develop and implement **erosion/sediment control plans** for roadway embankments.
- Schedule excavation and grading work during **dry weather.**
- Check for and **repair leaking equipment**.
- Perform **major equipment repairs** at designated areas in your maintenance yard, where cleanup is easier. Avoid performing equipment repairs at construction sites.
- When **refueling** or when vehicle/equipment maintenance must be done on site, designate a location away from storm drains and creeks.
- **Do not use diesel oil to lubricate** equipment parts or clean equipment.
- **Recycle** used oil, concrete, broken asphalt, etc. whenever possible, or dispose of properly. (www.recyclestuff.com for list of recycling companies.)

Asphalt/Concrete Removal

- Avoid creating excess **dust** when breaking asphalt or concrete.
- After breaking up old pavement, be sure to **remove all chunks and pieces**. Make sure broken pavement does not come in contact with rainfall or runoff.
- When making **saw cuts**, use as little water as possible. Shovel or vacuum saw-cut slurry and remove from the site. Cover or protect storm drain inlets during saw-cutting. Sweep up, and properly dispose of, all residues.
- Sweep, **never hose down streets** to clean up tracked dirt. Use a street sweeper or vacuum truck. Do not dump vacuumed liquor in storm drains.

Storm Drain Pollution from Roadwork

Road paving, surfacing, and pavement removal happen right in the street, where there are numerous opportunities for asphalt, saw-cut slurry, or excavated material to illegally enter storm drains. Extra planning is required to store and dispose of materials properly and guard against pollution of storm drains, creeks, and the Bay.

During Construction

- **Avoid paving and seal coating in wet weather**, or when rain is forecast, to prevent fresh materials from contacting stormwater runoff.
- **Cover and seal catch basins and manholes** when applying seal coat, slurry seal, fog seal, or similar materials.
- **Protect drainage ways** by using earth dikes, sand bags, or other controls to divert or trap and filter runoff.
- Never wash excess material from **exposed-aggregate concrete** or similar treatments into a street or storm drain. Collect and recycle, or dispose to dirt area.
- **Cover stockpiles** (asphalt, sand, etc.) and other construction materials with plastic tarps. Protect from rainfall and prevent runoff with temporary roofs or plastic sheets and berms
- Park **paving machines** over drip pans or absorbent material (cloth, rags, etc.) to catch drips when not in use.
- **Clean up all spills and leaks** using "dry" methods (with absorbent materials and/or rags), or dig up, remove, and properly dispose of contaminated soil.
- Collect and recycle or appropriately dispose of excess abrasive gravel or sand. ???
- Avoid over-application by **water trucks** for dust control.

Fresh Concrete and Mortar Application

Storm Drain Pollution from Fresh Concrete and Mortar Applications

Fresh concrete and cement-related mortars that wash into lakes, streams, or estuaries are toxic to fish and the aquatic environment. Disposing of these materials to the storm drains or creeks can block storm drains, causes serious problems, and is prohibited by law.

General Business Practices

- Wash out concrete mixers only in designated **washout areas** in your yard, away from storm drains and waterways, where the water will flow into a temporary waste pit in a dirt area. Let water percolate through soil and dispose of settled, hardened concrete as garbage. Whenever possible, recycle washout by pumping back into mixers for reuse.
- **Wash out chutes** onto dirt areas that do not flow to streets or drains.
- **Always store both dry and wet materials under cover,** protected from rainfall and runoff and away from storm drains or waterways. Protect dry materials from wind.
- **Secure bags of cement** after they are open. Be sure to keep wind-blown cement powder away from streets, gutters, storm drains, rainfall, and runoff.
- **Do not use diesel fuel as a lubricant** on concrete forms, tools, or trailers.

During Construction

- **Don't mix up more** fresh concrete or cement than you will use in a two-hour period.
- Set up and **operate small mixers on tarps** or heavy plastic drop cloths.
- When cleaning up after driveway or sidewalk construction, **wash fines onto dirt areas**, not down the driveway or into the street or storm drain.
- **Protect** applications of fresh concrete and mortar **from rainfall** and runoff until the material has dried.
- Wash down **exposed aggregate concrete** only when the washwater can (1) flow onto a dirt **area**, (2) drain onto a **bermed surface** from which it can be pumped and disposed of properly, or (3) be vacuumed from a catchment created by blocking a storm drain inlet. If necessary, divert runoff with temporary berms. Make sure runoff does not reach gutters or storm drains.
- When breaking up pavement, be sure to pick up all the pieces and **dispose of properly**. Recycle large chunks of broken concrete. See www.reducewaste.org for info on recyclers.
- **Never bury waste** material. Dispose of small amounts of excess dry concrete, grout, and mortar in the trash.
- Never dispose of **washout** into the street, storm drains, drainage ditches, or streams.

Small Business Hazardous Waste Disposal Prgm
Businesses that generate less than 27 gallons or 220 pounds of hazardous waste per month are eligible to use this program.
Call 408-299-7300 for a quote.

CITY OF CUPERTINO

Santa Clara Valley Urban Runoff Pollution Prevention Program

Callander Associates Landscape Architecture
300 South First Street, Ste. 232
San Jose, CA 95113
T 408.275.0565
F 408.275.8047

Revisions

© Copyright 2015
Callander Associates Landscape Architecture, Inc.

LICENSED LANDSCAPE ARCHITECT
Signature
Sept. 30, 2016
Renewal Date
Date
STATE OF CALIFORNIA

BEST MANAGEMENT PRACTICES
SPORTS CENTER - WEST COURT
RENOVATIONS AND IMPROVEMENTS
21111 Stevens Creek Blvd., Cupertino, CA 95014

Date	5/27/2015
Scale	AS SHOWN
Drawn By	
Checked	
Project No.	14.044
Cadd File	14044ec

Sheet No.
L-4

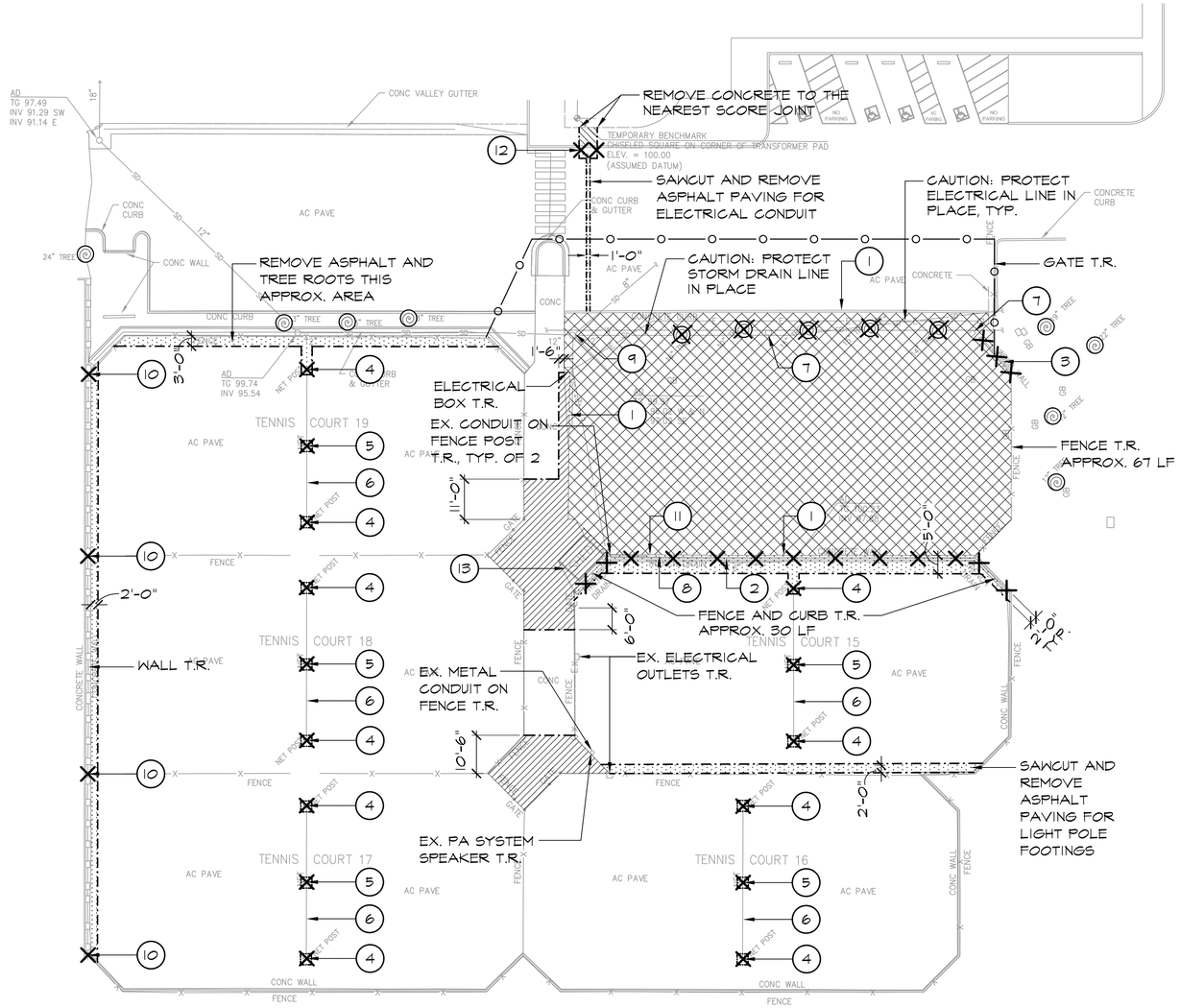

DEMOLITION NOTES

1. **CLEAR AND GRUB:** CLEAR AND GRUB ALL EXISTING VEGETATION, UNLESS OTHERWISE INDICATED, AS REQUIRED FOR SITE CONSTRUCTION OPERATIONS. LIMITS OF CLEARING SHALL BE REVIEWED WITH OWNER PRIOR TO COMMENCEMENT OF WORK. STRIP ALL ORGANIC MATTER TO A SUFFICIENT DEPTH TO COMPLETELY REMOVE SUCH MATERIAL.

   EXISTING SITE FURNISHINGS AND IRRIGATION EQUIPMENT TO BE REMOVED SHALL BE RETURNED TO OWNER.

2. **IRRIGATION EQUIPMENT:** UNLESS OTHERWISE NOTED ON PLANS, REMOVE ALL VISIBLE EXISTING IRRIGATION EQUIPMENT AND ANY BELOW-GRADE COMPONENTS THAT WOULD INTERFERE WITH THE WORK DURING TRENCHING AND/OR ROUGH GRADING OPERATIONS.

3. **SAWCUTTING:** ALL PAVEMENT AND CURB REMOVAL AS SHOWN ON THE PLAN SHALL BE ACCOMPLISHED BY SAWCUTTING.

   SAWCUTS SHALL BE NEAT AND CLEAN AND SHALL PROVIDE A SMOOTH TRANSITION BETWEEN NEW AND EXISTING FEATURES.

DEMOLITION LEGEND

	CLEAR AND GRUB
	REMOVE AND DISPOSE OF EXISTING ASPHALT PAVING, BASE ROCK, AND ASSOCIATED CURBS. ASSUME 10 INCH DEPTH TOTAL.
	REMOVE AND DISPOSE OF EXISTING CONCRETE PAVING AND BASE. ASSUME 10 INCH DEPTH TOTAL.
	REMOVE AND DISPOSE OF EXISTING TREE
	EXISTING TREE TO REMAIN, PROTECT IN PLACE
X	REMOVE AND DISPOSE OF ITEM
—o——o—	CONSTRUCTION FENCING, PER SPECS
—·—·—·—	SAWCUT
T.R.	TO REMAIN
T.B.R.	TO BE REMOVED

DISPOSITION ITEMS

1. SALVAGE AND RETURN CONSTRUCTION FENCE TO CITY, APPROX. 290 LF.
2. REMOVE AND DISPOSE OF TRENCH DRAIN, GRATE, AND ASSOCIATED AREA DRAIN, APPROX. 130 LF.
3. REMOVE AND DISPOSE OF 2X6 WOOD PLANKS, APPROX. 15 LF. FENCE T.R.
4. REMOVE AND DISPOSE OF NET POSTS AND ASSOCIATED FOOTINGS. SAWCUT AND REMOVE 3'-0" SQUARE AREA OF PAVING AROUND POST, TYPICAL.
5. REMOVE AND DISPOSE OF CENTER ANCHOR TIE DOWNS. SAWCUT AND REMOVE 3'-0" SQUARE AREA OF PAVING AROUND TIE DOWN, TYPICAL.
6. REMOVE AND SALVAGE EXISTING TENNIS COURT NETS. RE-INSTALL PER SITE CONSTRUCTION PLAN.
7. VALVE BOX T.R. ADJUST TO GRADE AND LOWER SURROUNDING MAINLINE. SEE SITE CONSTRUCTION PLAN FOR MORE INFORMATION.
8. REMOVE AND DISPOSE OF CONCRETE CURB AND ASSOCIATED FOOTING, APPROX. 125 LF.
9. AREA DRAIN T.R. ADJUST TO GRADE.
10. REMOVE AND DISPOSE OF FENCE END POST. CUT BACK FENCE FABRIC AND ATTACH TO NEW FENCE POST. SEE SITE CONSTRUCTION PLAN FOR POST LOCATION.
11. REMOVE AND DISPOSE OF 12' TALL CHAIN LINK FENCE TO CORNER POST AT SHED. REMOVE ASSOCIATED FOOTINGS. ASSUME APPROX. 10 LF, FIELD VERIFY.
12. REMOVE AND DISPOSE OF CURB AND GUTTER, APPROX. 5 LF.
13. TEMPORARILY REMOVE SHED DURING DEMOLITION AND POURING OPERATIONS. RELOCATE PER SITE CONSTRUCTION PLAN.

0 10' 20' 40'

40 YEARS
Callander Associates
Landscape Architecture

300 South First Street, Ste. 232
San Jose, CA 95113
T 408.275.0565
F 408.275.8047

Revisions

© Copyright 2015
Callander Associates
Landscape Architecture, Inc.

LICENSED LANDSCAPE ARCHITECT
MARK SCHNITER NO. 4082
Signature
Sept. 30, 2016
Renewal Date
Date
STATE OF CALIFORNIA

DEMOLITION PLAN
SPORTS CENTER - WEST COURT RENOVATIONS AND IMPROVEMENTS
21111 Stevens Creek Blvd., Cupertino, CA 95014

Date	5/27/2015
Scale	AS SHOWN
Drawn By	
Checked	
Project No.	14.044
Cadd File	14044dm

Sheet No.
L-5

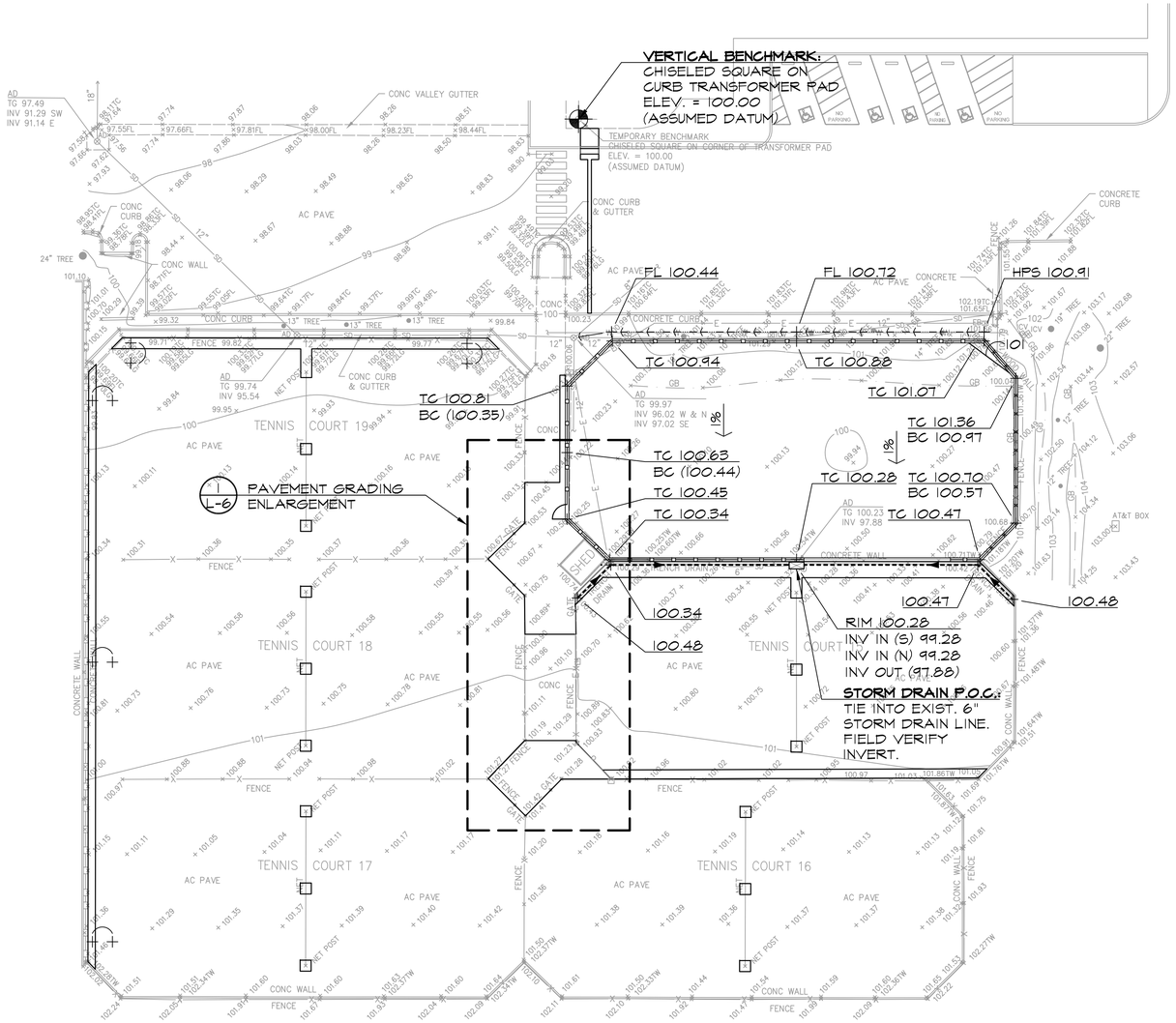

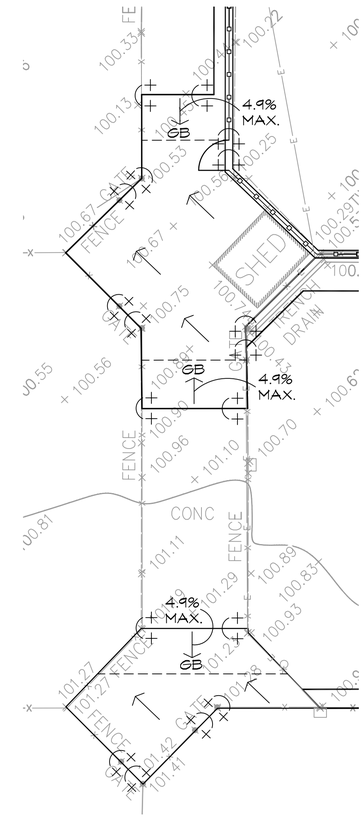

1 L-6 **PAVEMENT GRADING ENLARGEMENT PLAN**

0 5' 10' 20'

GRADING AND DRAINAGE LEGEND

101	PROPOSED CONTOUR: 1'-0" INTERVAL TYP. (EXISTING CONTOURS ARE SCREENED ON PLAN)
+100.95	PROPOSED SPOT ELEVATION (EXISTING SPOT ELEVATIONS ARE SCREENED ON PLAN)
	TRENCH DRAIN CATCH BASIN (2 / L-8)
	TRENCH DRAIN (1 / L-8)
1%	DIRECTION AND PERCENT SLOPE OF SHEET DRAINAGE. 1% MIN.
GB	GRADE BREAK
	SWALE
RIM 101.00 / INV 100.00	RIM ELEVATION AT PROPOSED DRAINAGE STRUCTURE / INVERT ELEVATION AT PROPOSED DRAINAGE STRUCTURE
	FLUSH CONDITION
	BENCHMARK
FL	FLOWLINE OF SWALE
TC	TOP OF CURB
BC	BOTTOM OF CURB
HPS	HIGH POINT SWALE

EXISTING

INV (100.09)	INVERT ELEVATION AT EXISTING DRAIN INLET
(100.35)	EXISTING SPOT ELEVATION

GRADING AND DRAINAGE NOTES

1. **GRADING AND DRAINAGE:** ALL PROPOSED PAVEMENT AND CURBS SHALL SMOOTHLY CONFORM TO EXISTING ADJACENT FEATURES TO REMAIN. PROVIDE POSITIVE DRAINAGE ON ALL PAVEMENT AND THROUGHOUT ALL PLANTING AREAS. FLOOD PAVEMENT AREAS UPON COMPLETION AND RECONSTRUCT ANY LOW SPOTS AS DIRECTED.
2. **BACKFILL:** EXCAVATED MATERIAL NOT SUITABLE FOR BACKFILLING SHALL BE REMOVED AND LEGALLY DISPOSED OF OFF-SITE.
3. **GRADING:** PERFORM ALL EARTHWORK AND GRADING PER GEOTECHNICAL ENGINEER'S RECOMMENDATIONS.

0 10' 20' 40'

40 YEARS
Callander Associates
Landscape Architecture

300 South First Street, Ste. 232
San Jose, CA 95113
T 408.275.0565
F 408.275.8047

Revisions

© Copyright 2015
Callander Associates
Landscape Architecture, Inc.

LICENSED LANDSCAPE ARCHITECT
MARK SCHUTTER NO. 4082
Signature
Sept. 30, 2016
Renewal Date
Date
STATE OF CALIFORNIA

GRADING AND DRAINAGE PLAN
SPORTS CENTER - WEST COURT RENOVATIONS AND IMPROVEMENTS
21111 Stevens Creek Blvd., Cupertino, CA 95014

Date	5/27/2015
Scale	AS SHOWN
Drawn By	
Checked	
Project No.	14.044
Cadd File	14044gd

Sheet No.
L-6

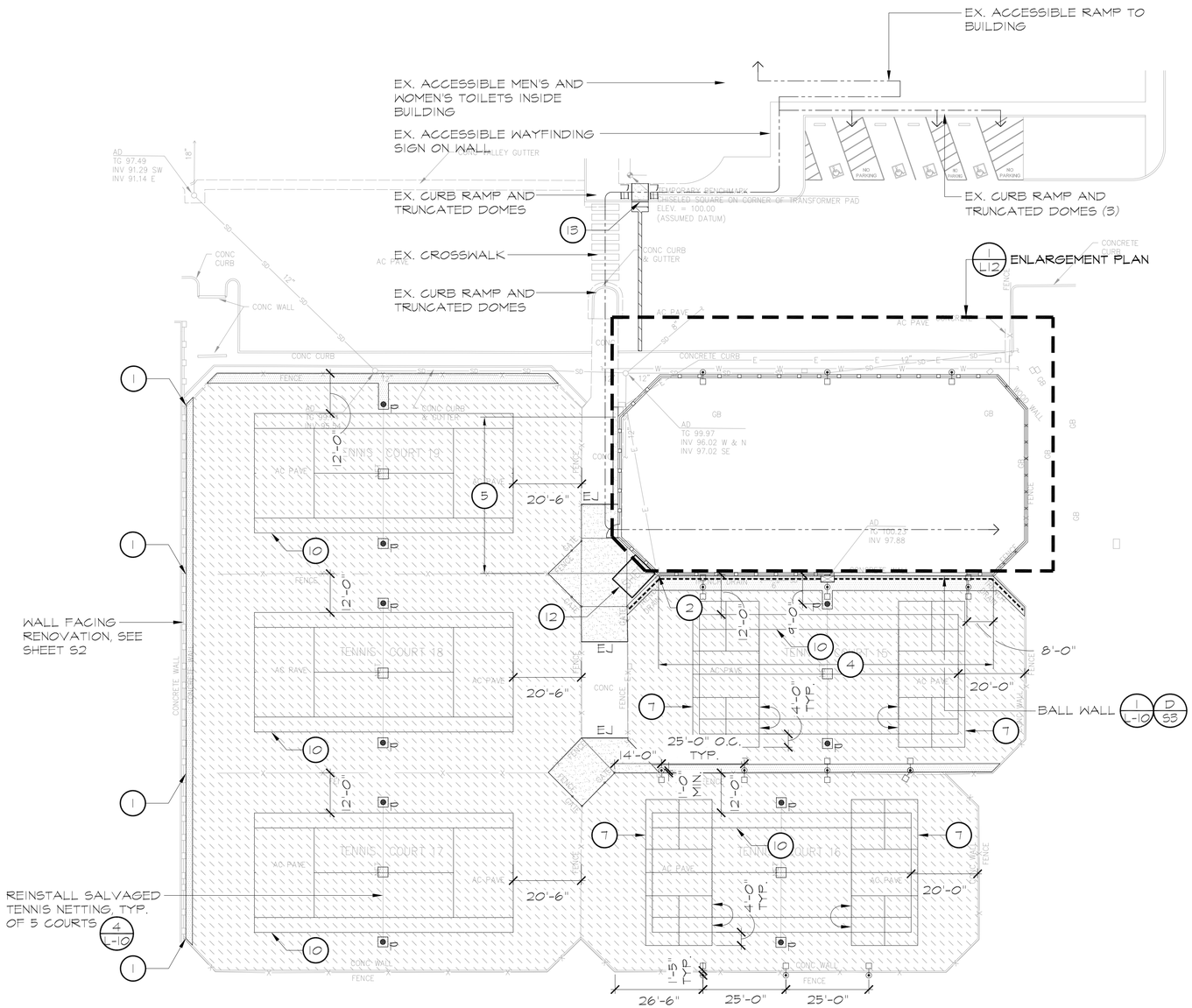

SITE CONSTRUCTION LEGEND

- SLIPSHEET OVERLAY (4 / L-8)
- SPORT COURT PAVEMENT (3 / L-8)
- CONCRETE PAVEMENT (5 / L-8)
- EXPANSION JOINT, TYP. / SCORE JOINT, TYP. (6 / L-8)
- CURB, TYPE PER PLAN
- CHAIN LINK FENCE (5 / L-9)
- CURB, TYPE 2
- EXISTING CHAIN LINK FENCE
- WINDSCREEN (5 / L-9)
- ACCESSIBLE CHAIN LINK GATE (6 / L-9)
- MULCH
- ASPHALT TRENCH (3 / L-10)
- BASKETBALL STANDARD (2 / L-10)
- TENNIS NET AND POST (4 / L-10)
- TRENCH DRAIN, SEE GRADING AND DRAINAGE PLAN
- TENNIS COURT LIGHT, SEE ELECTRICAL PLANS
- IRRIGATION MAINLINE
- EXISTING IRRIGATION VALVE, ADJUSTED TO GRADE (5 / L-10)
- ALIGN
- ACCESSIBLE ROUTE, 5% MAX. RUNNING SLOPE, 2% MAX. CROSS SLOPE, MIN. 4' WIDE

SITE CONSTRUCTION NOTES

1. DIMENSIONS: ALL WRITTEN DIMENSIONS SUPERSEDE SCALED DIMENSIONS.

2. EXPANSION JOINTS: INSTALL EXPANSION JOINTS AS SHOWN ON DRAWINGS, AS WELL AS BETWEEN CONCRETE FLATWORK AND WALLS, CURBS, AND EXISTING FLATWORK OR STRUCTURES.

3. PROJECT STAKING: ALL PROPOSED SITE FEATURES SHALL BE STAKED IN FIELD FOR REVIEW BY THE OWNER'S REPRESENTATIVE PRIOR TO CONSTRUCTION. ALL CURVES SHALL BE SMOOTH AND CONTINUOUS WITH CAREFULLY MATCHED TANGENTS.

4. MULCH: INSTALL A UNIFORM TWO INCH COVERING OF SMALL DECORATIVE BARK, 3/4 INCH TO 7/8 INCH PARTICLE SIZE, IN AREAS SHOWN ON PLAN. MATERIAL AVAILABLE FROM REUSER, INC., (707)431-1111.

5. ASPHALT RESTORATION: ALLOW IN BID 2500 SQ. FT. OF ASPHALT PAVEMENT REPAIR REQUIRED AS A RESULT OF DAMAGE DONE DURING CONSTRUCTION. REFER TO (6 / L-10) FOR PAVEMENT DETAIL. RESTORE PAVEMENT STRIPING AND MARKINGS TO ORIGINAL CONDITION IN AREAS SUBJECT TO REPAIR.

KEY NOTES

1. INSTALL NEW FENCE POST PER (A / S3) (5 / L-9). ATTACH EXISTING CHAIN LINK FABRIC AS NECESSARY TO CLOSE GAP BETWEEN FENCE AND WALL.
2. INSTALL NEW FENCE POST NEXT TO EXISTING FENCE POST AND ADD CHAIN LINK FABRIC AS NECESSARY TO CLOSE GAP.
3. CURB TYPE 1 (1 / L-9)
4. CURB TYPE 3 (3 / L-9)
5. CURB TYPE 4 (4 / L-9)
6. BADMINTON COURT STRIPING (1 / L-11)
7. PICKLEBALL COURT STRIPING (2 / L-11)
8. BASKETBALL COURT STRIPING (5 / L-11)
9. VOLLEYBALL COURT STRIPING (3 / L-11)
10. TENNIS COURT STRIPING (4 / L-11)
11. BASKETBALL COURT STRIPING (HALF COURT) (5 / L-11)
12. PLACE EXISTING SHED ON NEW CONCRETE PAVEMENT
13. CURB AND GUTTER PER CUPERTINO CITY STANDARD DETAIL #A2-6 (6 / L-11)
14. CURB TYPE 2 (2 / L-9)

OCCUPANT LOAD FOR EXITING

USE	AREA	TWO EXITS REQUIRED WHEN OCCUPANCY OVER	OCCUPANT LOAD	TWO EXITS REQUIRED?
OUTDOOR SPORT COURT	6,910 SF	49	36*	NO

*ASSUMES 3 ON 3 BASKETBALL PLUS 3 SPECTATORS AT ALL 4 HALF COURTS (3+3+3) X 4 COURTS = 36 PEOPLE. OCCUPANT LOAD APPROVED BY BUILDING OFFICIAL 5/14/15. 2013 CBC 1004.5 OUTDOOR AREAS.

0 10' 20' 40'

40 YEARS
Callander Associates
Landscape Architecture
300 South First Street, Ste. 232
San Jose, CA 95113
T 408.275.0565
F 408.275.8047

Revisions

© Copyright 2015
Callander Associates
Landscape Architecture, Inc.

LICENSED LANDSCAPE ARCHITECT
GARY SLEIGHTER No. 4080
Signature
Sept. 30, 2016
Renewal Date
Date
STATE OF CALIFORNIA

SITE CONSTRUCTION PLAN
SPORTS CENTER - WEST COURT RENOVATIONS AND IMPROVEMENTS
21111 Stevens Creek Blvd., Cupertino, CA 95014

Date	5/27/2015
Scale	AS SHOWN
Drawn By	
Checked	
Project No.	14.044
Cadd File	14044sc

Sheet No.
L-7

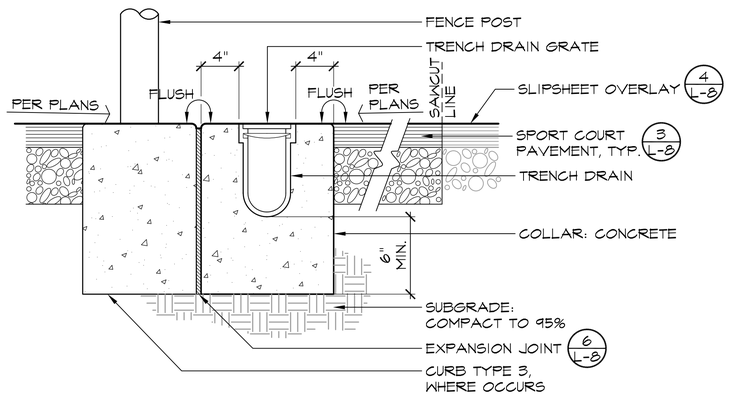

1 L-8 TRENCH DRAIN SECTION

0 1/2' 1' 2'

14044 Trench Drain 8.dwg

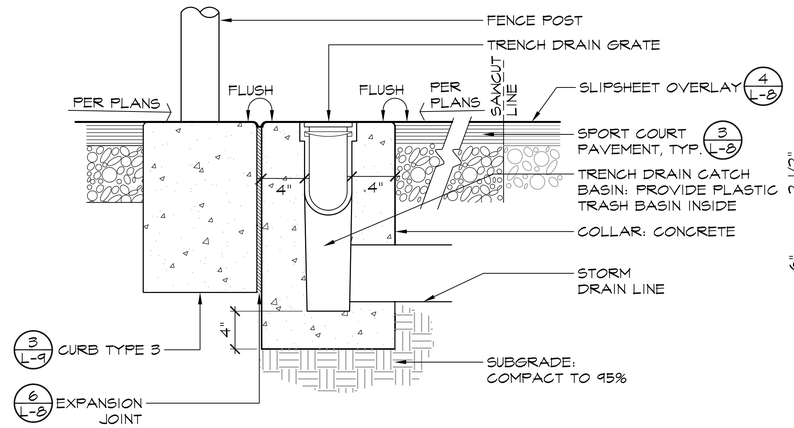

2 L-8 TRENCH DRAIN CATCH BASIN SECTION

0 1/2' 1' 2'

14044 Trench Drain Catch Basin 8.dwg

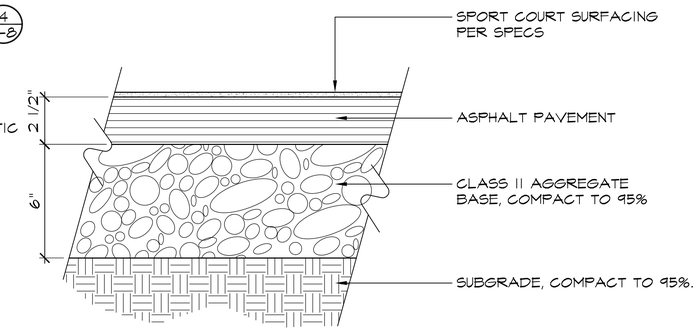

3 L-8 SPORT COURT PAVEMENT SECTION

0 1/4' 1/2' 1'

14044_AsphaltPavement_4.dwg

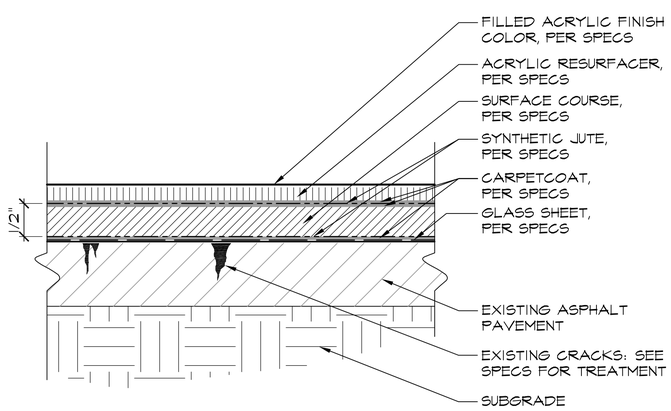

4 L-8 SLIPSHEET OVERLAY SECTION

N.T.S.

14044tennispaving_3.dwg

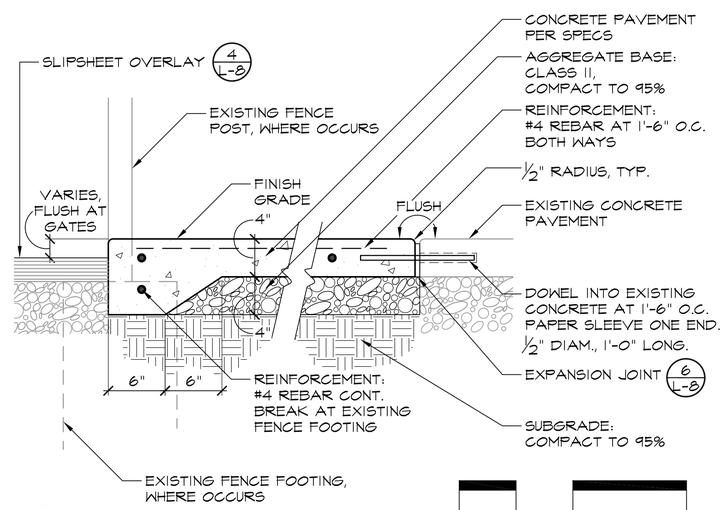

5 L-8 CONCRETE PAVEMENT SECTION

0 1/2' 1' 2'

14044 Concrete Paving 8.dwg

NOTE:

1. DISCONTINUE REBAR 3" FROM ALL EXPANSION JOINTS

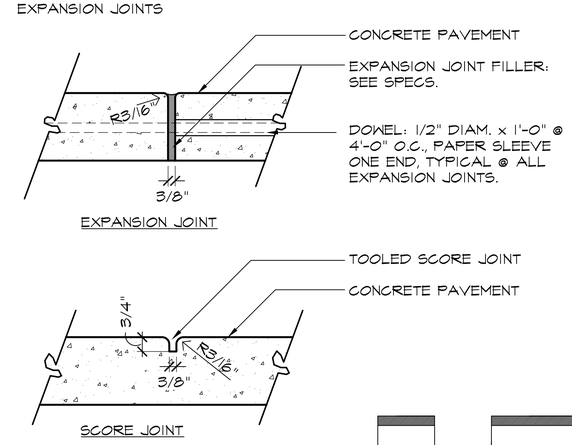

6 L-8 CONCRETE JOINTS SECTION

0 3" 6" 12"

14044_Concrete Joints 1 4.dwg

Callander Associates
Landscape Architecture

300 South First Street, Ste. 232
San Jose, CA 95113
T 408.275.0565
F 408.275.8047

Revisions

© Copyright 2015
Callander Associates
Landscape Architecture, Inc.

LICENSED LANDSCAPE ARCHITECT
MARK SCHNITER No. 4082
Signature
Sept. 30, 2016
Renewal Date
Date
STATE OF CALIFORNIA

CONSTRUCTION DETAILS

SPORTS CENTER - WEST COURT RENOVATIONS AND IMPROVEMENTS
21111 Stevens Creek Blvd., Cupertino, CA 95014

Date	5/27/2015
Scale	AS SHOWN
Drawn By	
Checked	
Project No.	14.044
Cadd File	14044dt

Sheet No.
L-8

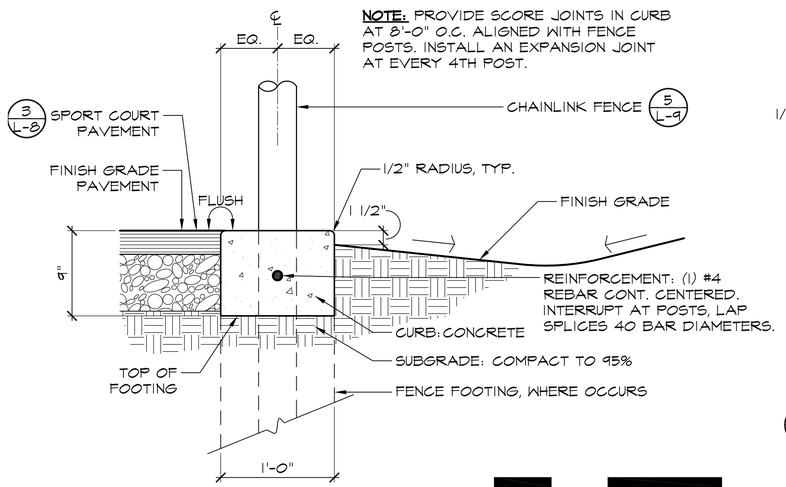

1 L-9 CURB TYPE1 SECTION

0 1/2' 1' 2'

14044 Concrete Curb 1 8.dwg

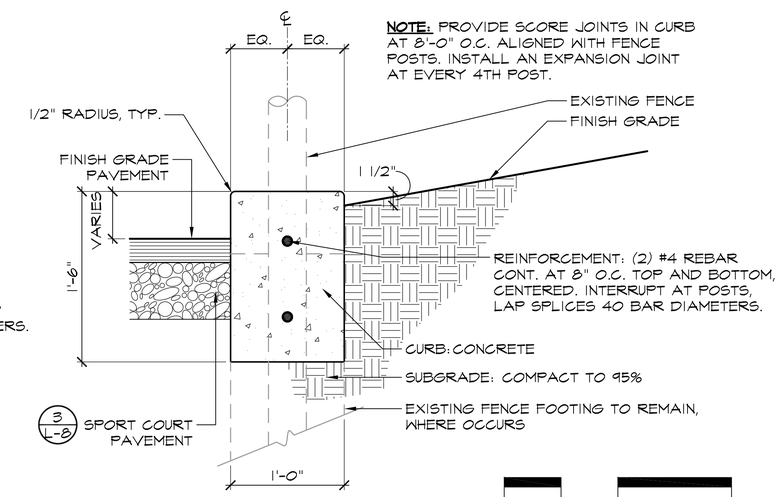

2 L-9 CURB TYPE 2 SECTION

0 1/2' 1' 2'

14044 Concrete Curb 2 8.dwg

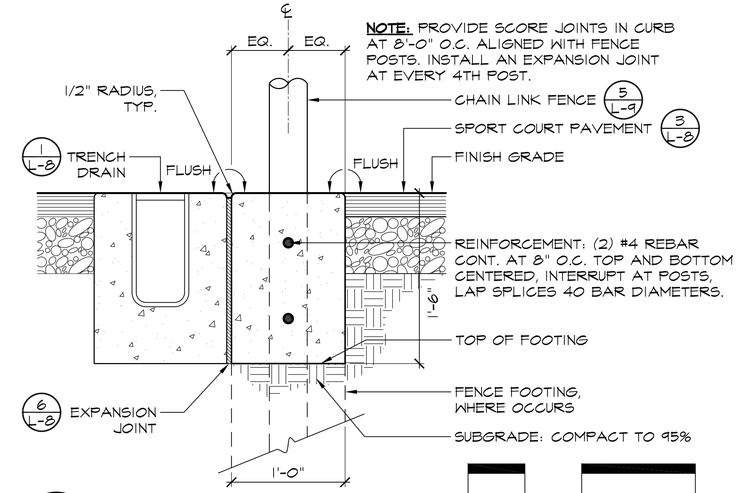

3 L-9 CURB TYPE 3 SECTION

0 1/2' 1' 2'

14044 Concrete Curb 3 8.dwg

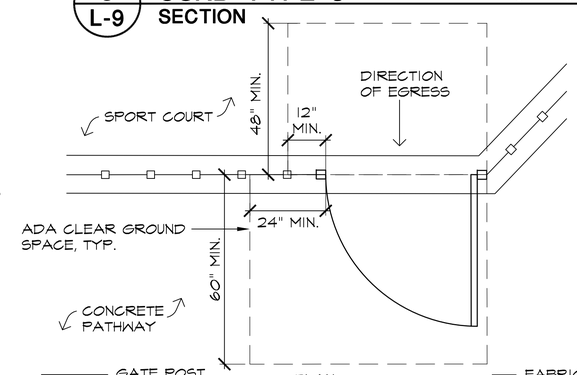

PLAN

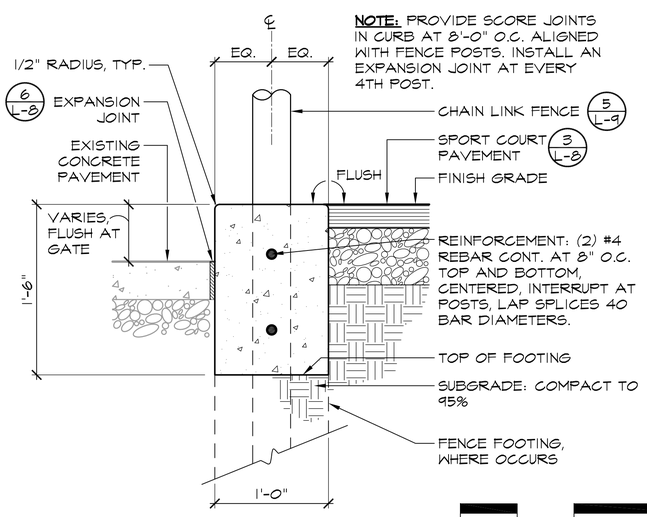

4 L-9 CURB TYPE 4 SECTION

0 1/2' 1' 2'

14044 Concrete Curb 4 8.dwg

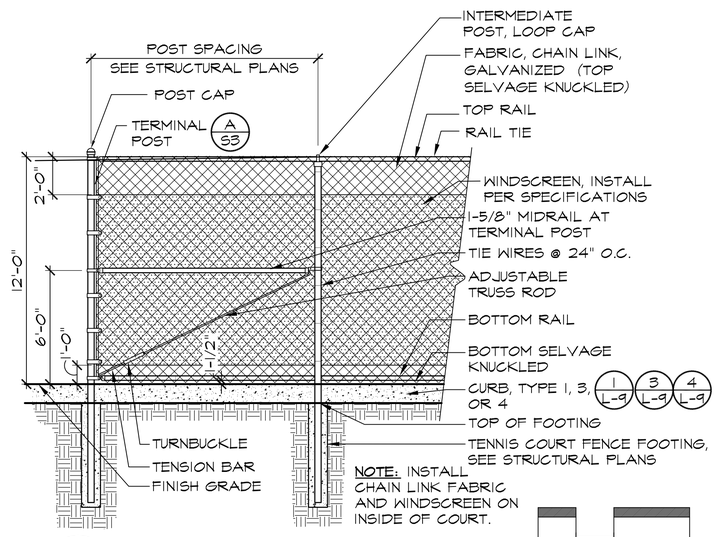

5 L-9 CHAIN LINK FENCE SECTION

0 2' 4' 8'

14044_tennisfence.dwg

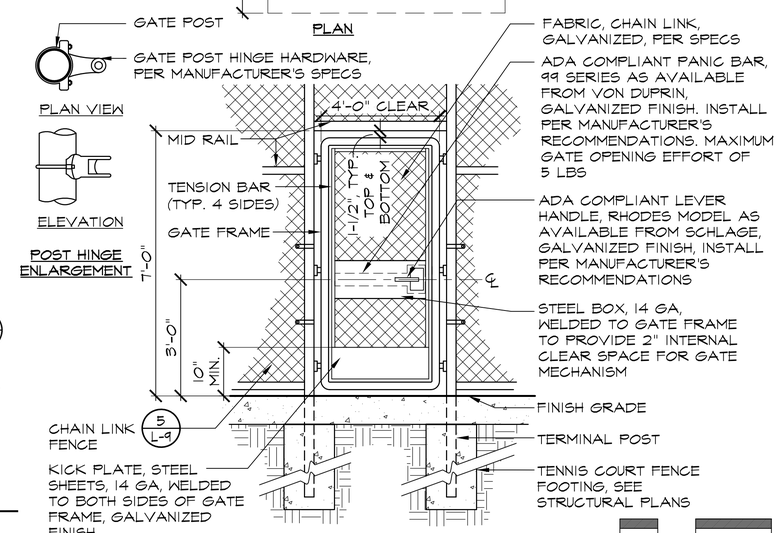

6 L-9 CHAIN LINK GATE SECTION

0 1' 2' 4'

14044 Tennis Court Gate 24.dwg

40 YEARS
Callander Associates
Landscape Architecture

300 South First Street, Ste. 232
San Jose, CA 95113
T 408.275.0565
F 408.275.8047

Revisions

© Copyright 2015
Callander Associates
Landscape Architecture, Inc.

LICENSED LANDSCAPE ARCHITECT
MARK SCHUYLER MCCABE
Signature
Sept. 30, 2016
Renewal Date
Date
STATE OF CALIFORNIA

CONSTRUCTION DETAILS
SPORTS CENTER - WEST COURT RENOVATIONS AND IMPROVEMENTS
21111 Stevens Creek Blvd., Cupertino, CA 95014

Date	5/27/2015
Scale	AS SHOWN
Drawn By	
Checked	
Project No.	14.044
Cadd File	14044dt

Sheet No.
L-9

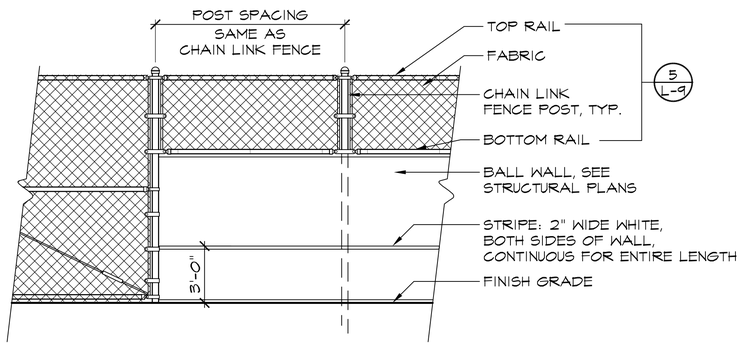

1 / L-10 BALL WALL / CHAIN LINK FENCE INTERFACE
ELEVATION

0 2' 4' 8'

14044_WallFenceInterface_48.dwg

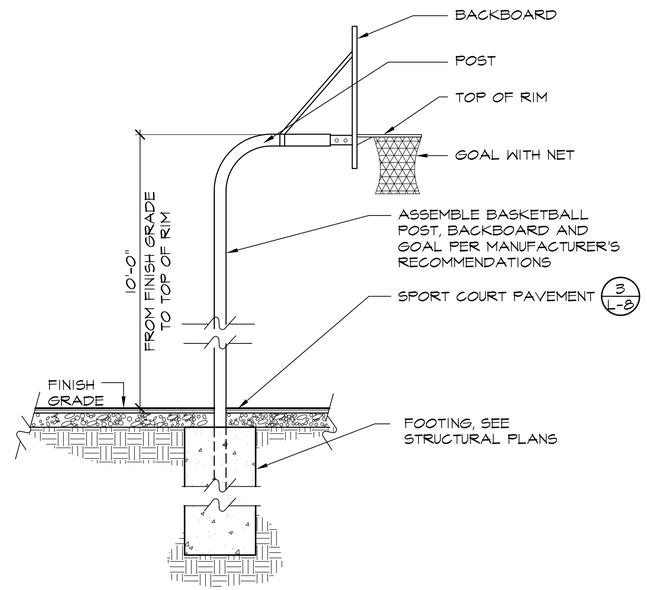

2 / L-10 BASKETBALL STANDARD
SECTION

0 1' 2' 4'

14044_bstandard.dwg

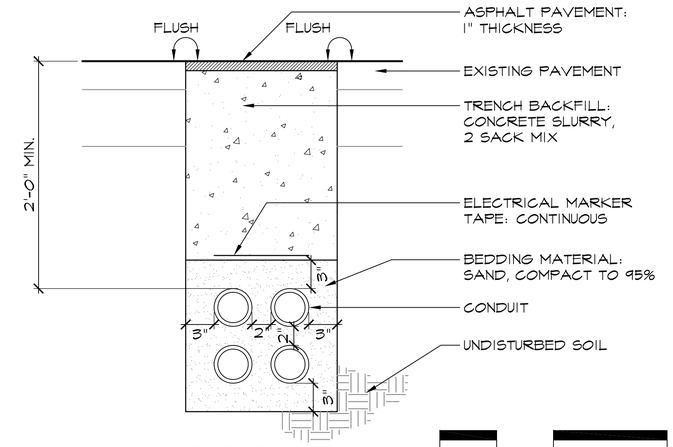

3 / L-10 ASPHALT TRENCH AT ENTRY DRIVE
SECTION

0 1/2' 1' 2'

14044 Asphalt Trench 8.dwg

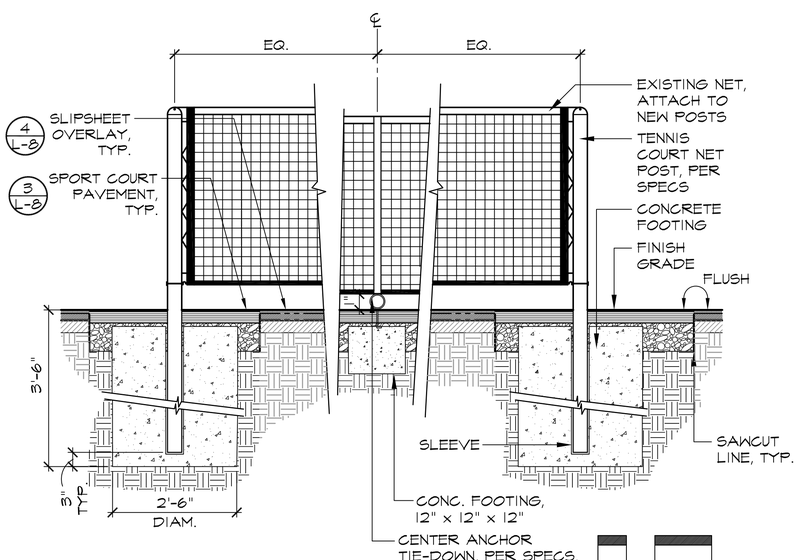

4 / L-10 TENNIS NET AND POST
SECTION

0 1/2' 1' 2'

14044tennisnet.dwg

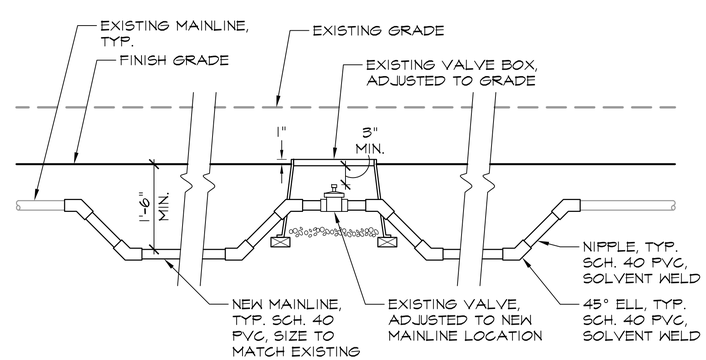

5 / L-10 IRRIGATION MAINLINE ADJUSTMENT
SECTION

0 1/2' 1' 2'

14044 Mainline Adjustment.dwg

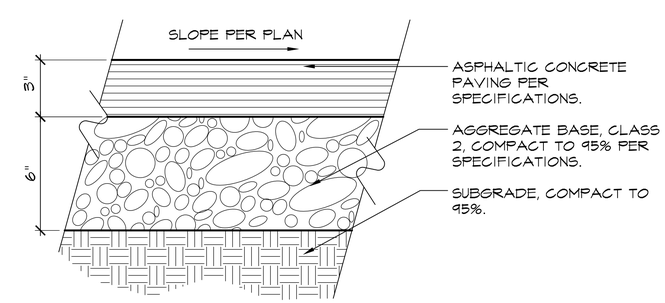

6 / L-10 ASPHALT PAVEMENT
SECTION

0 1/4' 1/2' 1'

02740 Asphalt Pavement 4.dwg

40 YEARS
Callander Associates
Landscape Architecture

300 South First Street, Ste. 232
San Jose, CA 95113
T 408.275.0565
F 408.275.8047

Revisions

© Copyright 2015
Callander Associates
Landscape Architecture, Inc.

LICENSED LANDSCAPE ARCHITECT
MARK SCHNITZER No. 4082
Signature
Sept. 30, 2016
Renewal Date
Date
STATE OF CALIFORNIA

CONSTRUCTION DETAILS
SPORTS CENTER - WEST COURT RENOVATIONS AND IMPROVEMENTS
21111 Stevens Creek Blvd., Cupertino, CA 95014

Date	5/27/2015
Scale	AS SHOWN
Drawn By	
Checked	
Project No.	14.044
Cadd File	14044dt

Sheet No.
L-10

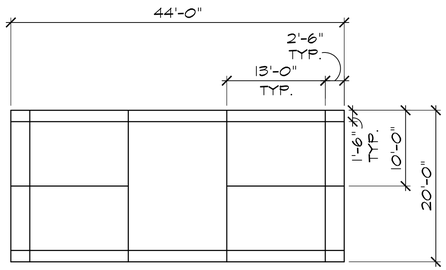

1 / L-11 **BADMINTON COURT STRIPING**
SECTION
0 5' 10' 20'
14044 Court Striping 120.dwg

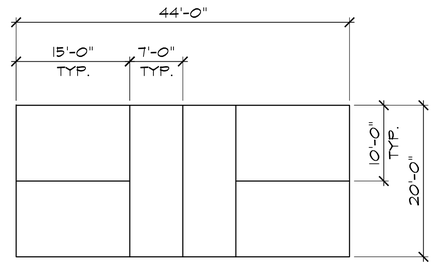

2 / L-11 **PICKLEBALL COURT STRIPING**
SECTION
0 5' 10' 20'
14044 Court Striping 120.dwg

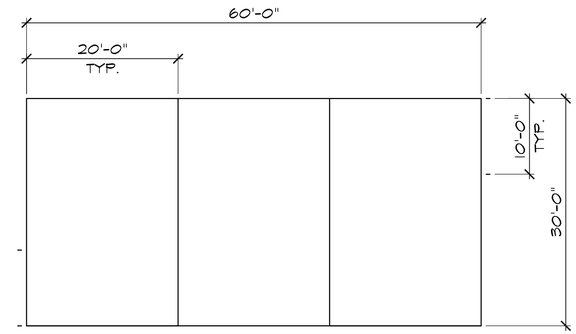

3 / L-11 **VOLLEYBALL COURT STRIPING**
SECTION
0 5' 10' 20'
14044 Court Striping 120.dwg

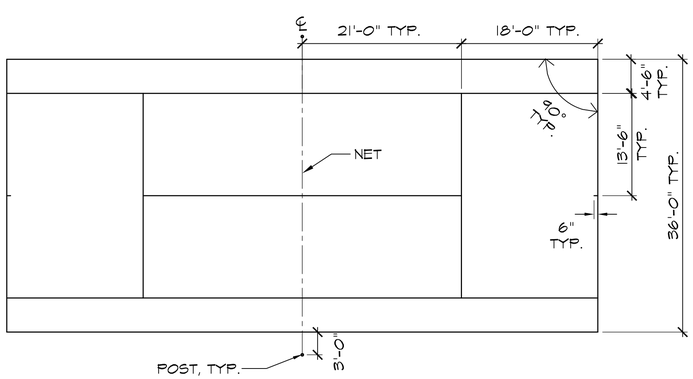

4 / L-11 **TENNIS COURT STRIPING**
SECTION
0 5' 10' 20'
14044 Court Striping 120.dwg

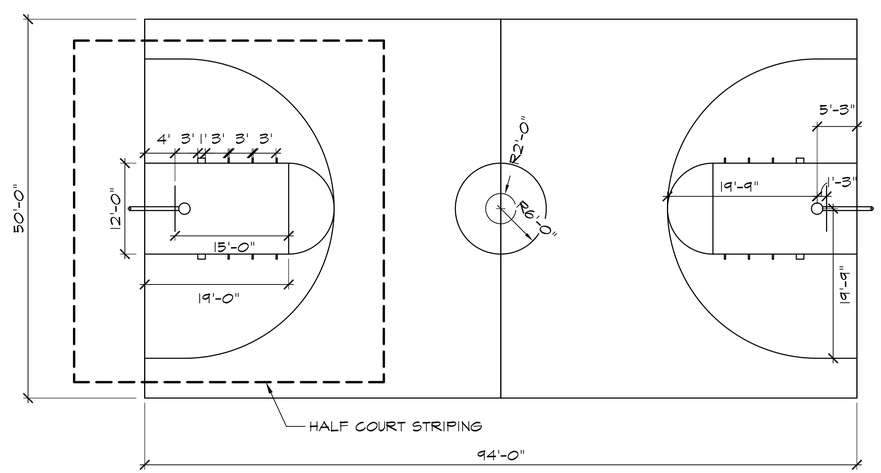

5 / L-11 **BASKETBALL COURT STRIPING**
SECTION
0 5' 10' 20'
14044 Court Striping 120.dwg

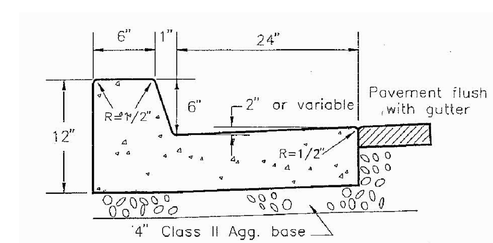

6 / L-11 **CURB AND GUTTER**
CITY STANDARD #A2-6

40 YEARS
Callander Associates
Landscape Architecture
300 South First Street, Ste. 232
San Jose, CA 95113
T 408.275.0565
F 408.275.8047

Revisions

© Copyright 2015
Callander Associates
Landscape Architecture, Inc.

LICENSED LANDSCAPE ARCHITECT
Gary Scientier No. 4001
Signature
Sept. 30, 2016
Renewal Date
Date
STATE OF CALIFORNIA

CONSTRUCTION DETAILS
SPORTS CENTER - WEST COURT RENOVATIONS AND IMPROVEMENTS
21111 Stevens Creek Blvd., Cupertino, CA 95014

Date	5/27/2015
Scale	AS SHOWN
Drawn By	
Checked	
Project No.	14.044
Cadd File	14044dt

Sheet No.
L-11

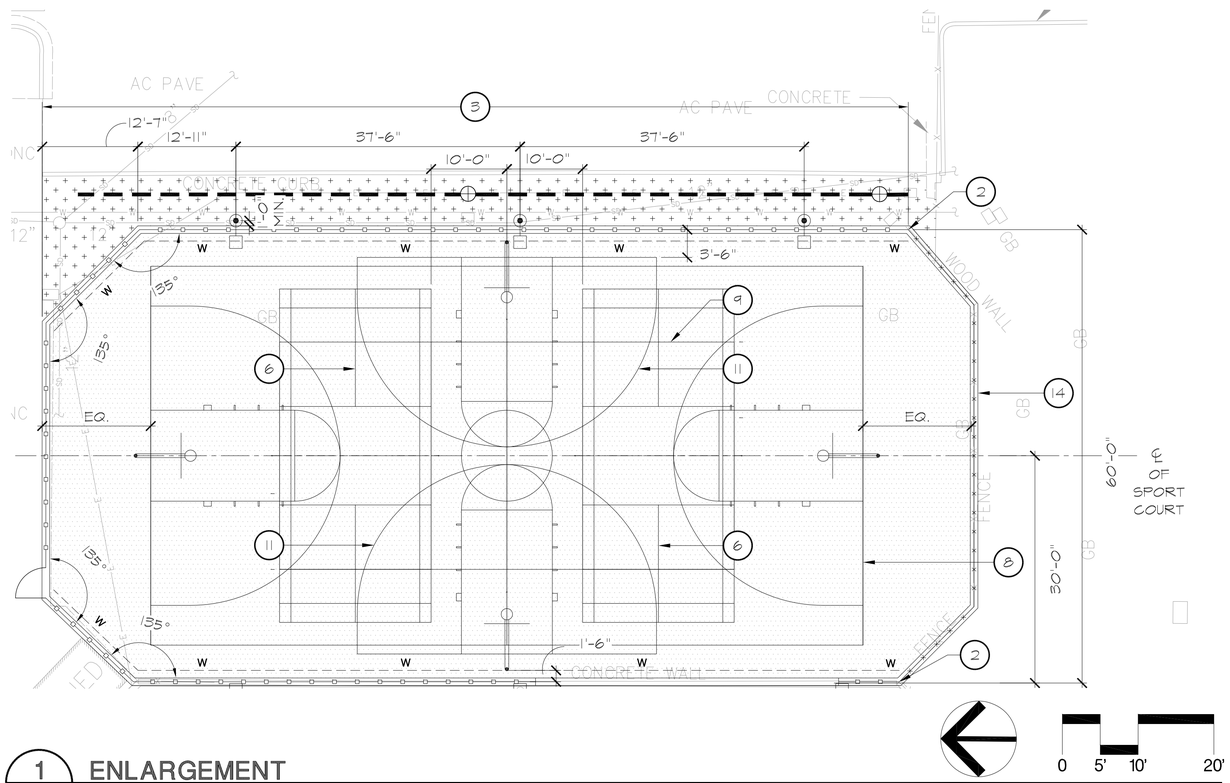

1 L-12 ENLARGEMENT PLAN

FOR SITE CONSTRUCTION NOTES, LEGEND, AND KEY NOTES SEE SHEET L-7

40 YEARS
Callander Associates
Landscape Architecture

300 South First Street, Ste. 232
San Jose, CA 95113
T 408.275.0565
F 408.275.8047

Revisions

© Copyright 2015
Callander Associates
Landscape Architecture, Inc.

LICENSED LANDSCAPE ARCHITECT
GARY ELLENTER No. 4080
Signature
Sept. 30, 2016
Renewal Date
Date
STATE OF CALIFORNIA

ENLARGEMENT PLAN

SPORTS CENTER - WEST COURT
RENOVATIONS AND IMPROVEMENTS
21111 Stevens Creek Blvd., Cupertino, CA 95014

Date	5/27/2015
Scale	AS SHOWN
Drawn By	
Checked	
Project No.	14.044
Cadd File	14044sc

Sheet No.
L-12

TESTING AND SPECIAL INSPECTION

STRUCTURAL SPECIAL INSPECTION AND TESTING

GENERAL

THESE PROVISIONS SHALL GOVERN THE QUALITY, WORKMANSHIP, AND REQUIREMENTS FOR WORK COVERED. MATERIALS OF CONSTRUCTION AND TESTS SHALL CONFORM TO THE APPLICABLE STANDARDS LISTED.

DEFINITIONS

CONTINUOUS SPECIAL INSPECTION: THE FULL–TIME OBSERVATION OF WORK REQUIRING SPECIAL INSPECTION BY AN APPROVED SPECIAL INSPECTOR WHO IS PRESENT IN THE AREA WHERE THE WORK IS BEING PERFORMED.

PERIODIC SPECIAL INSPECTION: THE PART–TIME OR INTERMITTENT OBSERVATION OF WORK REQUIRING SPECIAL INSPECTION BY AN APPROVED SPECIAL INSPECTOR WHO IS PRESENT IN THE AREA WHERE THE WORK HAS BEEN OR IS BEING PERFORMED AND AT THE COMPLETION OF THE WORK.

REFERENCE STANDARDS (EDITIONS ADOPTED BY CURRENT GOVERNING CALIFORNIA BUILDING CODE)

- CBC – CALIFORNIA BUILDING CODE 2013
- ACI 318 – BUILDING CODE REQUIREMENTS FOR STRUCTURAL CONCRETE AND COMMENTARY; AMERICAN CONCRETE INSTITUTE
- ASTM – ASTM INTERNATIONAL

REPORT REQUIREMENTS

SPECIAL INSPECTORS SHALL KEEP RECORDS OF INSPECTIONS, AND SHALL FURNISH INSPECTION REPORTS TO THE BUILDING OFFICIAL AND TO THE REGISTERED DESIGN PROFESSIONAL IN RESPONSIBLE CHARGE. REPORTS SHALL INDICATE THAT THE WORK INSPECTED WAS OR WAS NOT COMPLETED IN CONFORMANCE TO THE APPROVED CONSTRUCTION DOCUMENTS. DISCREPANCIES SHALL BE BROUGHT TO THE IMMEDIATE ATTENTION OF THE CONTRACTOR FOR CORRECTION. IF THEY ARE NOT CORRECTED, THE DISCREPANCIES SHALL BE BROUGHT TO THE ATTENTION OF THE BUILDING OFFICIAL AND TO THE REGISTERED DESIGN PROFESSIONAL IN RESPONSIBLE CHARGE PRIOR TO THE COMPLETION OF THAT PHASE OF THE WORK. A FINAL REPORT DOCUMENTING THE REQUIRED SPECIAL INSPECTIONS AND CORRECTION OF ANY DISCREPANCIES NOTED IN THE INSPECTIONS SHALL BE SUBMITTED AT A POINT IN TIME AGREED UPON PRIOR TO THE START OF THE WORK BY THE PERMIT APPLICANT AND THE BUILDING OFFICIAL.

SCHEDULE OF STRUCTURAL INSPECTION AND TESTING	REFERENCE STANDARDS
CONCRETE	CBC 1704.4, CBC 1704A.4
* CONCRETE	CBC TABLE 1705.3
– REVIEW CERTIFIED MILL TEST REPORTS FOR REINFORCING STEEL	CBC 1705.3
– PERIODICALLY INSPECT REINFORCING STEEL AND PLACEMENT	ACI 318 7.1–7.8, CBC 1705.3
– VERIFY USE OF ENGINEER OF RECORD REVIEWED MIX DESIGN AND MATERIAL CERTIFICATE	ACI 318 5.2–5.4
– CONTINUOUSLY INSPECT CONCRETE PLACEMENT	
– PERIODICALLY INSPECT CURING MATERIAL FOR CONFORMANCE WITH APPROVED CONTRACT DOCUMENTS AND PLACEMENT	
– PERIODICALLY INSPECT FORMWORK FOR SHAPE, LOCATION AND DIMENSIONS	
– FABRICATE 6" DIAMETER X 12" CYLINDER TEST SPECIMENS	ACI 318 5.6, ASTM C31
– PERFORM SLUMP TESTING AT THE TIME CONCRETE IS SAMPLED	ASTM C143
– PERFORM AIR CONTENT TESTING AT THE TIME CONCRETE IS SAMPLED	ASTM C173
– RECORD TEMPERATURE OF CONCRETE AT THE TIME CONCRETE IS SAMPLED	ASTM C1064
– PERFORM CONCRETE COMPRESSION TESTING	ASTM C39
POST–INSTALLED ANCHORS AND DOWELS	
* ADHESIVE ANCHORS IN CONCRETE OR REINFORCED MASONRY	
– INSPECT ANCHOR TYPE, DIAMETER, LENGTH AND CLEANLINESS	
– INSPECT ADHESIVE PRODUCT NAME AND EXPIRATION	
– INSPECT HOLE LOCATION, DIAMETER, DEPTH AND CLEANLINESS	
– INSPECT ANCHOR EMBEDMENT, SPACING AND EDGE DISTANCE	
– CONTINUOUSLY INSPECT SUBSTRATE TEMPERATURE AT TIME OF INSTALLATION	
– CONTINUOUSLY INSPECT ADHESIVE AND ANCHOR INSTALLATION PER ICC/IAPMO EVALUATION REPORT	
* SCREW ANCHORS IN CONCRETE (SIMPSON TITEN HD & TITEN HD MINI)	
– INSPECT ANCHOR TYPE, DIAMETER, LENGTH AND CLEANLINESS	
– INSPECT HOLE LOCATION, DIAMETER, DEPTH AND CLEANLINESS	
– INSPECT ANCHOR EMBEDMENT, SPACING & EDGE DISTANCE	
– CONTINUOUSLY INSPECT ANCHOR INSTALLATION PER ICC/IAPMO EXCAVATION REPORT	
– VERIFY MAXIMUM IMPACT WRENCH TORQUE RATING	
NONSHRINK/EXPANSIVE GROUT	
– CONFIRM MATERIALS COMPLY TO SPECIFICATIONS	
– CONTINUOUSLY INSPECT INSTALLATION	
– FABRICATE TESTING SAMPLES	ASTM C109
– PERFORM COMPRESSION TESTING	ASTM C109
CAST–IN–PLACE DEEP FOUNDATION ELEMENTS	CBC TABLE 1705.8
– VERIFY DENSITY OF SUBGRADE & BASEROCK AND PERFORM ADDITIONAL INSPECTIONS AS REQUIRED BY GEOTECHNICAL ENGINEER AND PER APPROVED GEOTECHNICAL REPORT.	

GENERAL NOTES

STRUCTURAL OBSERVATION

THE ENGINEER RESPONSIBLE FOR THE DESIGN SHALL PERFORM STRUCTURAL OBSERVATION AS DEFINED IN SECTION 1710.2 CONDITION 4 OF THE CALIFORNIA BUILDING CODE. OBSERVED DEFICIENCIES SHALL BE REPORTED IN WRITING TO THE OWNER'S REPRESENTATIVE, SPECIAL INSPECTOR, AND CONTRACTOR. THE STRUCTURAL OBSERVER SHALL SUBMIT TO THE CITY OFFICIAL A WRITTEN STATEMENT THAT THE SITE VISITS HAVE BEEN MADE AND IDENTIFY ANY REPORTED DEFICIENCIES WHICH, TO THE BEST OF THE STRUCTURAL OBSERVER'S KNOWLEDGE, HAVE NOT BEEN RESOLVED. THE CONTRACTOR SHALL SUBMIT AN UPDATED CONSTRUCTION SCHEDULE TO THE STRUCTURAL ENGINEER WEEKLY. THE SCHEDULE SHALL SHOW PROJECTED WORK TO BE PERFORMED OVER THE FOLLOWING THREE WEEKS. THE CITY OF CUPERTINO REQUIRES THE FOLLOWING STAGES OF CONSTRUCTION OBSERVED AND STRUCTURE SHALL REMAIN EXPOSED AND ACCESSIBLE UNTIL THE STRUCTURAL ENGINEER OR THE STRUCTURAL ENGINEER'S DESIGNATED REPRESENTATIVE HAS REVIEWED THEM FOR CORRECTNESS AND QUALITY OF WORKMANSHIP.

FOUNDATION:
- AFTER DRILLING PIERS
- AFTER PLACEMENT OF DRILLED PIER REINFORCING
- AFTER COMPLETION OF WOOD FRAMING, PRIOR TO INSTALLATION OF PLYWOOD

OTHER ITEMS NOT LISTED ABOVE MAY BE DETERMINED BY THE ENGINEER DURING CONSTRUCTION AS REQUIRING STRUCTURAL OBSERVATION.

NOTES: THE CONTRACTOR SHALL NOTIFY THE ENGINEER AT LEAST 2 WORKING DAYS PRIOR TO COVERING UP ABOVE ITEMS OF CONSTRUCTION.

PROJECT DATA

1. SCOPE OF WORK:
   THE WORK SHOWN ON THESE DAWINGS IS LIMITED TO THE FOLLOWING:
   - INSTALL WOOD FRAMED WALL DIRECTLY IN FRONT OF EXISTING CONCRETE RETAINING WALL/SCREEN WALL.
   - STRUCTURAL DETAILS FOR LIGHT POLES, BASKETBALL HOOPS, BALL WALL & FENCING AT NEW SPORT COURT.
2. PLANS AND CALCULATIONS FOR THE STRUCTURAL DESIGN WERE BASED UPON:
   - THE 2013 CALIFORNIA BUILDING CODE.
   - SOILS REPORT BY GeoForensics, Inc., DATED JULY 2, 2014.
3. DESIGN LOADS ARE AS FOLLOWS:

LATERAL		
WIND	PER ASCE 7–10	110 MPH BASIC WIND SPEED (3 SECOND GUST) WIND IMPORTANCE FACTOR, I = 1.0 OCCUPANCY CATEGORY II EXPOSURE CATEGORY B FORCE COEFFICIENT, C_F = 1.3
SEISMIC	PER ASCE 7–10	OCCUPANCY CATEGORY II SEISMIC IMPORTANCE FACTOR, I = 1.0 S_{DS} = 1.297 F_P = 0.4 WP

DRAWING INDEX

S1 STRUCTURAL NOTES & SPECIAL INSPECTION
S2 WALL FACING ELEVATION & DETAILS
S3 SPORT COURT SECTIONS & DETAILS

CONSTRUCTION NOTES

CONSTRUCTION NOTES

1. THIS GENERAL CONTRACTOR & SUB–CONTRACTOR SHALL HAVE A MINIMUM OF 5 YEARS OF DOCUMENTED EXPERIENCE FOR THIS TYPE OF CONSTRUCTION.
2. CONTRACTOR TO FIELD VERIFY ALL EXISTING CONDITIONS PRIOR TO COMMENCING THE WORK. ANY DISCREPANCY IN THE CONTRACT DOCUMENTS WITH RESPECT TO EXISTING FIELD CONDITIONS SHALL BE REPORTED TO THE CITY AND RESOLVE PRIOR TO PROCEEDING WITH THE WORK IN THE AREA.
3. PROVIDE, ERECT, MAINTAIN AND REMOVE TEMPORARY BARRIERS, SECURITY DEVICES, LIGHTS, WEATHER PROTECTION, WARNING SIGNS AND OTHER ITEMS AS REQUIRED FOR PROTECTION OF WORKMEN ENGAGED IN THE CONSTRUCTION, THE STAFF AND THE PUBLIC.
4. CONDUCT CONSTRUCTION TO MINIMIZE IMPACT TO AND INTERFERENCE WITH THE CENTER'S OPERATION.
5. DO NOT CLOSE OR OBSTRUCT SIDEWALKS OR WALKWAYS WITHOUT APPROVAL OF CITY.
6. CONTRACTOR SHALL NOT OBSTRUCT THE PUBLIC ENTRANCES AND EXITS AT ANY TIME. PROTECT PERSONS USING ENTRANCES AND EXITS FROM THE CONSTRUCTION.
7. CONTRACTOR SHALL REMOVE, STORE, AND REINSTALL CHAIN LINK FENCING AS REQUIRED TO PERFORM THE CONSTRUCTION.
8. ALL EXCAVATED MATERIAL NOT TO BE REUSED SHALL BE REMOVED FROM SITE ON A DAILY BASIS.
9. THE PREMISES SHALL BE KEPT CLEAN AND IN A SAFE CONDITION. REMOVE DEBRIS AND TRASH FROM THE SITE ON A DAILY BASIS.
9. CONTRACTOR SHALL LOCATE AND PROTECT ALL EXISTING UTILITY LINES, SPRINKLER LINES, AND LANDSCAPING.
10. ALL CONSTRUCTION SHALL BE PERFORMED SO AS TO NOT DAMAGE ANY EXISTING STRUCTURE, FINISHES, PROPERTY OR SERVICES TO REMAIN. THE CONTRACTOR SHALL REPAIR OR REPLACE ANY DAMAGE WHICH OCCURRED DURING THE CONSTRUCTION AT NO ADDITIONAL COST AND AS DIRECTED BY THE CITY.

REGISTERED PROFESSIONAL ENGINEER
ADAM T. NYE
No. S4823
Exp. 9/30/15
STRUCTURAL
STATE OF CALIFORNIA

ONLY THE MOST CURRENT WET SIGNED DOCUMENTS CONSTITUTE THE PROFESSIONAL WORK OF BIGGS CARDOSA ASSOCIATES, INC. IF THERE ARE ANY DIFFERENCES BETWEEN THE MOST CURRENT WET SIGNED DOCUMENTS AND EARLIER OR NOT WET SIGNED VERSIONS OF THE DOCUMENTS, THE MOST CURRENT WET SIGNED DOCUMENTS SHALL GOVERN. BIGGS CARDOSA ASSOCIATES, INC. IS NOT RESPONSIBLE FOR ANY MODIFICATIONS MADE TO OUR DOCUMENTS BY ANYONE OTHER THAN THE ENGINEER OF RECORD FOR BIGGS CARDOSA ASSOCIATES, INC.

40 YEARS
Callander Associates Landscape Architecture
300 South First Street, Ste. 232
San Jose, CA 95113
T 408.275.0565
F 408.275.8047

Revisions

BIGGS CARDOSA ASSOCIATES INC
STRUCTURAL ENGINEERS
865 The Alameda
San Jose, California 95126
408–296–5515

STRUCTURAL NOTES & SPECIAL INSPECTION
Sports Center–West Court
Renovations and Improvements
21111 Stevens Creek Blvd., Cupertino, CA 95014

Date	5/27/15
Scale	AS SHOWN
Drawn By	RLQ
Checked	DJF
Project No.	2014143
Cadd File	2014142S1

Sheet No.
S1

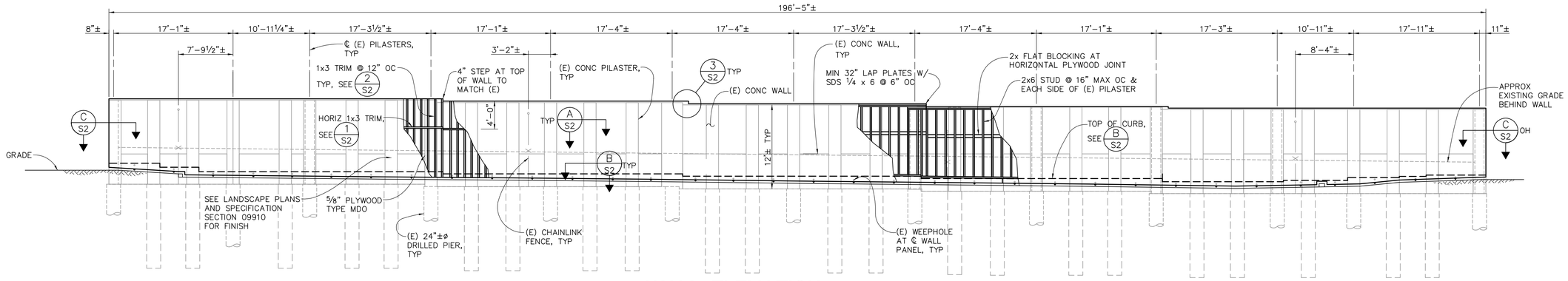

WALL ELEVATION

0 1' 4' 10'

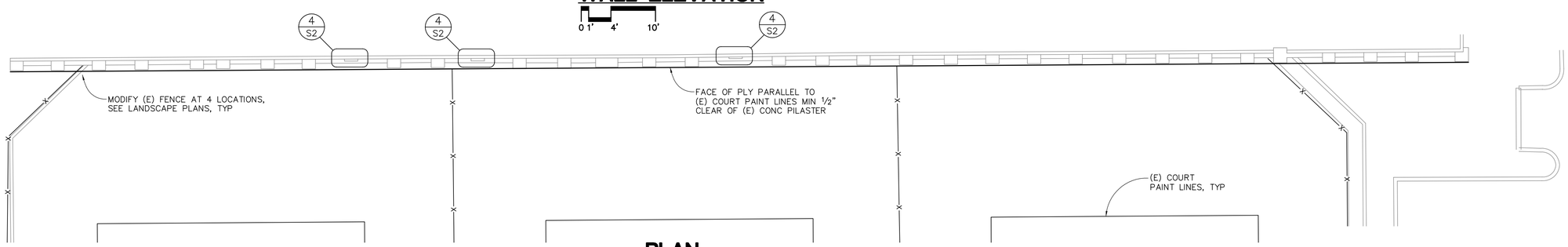

PLAN

0 1' 4' 10'

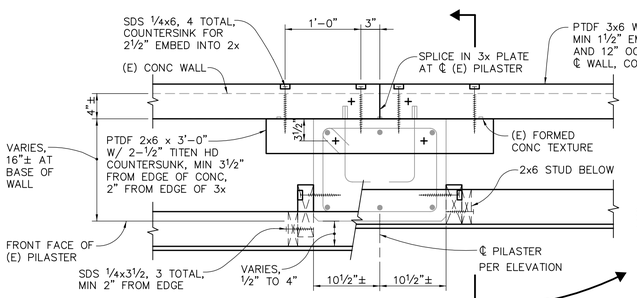

SECTION A/S2

0 3" 6" 1'

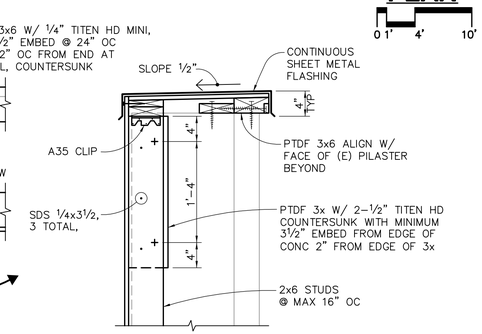

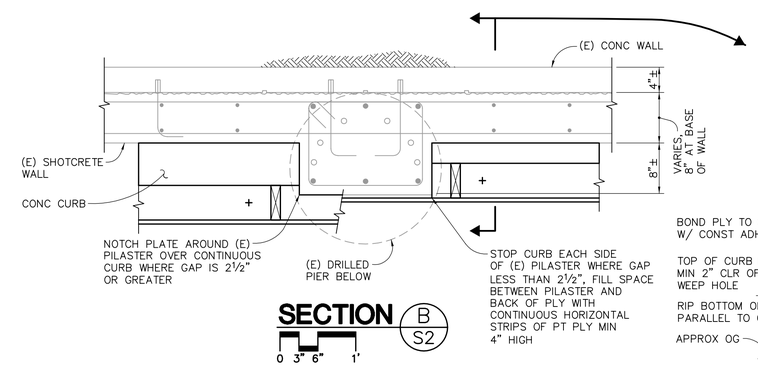

SECTION B/S2

0 3" 6" 1'

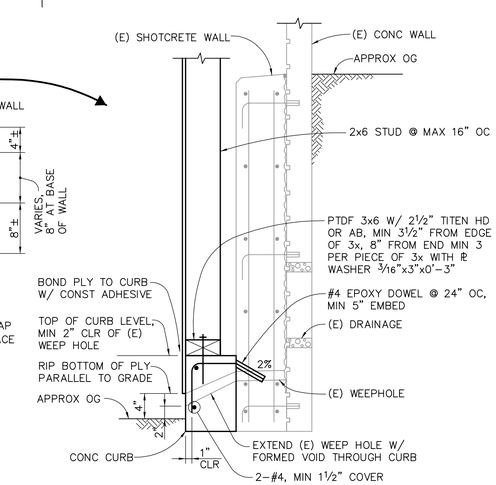

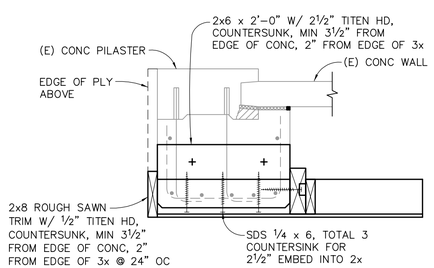

SECTION C/S2

0 3" 6" 1'

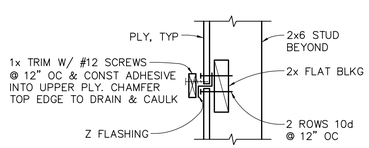

TYP HORIZ PLY JOINT 1/S2

0 1½" 3" 6" 1'

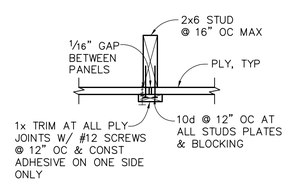

TYP VERT PLY JOINT 2/S2

0 1½" 3" 6" 1'

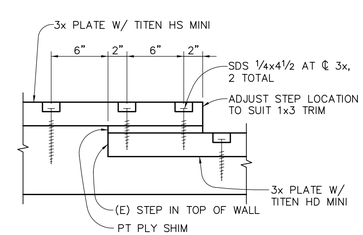

DETAIL 3/S2

0 1½" 3" 6" 1'

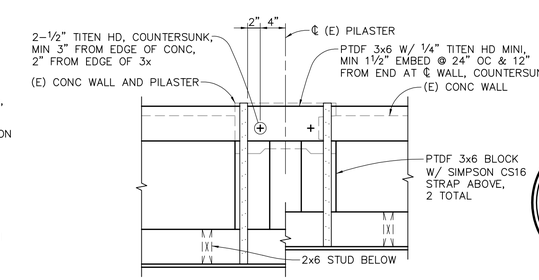

DETAIL 4/S2

0 3" 6" 1'

REGISTERED PROFESSIONAL ENGINEER ADAM T. NYE No. S3823 Exp. 9/30/15 STRUCTURAL STATE OF CALIFORNIA

ONLY THE MOST CURRENT WET SIGNED DOCUMENTS CONSTITUTE THE PROFESSIONAL WORK OF BIGGS CARDOSA ASSOCIATES, INC. IF THERE ARE ANY DIFFERENCES BETWEEN THE MOST CURRENT WET SIGNED DOCUMENTS AND EARLIER OR NOT WET SIGNED VERSIONS OF THE DOCUMENTS, THE MOST CURRENT WET SIGNED DOCUMENTS SHALL GOVERN. BIGGS CARDOSA ASSOCIATES, INC. IS NOT RESPONSIBLE FOR ANY MODIFICATIONS MADE TO OUR DOCUMENTS BY ANYONE OTHER THAN THE ENGINEER OF RECORD FOR BIGGS CARDOSA ASSOCIATES, INC.

40 YEARS
Callander Associates Landscape Architecture
300 South First Street, Ste. 232
San Jose, CA 95113
T 408.275.0565
F 408.275.8047

Revisions

BIGGS CARDOSA ASSOCIATES INC
STRUCTURAL ENGINEERS
865 The Alameda
San Jose, California 95126
408-296-5515

WALL FACING ELEVATION & DETAILS

Sports Center-West Court Renovations and Improvements
21111 Stevens Creek Blvd., Cupertino, CA 95014

Date	5/27/15
Scale	AS SHOWN
Drawn By	RLQ
Checked	DJF
Project No.	2014143
Cadd File	2014142S2

Sheet No. S2

(2014143S2) 2014143

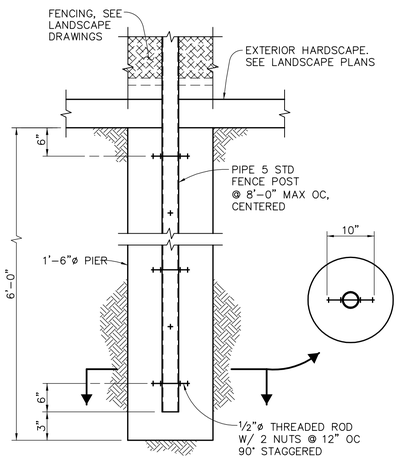

CHAIN LINK FENCING POST (A/S3)

0 2" 6" 1' 2'

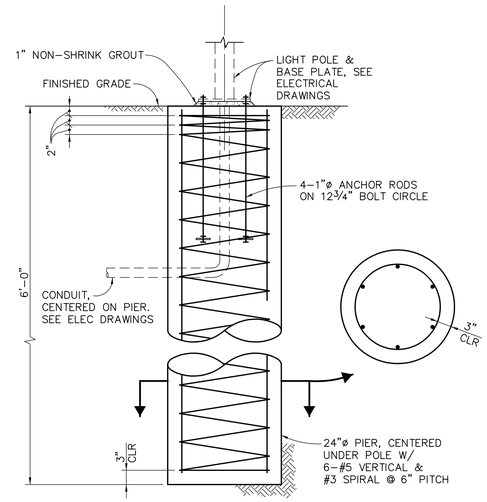

LIGHT POLE FOUNDATION (B/S3)

0 2" 6" 1' 2'

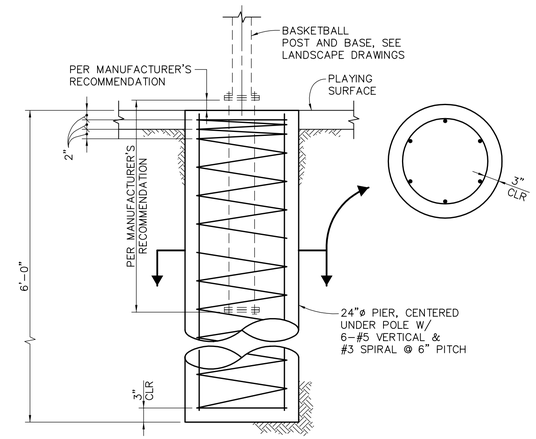

BASKETBALL POLE FOUNDATION (C/S3)

0 2" 6" 1' 2'

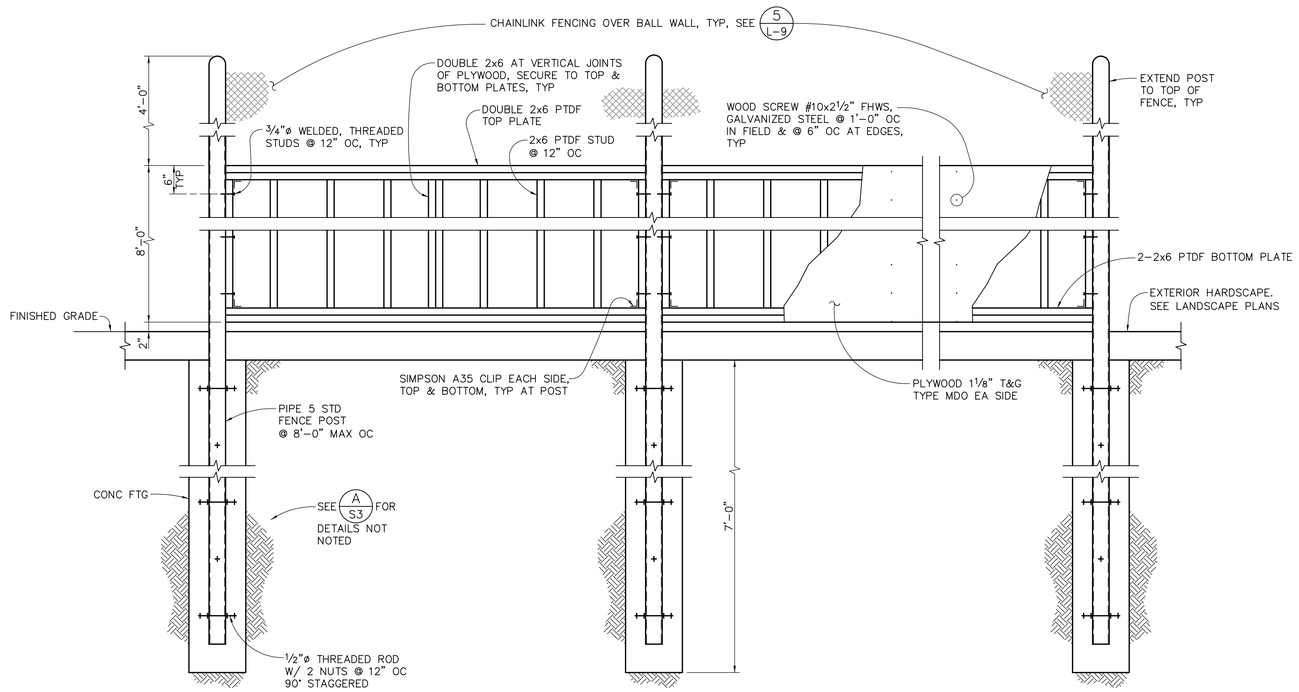

BALL WALL (D/S3)

0 2" 6" 1' 2'

Callander Associates Landscape Architecture
300 South First Street, Ste. 232
San Jose, CA 95113
T 408.275.0565
F 408.275.8047

Revisions

BIGGS CARDOSA ASSOCIATES INC
STRUCTURAL ENGINEERS
865 The Alameda
San Jose, California 95126
408-296-5515

SPORT COURT SECTIONS & DETAILS

Sports Center-West Court
Renovations and Improvements
21111 Stevens Creek Blvd., Cupertino, CA 95014

ONLY THE MOST CURRENT WET SIGNED DOCUMENTS CONSTITUTE THE PROFESSIONAL WORK OF BIGGS CARDOSA ASSOCIATES, INC. IF THERE ARE ANY DIFFERENCES BETWEEN THE MOST CURRENT WET SIGNED DOCUMENTS AND EARLIER OR NOT WET SIGNED VERSIONS OF THE DOCUMENTS, THE MOST CURRENT WET SIGNED DOCUMENTS SHALL GOVERN. BIGGS CARDOSA ASSOCIATES, INC. IS NOT RESPONSIBLE FOR ANY MODIFICATIONS MADE TO OUR DOCUMENTS BY ANYONE OTHER THAN THE ENGINEER OF RECORD FOR BIGGS CARDOSA ASSOCIATES, INC.

Date	5/27/15
Scale	AS SHOWN
Drawn By	RLQ
Checked	DJF
Project No.	2014143
Cadd File	2014142S3

Sheet No.
S3

(2014143S3) 2014143

LEGEND

A-1 — HOMERUN CONDUIT AND CONDUCTORS TO PANEL 'A' CIRCUIT 1; SLASH MARKS INDICATE NUMBER OF CONDUCTORS, 2 #10 AWG + 1 #10 GND, UON

CIRCUIT RUN UNDERGROUND

CONDUIT CONTINUED

CONDUIT STUBBED TO POINT INDICATED AND CAPPED FOR FUTURE USE

PB — PULLBOX

PANELBOARD, SURFACE OR RECESSED

SERVICE SWITCHBOARD

PEDESTAL

F1 — LIGHT FIXTURE TAG, FIXTURE TYPE F1

ELECTRICAL APPARATUS AND EQUIPMENT

SAFETY DISCONNECT SWITCH, FUSED AND NON-FUSED

FAN OUTLET

M — MOTOR OUTLET

MOTOR STARTER: STARTER ONLY, COMBINATION TYPE

MANUAL MOTOR STARTER, HP RATED

FUSE

THERMAL ELEMENT

M — METER

CIRCUIT BREAKER

GROUND TO EARTH

SWITCH

CONTACTS, NORMALLY OPEN, NORMALLY CLOSED

MC — MAGNETIC CONTACTOR

TRANSFORMER, SINGLE OR THREE PHASE, SINGLE LINE

M — CURRENT TRANSFORMER WITH UTILITY METER & SOCKET

WP — WEATHERPROOF RECEPTACLE

ABBREVIATIONS

C	CONDUIT
CO	CONDUIT ONLY
E	EXISTING TO REMAIN
GFCI	GROUND FAULT CIRCUIT INTERRUPTER
GND	GROUND
HPS	HIGH PRESSURE SODIUM
JP	JOINT POLE
MH	METAL HALIDE
N	NEW
NL	NIGHT LIGHT
PE	PHOTOELECTRIC
R	EXISTING TO BE REMOVED
RL	RELOCATED EXISTING
SWBD	SWITCHBOARD
TS	TIME SWITCH
UIO	UNLESS INDICATED OTHERWISE
UON	UNLESS OTHERWISE NOTED
V	VOLT
W	WATT
WP	WEATHERPROOF
XFMR	TRANSFORMER

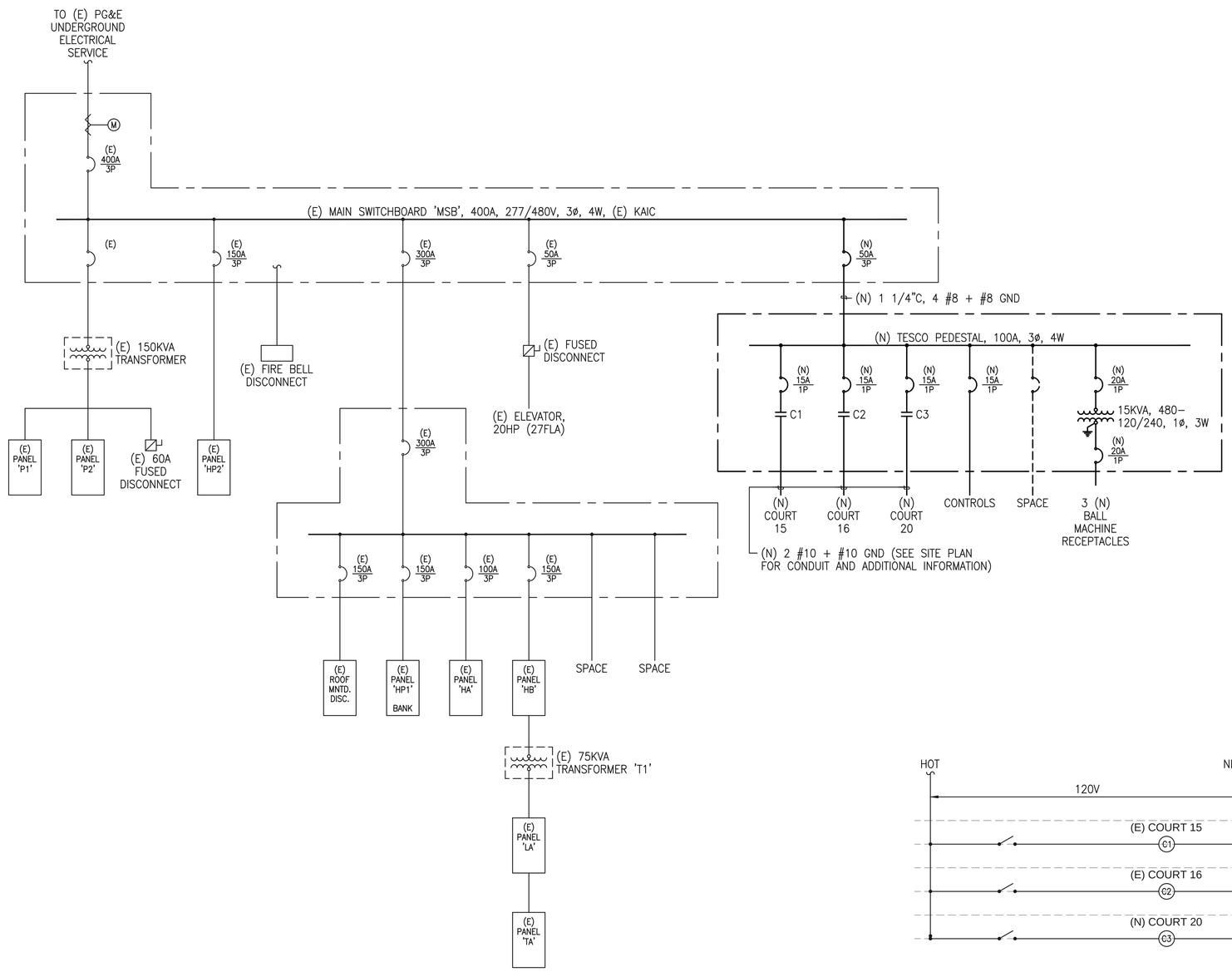

1 SINGLE LINE DIAGRAM
SCALE: NONE

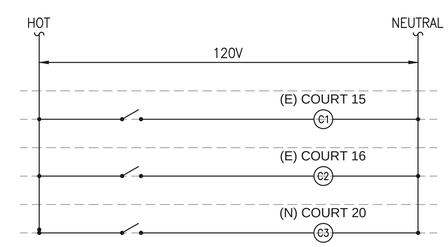

2 LIGHTING CONTROL DIAGRAM
SCALE: NONE

ZEIGER ENGINEERS, INC.
ELECTRICAL CONSULTANTS
478 3RD STREET
OAKLAND, CA 94607
TEL (510) 452-9391
FAX (510) 452-0661

REGISTERED PROFESSIONAL ENGINEER
Oscar Tune Louie
NO. E9648
EXP. 9/30/15
Electrical
STATE OF CALIFORNIA

05/27/2015
DATE SIGNED

40 YEARS
Callander Associates
Landscape Architecture
300 South First Street, Ste. 232
San Jose, CA 95113
T 408.275.0565
F 408.275.8047

Revisions

© Copyright 2015
Callander Associates
Landscape Architecture, Inc.

LEGEND, SINGLE LINE & LIGHTING CONTROL DIAGRAMS

SPORTS CENTER - WEST COURT RENOVATIONS AND IMPROVEMENTS
21111 Stevens Creek Blvd., Cupertino, CA 95014

Date	5/27/2015
Scale	AS SHOWN
Drawn By	EDR
Checked	OTL
Project No.	3915
Cadd File	

Sheet No.
E-1

3915 6/2/15

REFER TO STRUCTURAL DRAWINGS FOR ADDITIONAL INFORMATION.

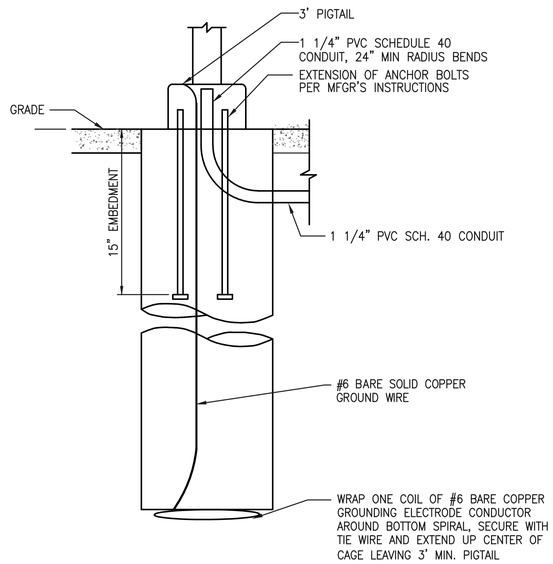

1 TENNIS COURT FOUNDATION DETAIL (GRADE)
SCALE: NONE

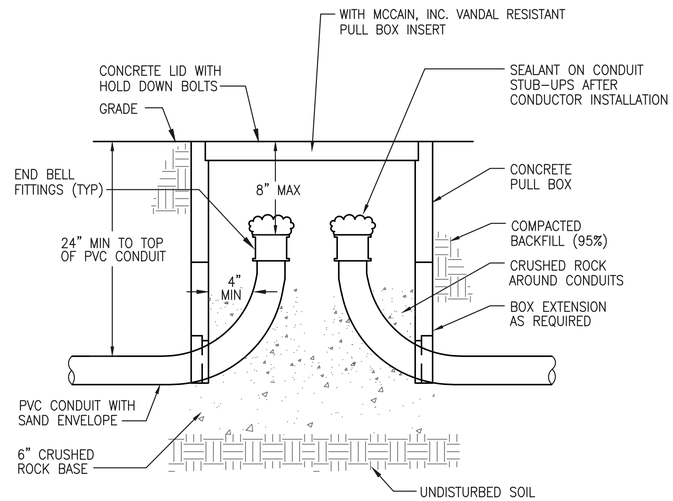

2 PULLBOX DETAIL
SCALE: NONE

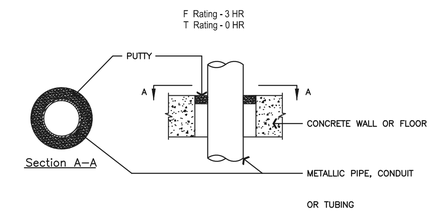

NOTES:

Fill, Void or Cavity Material* – Putty – Moldable putty material kneaded by hand and applied to fill annular space (and interstices between cables to max. extent possible) to a min. depth of 1 in., flush with top surface of floor or sleeve in wall assemblies, required putty depth to be installed symmetrically on both sides of wall.

* Bearing the UL Classification Marking.

3 PENETRATION THROUGH CONCRETE WALL OR FLOOR ASSEMBLY
SCALE: NONE

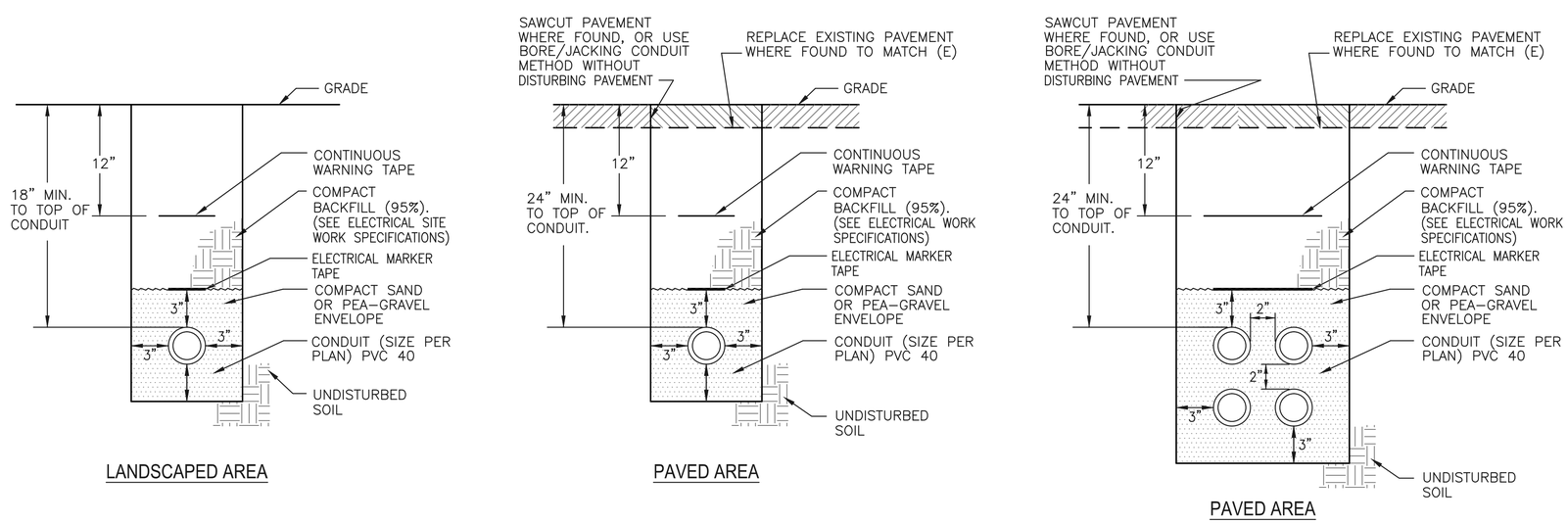

NOTE: THESE DETAILS APPLY TO SECONDARY POWER AND SIGNAL SYSTEM TRENCHES ONLY. REFER TO PG&E FOR PRIMARY POWER TRENCH REQUIREMENTS.

4 TYPICAL TRENCH DETAILS
SCALE: NONE
COORDINATE WITH DETAIL 3 ON SHEET L-10.

ZEIGER ENGINEERS, INC.
ELECTRICAL CONSULTANTS
478 3RD STREET
OAKLAND, CA 94607
TEL (510) 452-9391
FAX (510) 452-0661

REGISTERED PROFESSIONAL ENGINEER
Oscar Tune Louie
NO. E9644
EXP. 9/30/16
Electrical
STATE OF CALIFORNIA

05/27/2015
DATE SIGNED

40 YEARS
Callander Associates
Landscape Architecture
300 South First Street, Ste. 232
San Jose, CA 95113
T 408.275.0565
F 408.275.8047

Revisions

© Copyright 2015
Callander Associates
Landscape Architecture, Inc.

ELECTRICAL DETAILS

SPORTS CENTER - WEST COURT RENOVATIONS AND IMPROVEMENTS
21111 Stevens Creek Blvd, Cupertino, CA 95014

Date	5/27/2015
Scale	AS SHOWN
Drawn By	EDR
Checked	OTL
Project No.	3915
Cadd File	

Sheet No.
E-2

3915 6/2/15

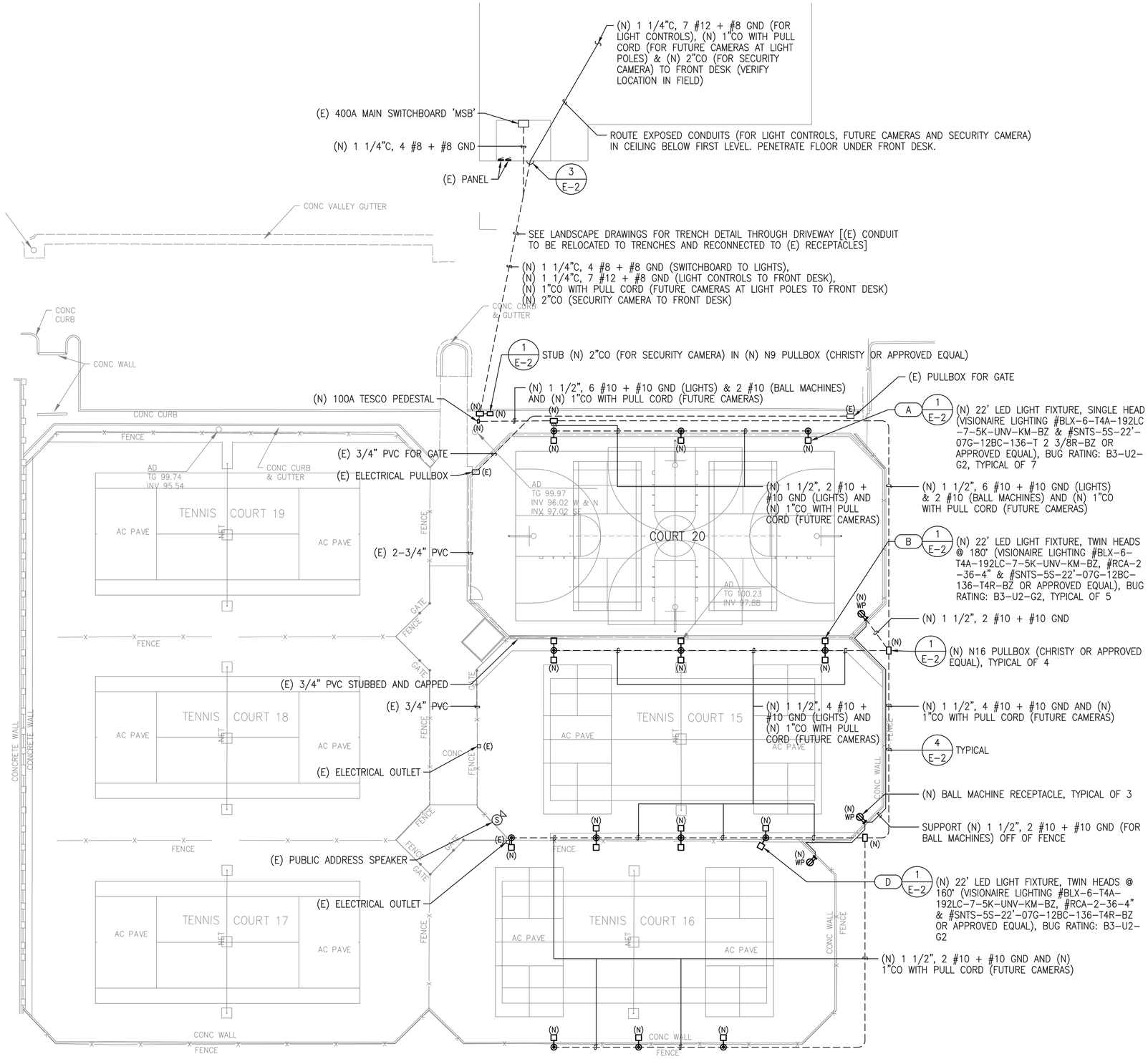

GENERAL NOTE:

REFER TO STRUCTURAL ENGINEER'S DRAWINGS FOR LIGHT POLE FOOTINGS.

ZEIGER ENGINEERS, INC.
ELECTRICAL CONSULTANTS
478 3RD STREET
OAKLAND, CA 94607
TEL (510) 452-9391
FAX (510) 452-0661

REGISTERED PROFESSIONAL ENGINEER
Oscar Tune Louie
NO. E9644
EXP. 9/30/16
Electrical
STATE OF CALIFORNIA

05/27/2015
DATE SIGNED

40 YEARS
Callander Associates
Landscape Architecture
300 South First Street, Ste. 232
San Jose, CA 95113
T 408.275.0565
F 408.275.8047

Revisions

© Copyright 2015
Callander Associates
Landscape Architecture, Inc.

SITE ELECTRICAL PLAN

SPORTS CENTER - WEST COURT RENOVATIONS AND IMPROVEMENTS

21111 Stevens Creek Blvd., Cupertino, CA 95014

Date	5/27/2015
Scale	AS SHOWN
Drawn By	EDR
Checked	OTL
Project No.	3915
Cadd File	

Sheet No.
E-3

3915 6/2/15