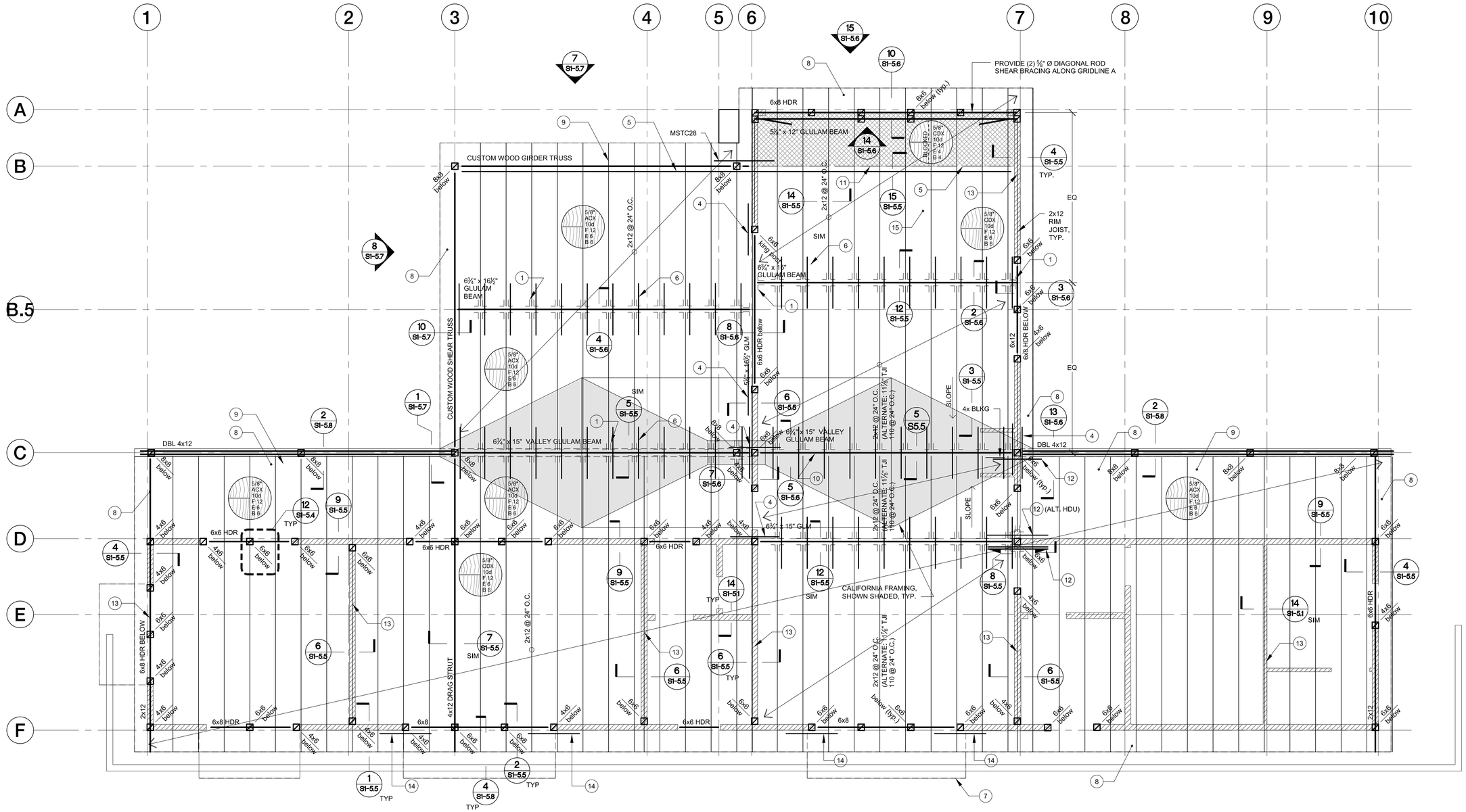

FRAMING NOTES:

1. All exterior walls and shear walls shall be 2x6 @ 24" O.C., U.O.N. All interior load bearing walls shall be 2x4 @ 24" O.C., U.O.N.

2. All headers less than 6'-0" at roof shall be 4x8 U.O.N.

3. See architectural drawings for roof and overhand slopes.

Blocked Diaphragm

4. Provide continuous double top plates at collector lines. Splice top plates as required, per detail 4/S1-5.4.

GENERAL NOTES:

1. Detail scales are for reference only. Do not scale from drawings.
2. See sheet S1-5.3 for for typical shearwall details and shearwall & holdown schedules.
3. See sheet S1-0.1 for structural notes & abbreviations. See sheets S1-5.1 & S1-5.3 for typical details.
4. Provide ½" CDX plywood sheathing w/ 8d @ 6" O.C. edge nailing, 8d @12" O.C. field nailing, on all exterior walls U.O.N. on plans as shearwall. For shearwalls, see shearwall schedule, sheet S1-5.3.
5. Provide 'Simpson' foundation anchors HFA8 @ 4'-0" from (E) sill plate to (E) concrete foundation around perimeter of building U.O.N. on plans as shearwall. For shearwalls, see shearwall schedule, sheet S1-5.3.
6. Provide 8" clearance from sill plates and wood sheathing to adjacent earth.
7. All new exterior walls shall be 2x6 @ 24" O.C. U.O.N., for interior walls either 2x4 @ 24" O.C., or 2x6 @ 24" O.C., S.A.D. Exterior post shall be 4x6 or 6x6, U.O.N. For all posts use CBSQ column base, U.O.N.

KEYED NOTES:

1. Typ. hangers (use A35 EA side of rafter for all exposed connections - exterior + porch):
   2 x 12 - U210 face mounted
   4 x 12 - LUS 414 face mounted
   4 x 12 - BA 412 (max) top mounted
   6¾" x 15" glulam - HGUS7.25/14
2. 4x4 douglas fir grade 1 column, typ. U.O.N. in 4x walls, 4x6 douglas fir grade 1 column, typ. U.O.N. in 6x walls All exterior columns, beams & truss elements shall be WCLIB Western Red Cedar No. 1, select for exposed, "Not Grade Stamped". See sheet S1-0.1 Section 06101 Framing Lumber.
3. Ceiling joists:
   span < 8'-0" 2x6 @ 24 "O.C. w/ LUS26
   8'-0" < span < 12'-0" 2x8 @ 24" O.C. w/ LUS28
   12'-0" < span < 16'-0" 2x10 @ 24" O.C. w/ LUS210
4. MST27-16d strap to DBL top plates, TYP, See 12/S1-5.4 & 9/S1-5.4
5. Provide continuous CMSTC16 strap from roof edge to edge along this line to 4x blocking below. See detail 15/S1-5.5
6. ST22 strap @ EA rafter, on top of rafters.
7. Awning, see detail 4/S1-5.8 & S.A.D.
8. All eaves and all exterior porch framing shall be ⅝" ACX T&G plywood. For eaves, see details 1/S1-5.5 & 4/S1-5.5.
9. S.A.D. for precise joist framing layout typ.
10. Moveable partition under beam, S.A.D.
11. Edge of blocked diaphragm, see 3/S1-5.3.
12. (2) CMST12 straps (1 EA side of beam) x 7'-0" long, centered on post below, see 8/S1-5.5. Note: Alt. connection - provide HDU8 from GLM BM to 4x BLKG. Extend 3 bays & provide (12) A35 clips (alt. sides of BLKG) from BLKG to DBL top plates.
13. Align a joist over shear wall, offset from centerline of wall.
14. CMSTC16 strap, see detail 9/S1-5.4.
15. S.A.D. & Electrical drawings for PV panels. For attachment to roofing, see detail 14/S1-5.5.

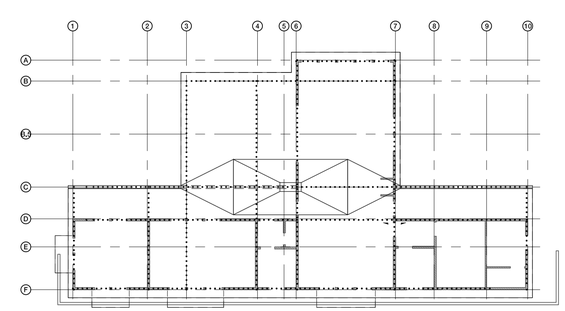

MAJOR ELEMENTS DIAGRAM
Boundary nailing

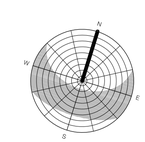

ROOF FRAMING PLAN
0 1' 2' 4'

Project Title:

City of Cupertino - McClellan Ranch Preserve Environmental Education Center Re-Bid

Design Firm:
SIEGEL & STRAIN Architects
1295 59th Street
Emeryville, CA 94608
510 / 547-8092
FAX 510 / 547-2604
info@siegelstrain.com

Consultant:
WARE ARCHITECTURE ENGINEERING
WARE ASSOCIATES
130 Webster Street Suite 105
Oakland CA 94607 USA
T 510 922 9888 F 510 922 9624

Stamp:

No.	Description	Date

Issue Note:
Construction Documents 01/10/2014

Project ID:	MRE: 12-018
File Name:	
Drawn by:	AG
Checked by:	JW
Plot Date:	01/08/2014
Scale:	1/4" = 1'-0"

Sheet Title:
Framing Plan

Sheet No.:
S1-1.1

2/20/2013 4:31:19 PM

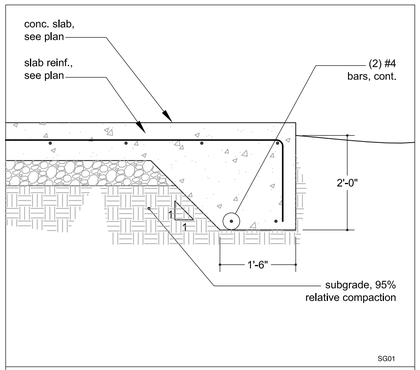

13 TYP. THICKENED SLAB EDGE

0 3 6 12

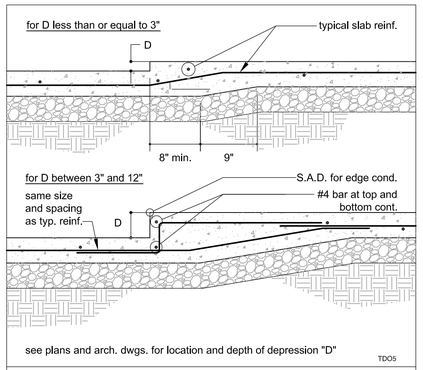

10 TYPICAL DEPRESSED SLAB

0 3 6 12

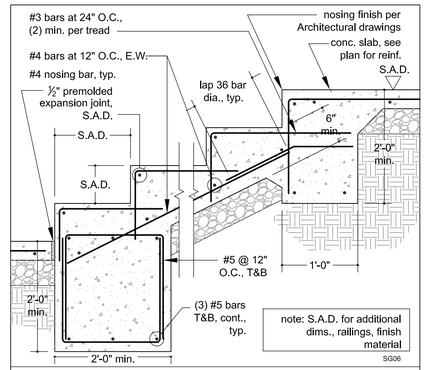

7 SITE CONCRETE STAIR

0 3 6 12

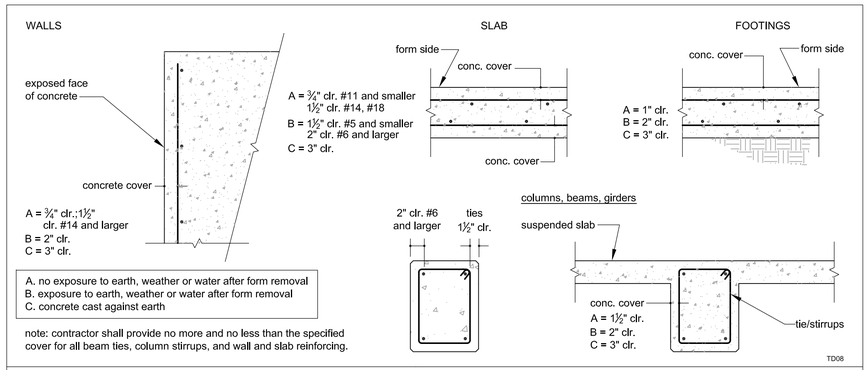

4 TYPICAL CONCRETE COVER

0 3 6 12

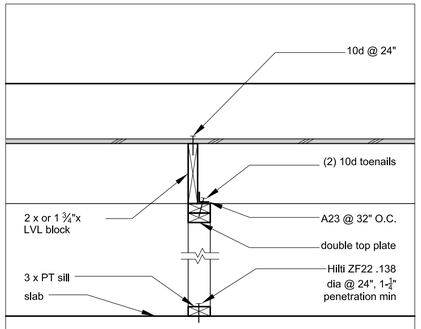

14 TYP. WD. PARTITION FRAMING

0 3 6 12

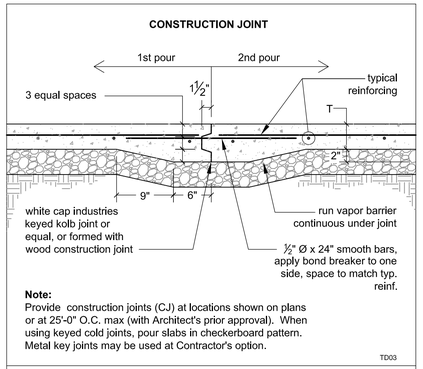

11 CONSTRUCTION JOINT CONC. SLAB-ON-GRADE

0 3 6 12

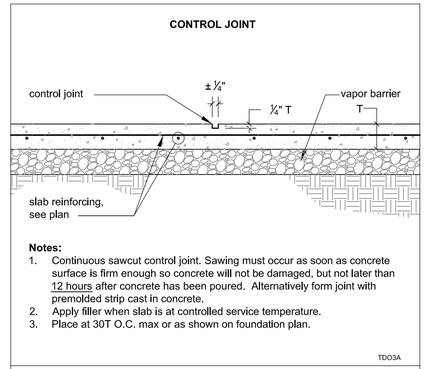

8 CONTROL JOINT CONCRETE SLAB-ON-GRADE

0 3 6 12

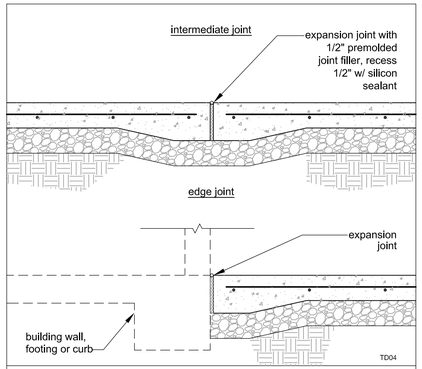

5 TYPICAL EXPANSION JOINT

0 3 6 12

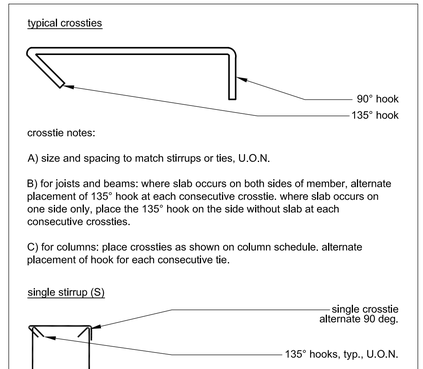

3 TYPICAL STIRRUPS AND TIES

0 3 6 12

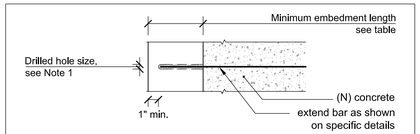

Bar size	Threaded rod size	Minimum embedment length [2,3]
#3	⅜" Ø	4"
#4	½" Ø	5"
#5	⅝" Ø	6"
#6	¾" Ø	8"
#7	⅞" Ø	10"
#8	1" Ø	12"

Notes:
1. Follow specific manufacturer guidelines for drilled hole diameter.
2. Embedment lengths shown on specific details supercede this schedule.
3. Anchor embedment into walls and slabs shall not exceed thickness (in direction of drilling) minus one inch.
4. See specifications for grout requirements. Submit grout technical information to structural engineer for approval.

TD49

15 GROUTED ANCHOR SCHEDULE

0 6" 1' 2'

CONCRETE STRENGTH PSI	BAR TYPE	BAR SIZE																	
		#3		#4		#5		#6		#7		#8		#9		#10		#11	
		CLASS		CLASS		CLASS		CLASS		CLASS		CLASS		CLASS		CLASS		CLASS	
		A	B	A	B	A	B	A	B	A	B	A	B	A	B	A	B	A	B
2500	TOP BAR	24	31	32	41	39	51	47	61	69	89	78	102	88	115	100	129	110	143
	ALL OTHER BARS	18	24	24	32	30	39	36	47	53	69	60	78	68	88	77	100	85	110
3000	TOP BAR	22	28	29	37	36	47	43	56	63	81	72	93	81	105	91	118	101	131
	ALL OTHER BARS	17	22	22	29	28	36	33	43	48	63	55	72	62	81	70	91	78	101
4000	TOP BAR	19	24	25	33	31	41	37	49	54	71	62	81	70	90	78	102	87	113
	ALL OTHER BARS	15	19	19	25	24	31	29	37	42	54	48	62	54	69	60	78	66	87

Notes:
1. Splice length in inches.
2. Use class B for all lap splices except class A may be used for non-structural slabs on grade.
3. Top bars = horizontal bars (other than in walls) placed with more than 12" of fresh concrete cast below bars.
4. Table is based upon minimum clear cover greater than one bar diameter and minimum clear spacing greater than two bar diameters. Where either of these requirement is met, increate lap length by 50%.
5. No more than (2) adjacent bars at same location.
6. Where different bar sizes are spliced in tension, splice length shall be the larger of splice Class A of the larger bar and the tension lap splice length of the smaller bar.
7. Hooked bars development length is 24 bar diameters minimum, U.O.N.

TD50

12 REINFORCING BAR LAP SPLICE SCHEDULE IN CONCRETE

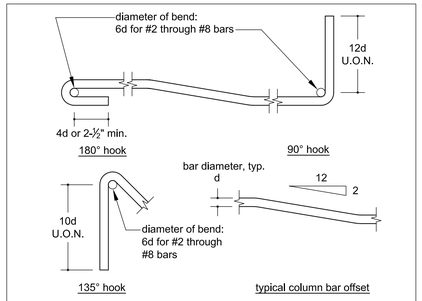

notes:
1. for bars larger than #8 bars, contact engineer for requirements.
2. provide these hooks throughout the work where shown on drawings.
3. all bar bends shall be in accordance CRSI manual of standard practice

TD09

6 TYP. REINF. BENDS, HOOKS AND OFFSET

Project Title:

City of Cupertino - McClellan Ranch Preserve
Environmental Education Center
Re-Bid

Design Firm:

SIEGEL & STRAIN Architects
1295 59th Street
Emeryville, CA 94608
510 / 547-8092
FAX 510 / 547-2604
info@siegelstrain.com

Consultant:

WARE
ARCHITECTURE ENGINEERING
WARE ASSOCIATES
130 Webster Street Suite 105
Oakland CA 94607 USA
T 510 922 9888 F 510 922 9624

Stamp:

REGISTERED PROFESSIONAL ENGINEER JOHN WILLIAM WARE No. 47942 CIVIL STATE OF CALIFORNIA
12.19.12

No.	Description	Date

Issue Note:

Construction Documents
01/10/2014

Project ID:	MRE: 12-018
File Name:	
Drawn by:	AG
Checked by:	JW
Plot Date:	01/08/2014
Scale:	AS SHOWN

Sheet Title:

Details

Sheet No.:

S1-5.1

2/25/2013 9:51:25 AM

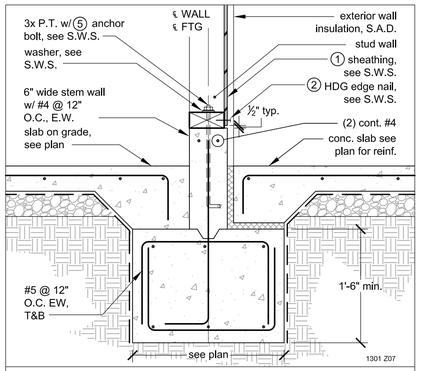

13 EXTERIOR SHEAR WALL AT PORCH SLAB

0 3 6 12

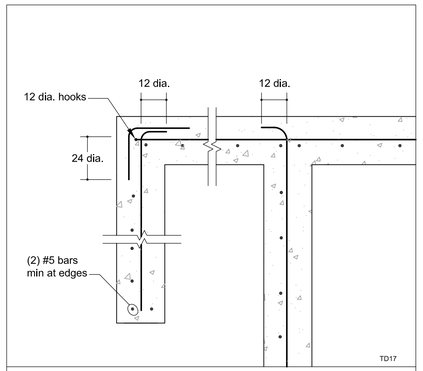

10 SINGLE LAYER CORNER REINFORCING

0 3 6 12

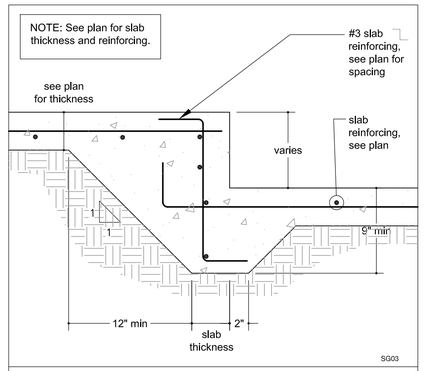

7 SLAB STEP

0 2 4 8

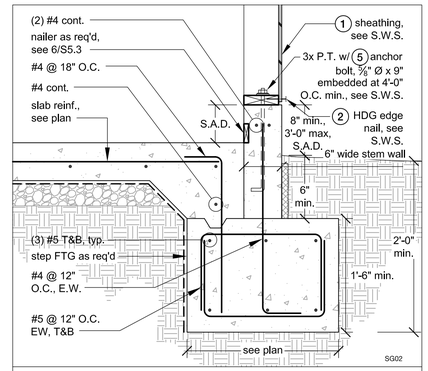

4 SHEARWALL AT SLAB EDGE OVER CURB

0 3 6 12

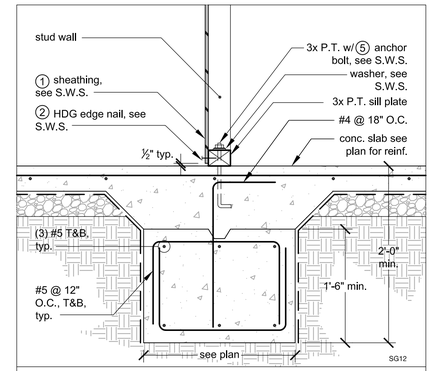

1 TYPICAL INTERIOR SHEAR WALL

0 3 6 12

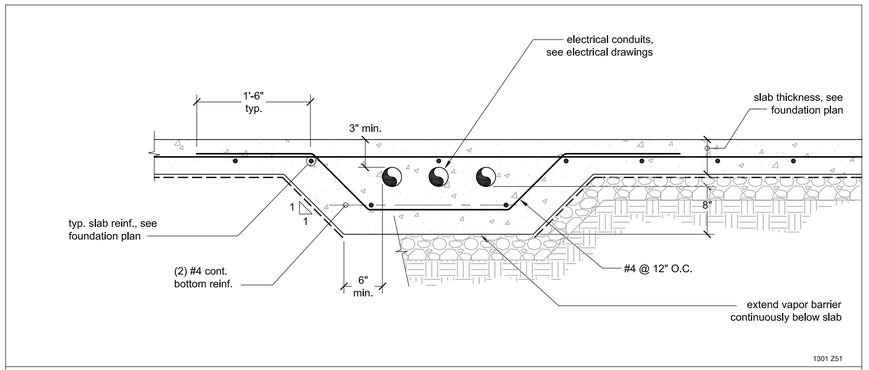

14 CONDUIT PENETRATION IN SLAB ON GRADE

0 3 6 12

8 SHEARWALL AT SLAB EDGE OVER CURB

¾" = 1'-0"

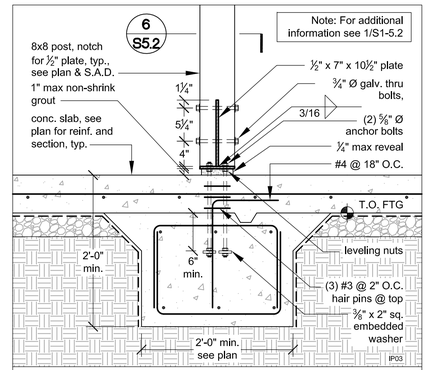

5 POST BASE & FOOTING

0 3 6 12

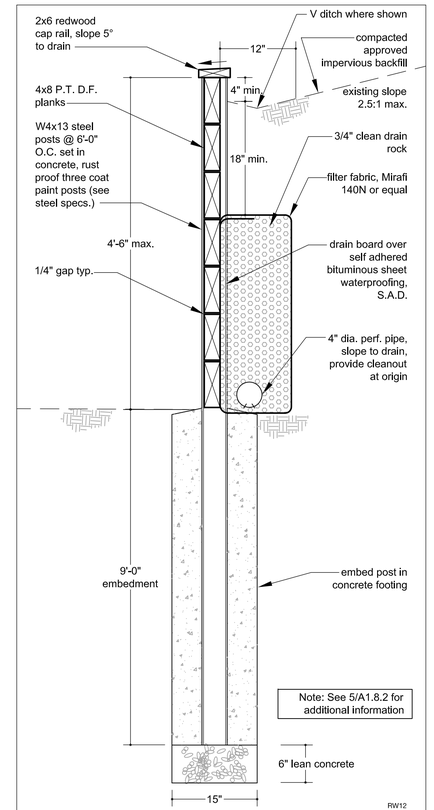

3 WOOD RETAINING WALL

0 3 6 12

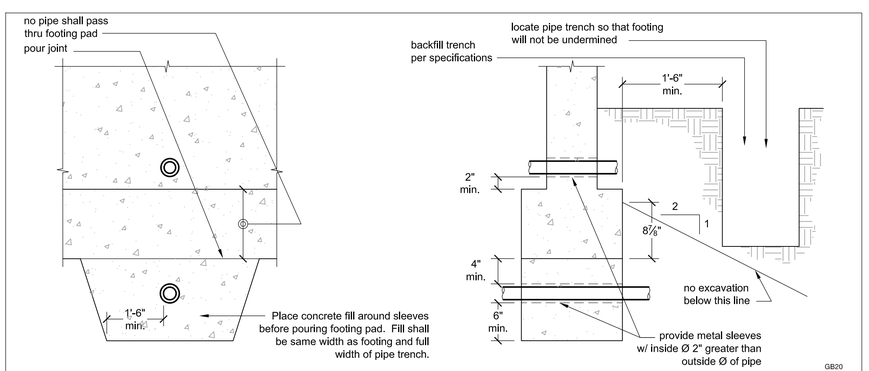

15 RELOCATION OF PIPES & TRENCHES TO SPREAD FOOTING

0 3 6 12

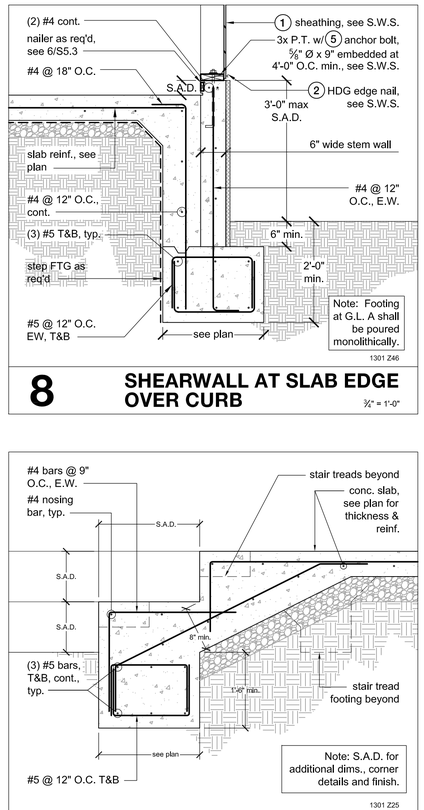

9 SECTION AT PORCH EDGE

3/4" = 1'-0"

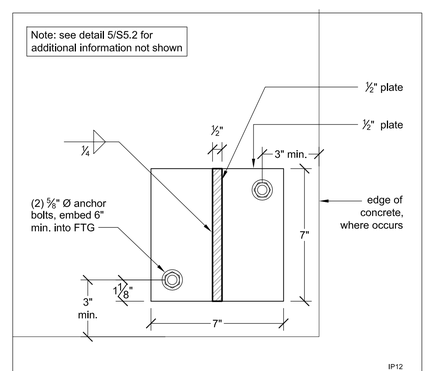

6 WOOD COLUMN BASE PLATE

0 1 2 4

Project Title:

City of Cupertino - McClellan Ranch Preserve
Environmental Education Center
Re-Bid

Design Firm:
SIEGEL & STRAIN Architects
1295 59th Street
Emeryville, CA 94608
510 / 547-8092
FAX 510 / 547-2604
info@siegelstrain.com

Consultant:
WARE ARCHITECTURE ENGINEERING
WARE ASSOCIATES
130 Webster Street Suite 105
Oakland CA 94607 USA
T 510 922 9888 F 510 922 9624

Stamp:

REGISTERED PROFESSIONAL ENGINEER JOHN PRELIMINARY 12-14 CIVIL STATE OF CALIFORNIA

No.	Description	Date

Issue Note:
Construction Documents
01/10/2014

Project ID:	MRE: 12-018
File Name:	
Drawn by:	AG
Checked by:	JW
Plot Date:	01/08/2014
Scale:	AS SHOWN

Sheet Title:
Details

Sheet No.:
S1-5.2

2/25/2013 9:51:25 AM

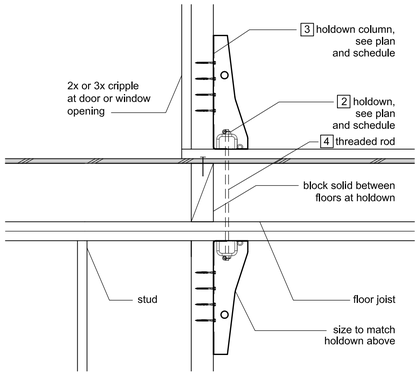

HOLDOWN BETWEEN FLOORS

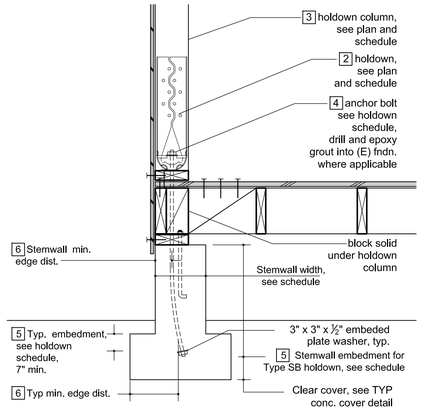

TYP. HOLDOWN SECTION

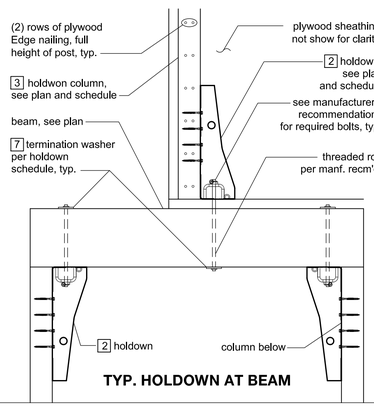

TYP. HOLDOWN AT BEAM

1 MARK	2 HOLDOWN	3 MINIMUM POST SIZE	FOUNDATION TYPE	4 ANCHOR DIAMETER[1]	5 MINIMUM ANCHOR EMBEDMENT (in)	6 MINIMUM EDGE DISTANCE (in)	7 HOLDOWN TERMINATION WASHER[2] (in)x(in)x(in)
H2	HDU2	4x4	Typ	⅝	7	7 ½	3 x 3 x ¼
			Stemwall, 6" wide	SB ⅝ x 24	18	1 ½	
H3	HDU4	4x4	Typ	⅝	7	10 ½	3 x 3 x ¼
			Stemwall, 6" wide	SB ⅝ x 24	18	1 ½	
H4	HDU8	4x6[3] or 6x6	Typ	⅞	9	12	3½ x 3½ x ¼
H5	HDQ8	4x8[3] or 6x6	Typ	⅞	9	13 ½	5 x 5 x ¼
H6 A	HHDQ14[3]	6x6	Typ	1	11	16 ½	6 x 3½ x 1
H6 B	(2) HDU8	6x6	Typ	(2) ⅞	11	16 ½	(2) 3½ x 3½ x ¼
H7	HDU14[3]	6x6	Typ	1	12	18	5 x 3½ x ⅜ or 7 x 3½ x 1
H8	(2) HHDQ11	6x8	Typ	(2) 1	14	21	(2) 5 x 5 x ¼

1. Minimum post size is based on a 10'-0" high column and supporting only seismic load.
2. Screw a minimum of 5 ½" through 4x6 or larger posts (fasten through 6x dimension).
3. At foundation corner proved a minimum end distance of 1.5 times the anchor embedment at typical condition and 6" minimum at stemwall.
4. When holdown terminates on wood beam, use termination washer.
5. Use heavy hex anchor nut.
6. SB anchor bolts shall be used only for concrete poured monolithically.

HOLDOWN SCHEDULE

TD35

14 TYPICAL HOLDOWN DETAILS

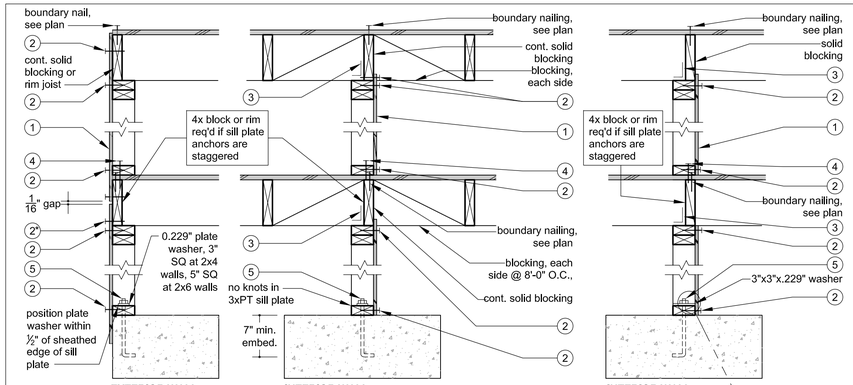

* Framing clip not necessary if edge nailed to rim joist.

NOTE: Circled references refer to items in shearwall schedule.

SHEARWALL SCHEDULE					
MARK	SHEATHING 1	EDGE NAIL 2 / FIELD NAIL 2	FRAMING CLIP* 3	SILL PLATE ANCHOR 4	ANCHOR BOLTS + 5
1	15/32" STRUCTURAL I	10d @ 6" O.C. / 10d @ 12" O.C.	A35 @ 16" O.C.	SDS 1/4x6" @ 16"	5/8" DIA. x 9" @ 4'-0" O.C.
2	15/32" STRUCTURAL I	10d @ 4" O.C. / 10d @ 12" O.C.	A35 @ 16" O.C.	SDS 1/4x6" @ 9" O.C.	5/8" DIA. x 9" @ 2'-6" O.C.
3	15/32" STRUCTURAL I	10d @ 3" O.C. / 10d @ 12" O.C.	A35 @ 8" O.C.	SDS 1/4x6" @ 6" O.C.	5/8" DIA. x 9" @ 2'-0" O.C.
4	15/32" STRUCTURAL I	10d @ 2" O.C. / 10d @ 12" O.C.	A35 @ 6" O.C.	SDS 1/4x6" + @ 6" STAGGERED	5/8" DIA. x 9" @ 1'-4" O.C.
2 2	15/32" STR. I BOTH SIDES	10d @ 3" O.C. / 10d @ 12" O.C.	A35 @ 6" O.C.	SDS 1/4x6" @ 4"	5/8" DIA. x 9" @ 1'-4" O.C.
3 3	15/32" STR. I BOTH SIDES	10d @ 2" O.C. / 10d @ 12" O.C.	A35 @ 4" O.C.	SDS 1/4x6" @ 3" STAGGERED+	5/8" DIA. x 9" @ 1'-0" O.C.
4 4	15/32" STR. I BOTH SIDES	10d @ 2" O.C. / 10d @ 12" O.C.	A35 @ 3" O.C.	SDS 1/4x6" @ 2" STAGGERED+	5/8" DIA. x 9" @ 1'-0" O.C.

+ 4x blocking @ floor joists
Provide (2) rows of connectors staggered.

* Flat orientation may use LS instead of L.

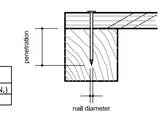

TYPICAL COMMON NAIL PENETRATION		
NAIL SIZE	DIAMETER (IN.)	REQ'D PENETRATION (IN.)
10d	0.148	1.78

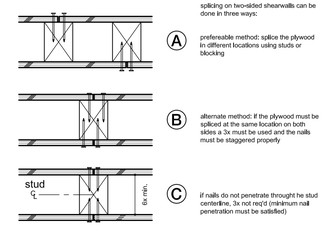

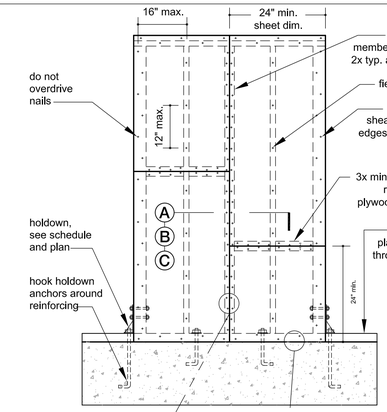

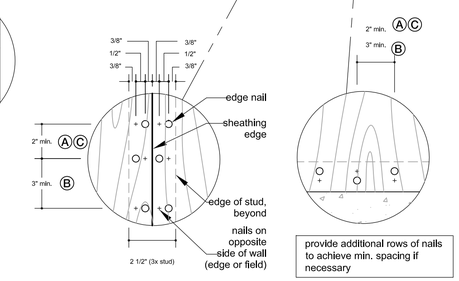

8 TYPICAL SHEARWALL SCHEDULE

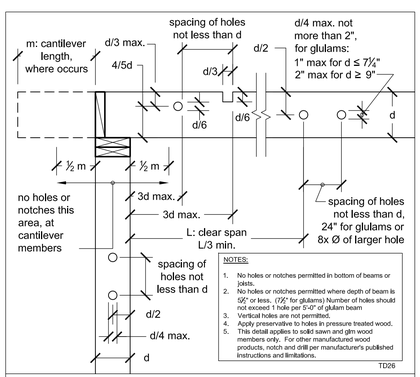

NOTES:
1. No holes or notches permitted in bottom of beams or joists.
2. No holes or notches permitted where depth of beam is 5½" or less. (7½" for glulams) Number of holes should not exceed 1 hole per 5'-0" of glulam beam
3. Vertical holes are not permitted.
4. Apply preservative to holes in pressure treated wood.
5. This detail applies to solid sawn and glm wood members only. For other manufactured wood products, notch and drill per manufacturer's published instructions and limitations.

TD26

15 TYPICAL HOLES AND NOTCHES

0 3 6 12

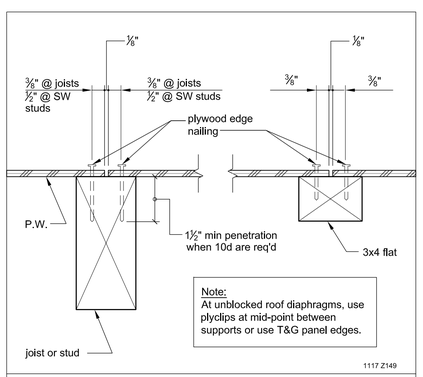

Note:
At unblocked roof diaphragms, use plyclips at mid-point between supports or use T&G panel edges.

1117 Z149

12 TYP. PLYWOOD PANEL EDGE / BOUNDARY DETAIL

0 3 6 12

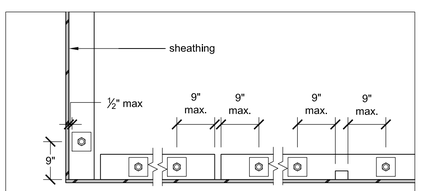

Typical anchor bolts are 5/8" min. dia embedded at least 7" into concrete and spaced not more than 4'-0" apart, with two bolts per sill plate piece, each one not more than 12" or less than 7 bolt diameters from sill plate end. All anchor bolts shall be provided with 0.229" thick min. plate washers, 3" SQ. at 2x4 walls, 5" SQ. at 2x6 walls.

Where plate is drilled or notched more than 1/3 width of plate, sill bolts shall be placed 9" on each side of cut. Plates less than 6" in width shall not be drilled or notched other than for sill bolts. Anchor bolts in contact with treated wood shall be stainless steel, hot dipped galvanized G-185 coated, or corrosion resistant polymer coated.

TD24

9 TYPICAL SILL BOLTING LAYOUT

0 3 6 12

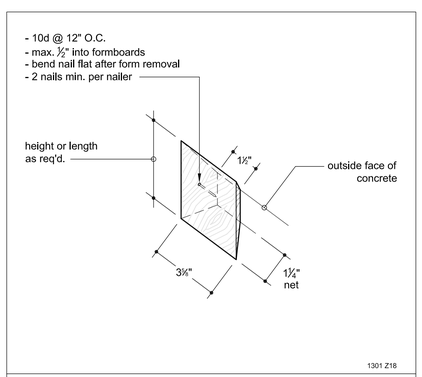

1301 Z18

6 BUILT-IN NAILER IN CONCRETE

0 1 2 4

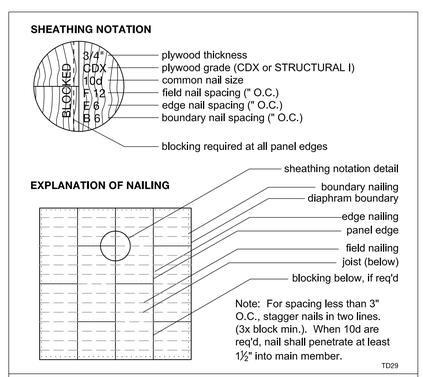

Note: For spacing less than 3" O.C., stagger nails in two lines. (3x block min.). When 10d are req'd, nail shall penetrate at least 1½" into main member.

TD29

3 SHEATHING NOTATION

0 2 4 8

Project Title:

City of Cupertino - McClellan Ranch Preserve Environmental Education Center Re-Bid

Design Firm:

SIEGEL & STRAIN Architects
1295 59th Street
Emeryville, CA 94608
510 / 547-8092
FAX 510 / 547-2604
info@siegelstrain.com

Consultant:

WARE ARCHITECTURE ENGINEERING
WARE ASSOCIATES
130 Webster Street Suite 105
Oakland CA 94607 USA
T 510 922 9888 F 510 922 9624

Stamp:

No.	Description	Date

Issue Note:

Construction Documents 01/10/2014

Project ID:	MRE: 12-018
File Name:	
Drawn by:	AG
Checked by:	JW
Plot Date:	01/08/2014
Scale:	AS SHOWN

Sheet Title:

Details

Sheet No.:

S1-5.3

2/25/2013 9:51:25 AM

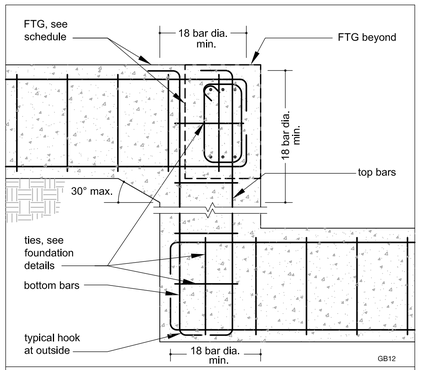

13 30° - 90° STEPPED FOOTING

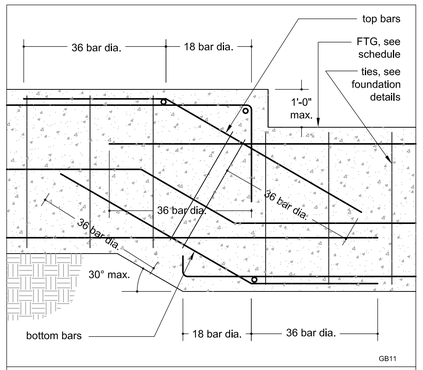

10 5° - 30° STEPPED FOOTING

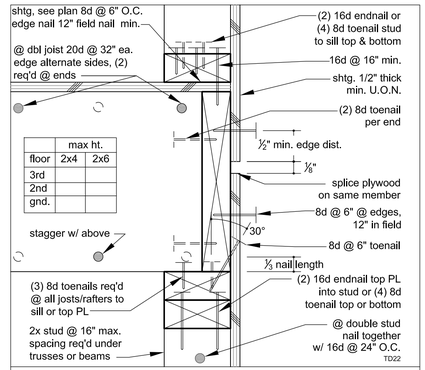

	max ht.	
floor	2x4	2x6
3rd		
2nd		
gnd.		

7 MIN. NAILING STANDARDS

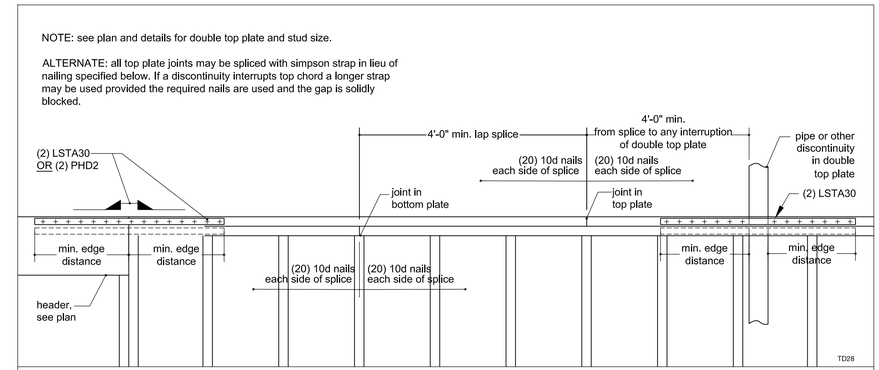

4 TYPICAL SPLICES IN TOP PLATE

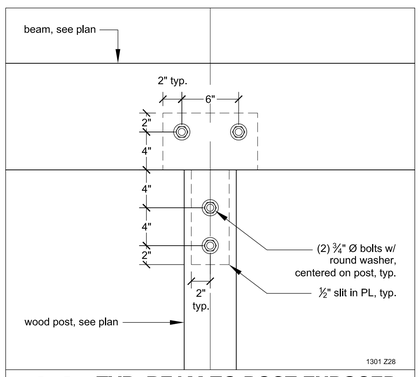

14 TYP. BEAM TO POST EXPOSED CONNECTION

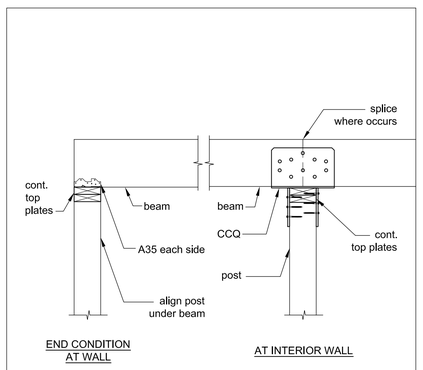

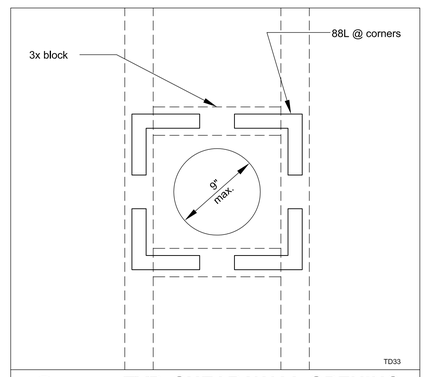

8 TYP. SHEAR WALL OPENING

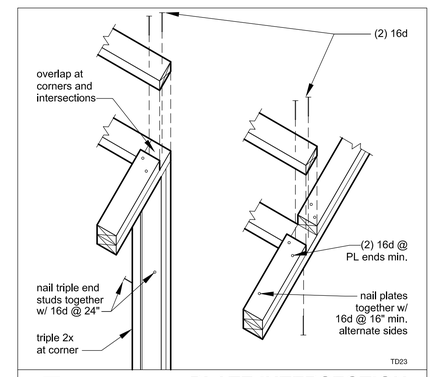

5 PLATE INTERSECTION

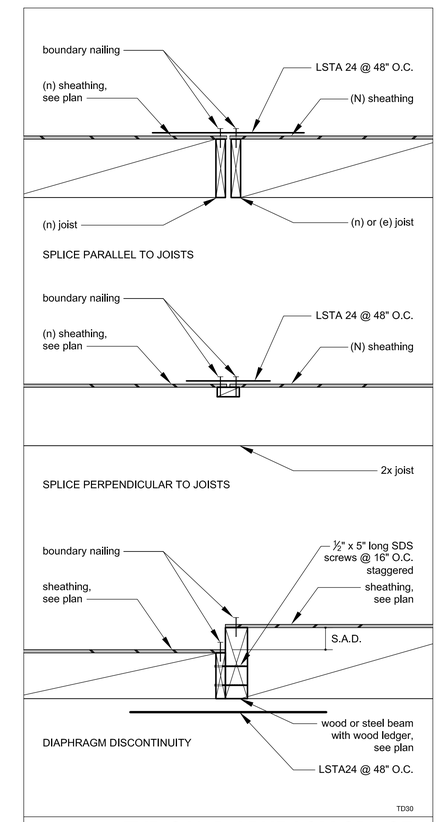

3 TYPICAL DIAPHRAGM SPLICE

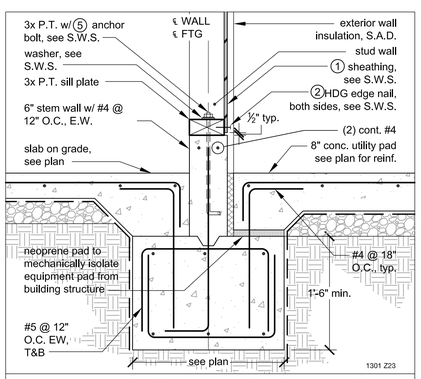

15 UTILITY PAD AT FOUNDATION

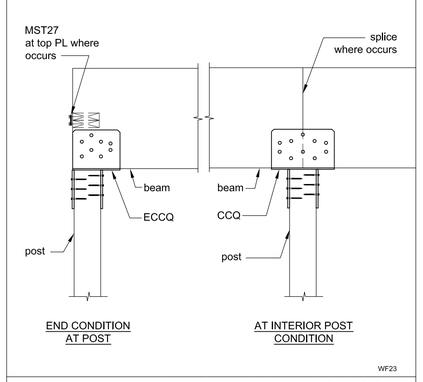

12 TYPICAL BEAM TO POST

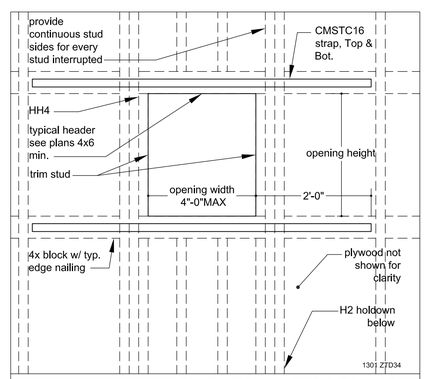

9 SHEARWALL OPENING

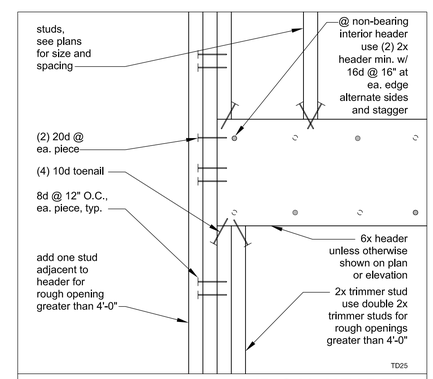

6 TYPICAL HEADER

Project Title:

City of Cupertino - McClellan Ranch Preserve
Environmental Education Center
Re-Bid

Design Firm:
SIEGEL & STRAIN Architects
1295 59th Street
Emeryville, CA 94608
510 / 547-8092
FAX 510 / 547-2604
info@siegelstrain.com

Consultant:
WARE ARCHITECTURE ENGINEERING
WARE ASSOCIATES
130 Webster Street Suite 105
Oakland CA 94607 USA
T 510 922 9888 F 510 922 9624

Stamp:

No.	Description	Date

Issue Note:
Construction Documents
01/10/2014

Project ID:	MRE: 12-018
File Name:	
Drawn by:	AG
Checked by:	JW
Plot Date:	01/08/2014
Scale:	AS SHOWN

Sheet Title:
Details

Sheet No.:
S1-5.4

2/25/2013 9:51:25 AM

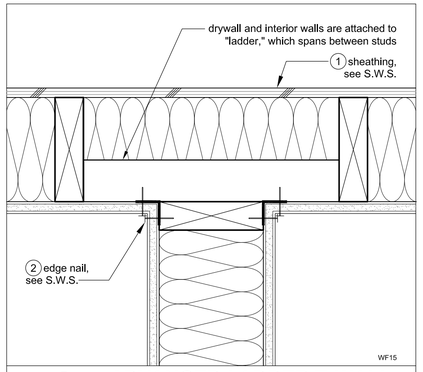

10 ADVANCED LADDER T-WALL
0 1 2 4

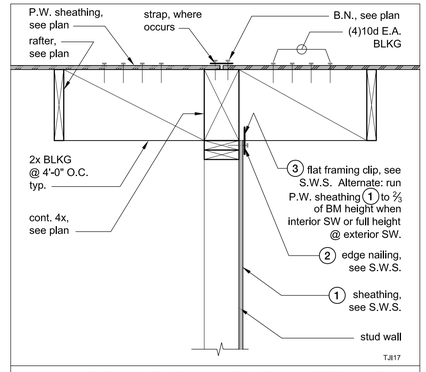

7 BEAM PARALLEL TO INTERIOR SHEARWALL
0 3 6 12

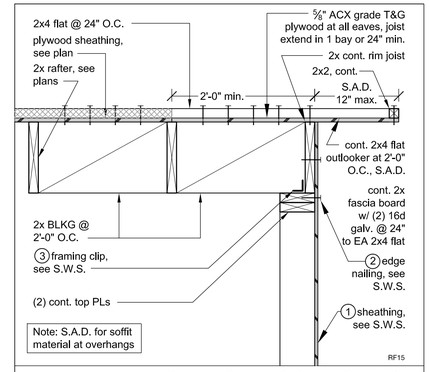

4 RAKE OUTLOOKER, TYP.
0 3 6 12

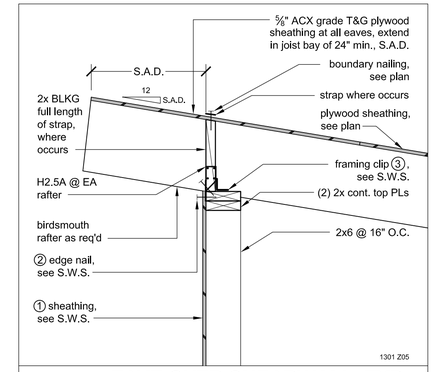

1 EAVE OVER SHEARWALL, TYP.
0 3 6 12

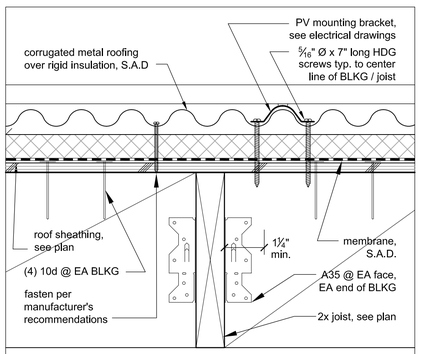

14 ROOF SECTION AT PV PANELS
0 1 2 4

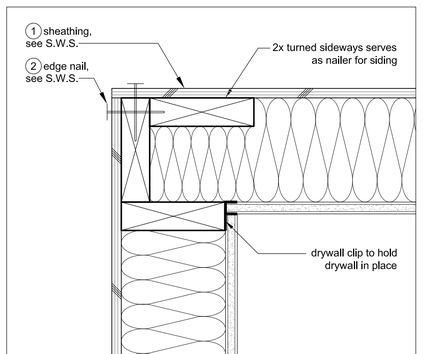

11 ADVANCED CORNER
0 1 2 4

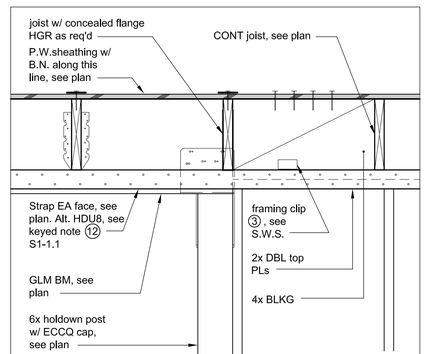

8 GLM BEAM TO SHEAR WALL CONN.
0 3 6 12

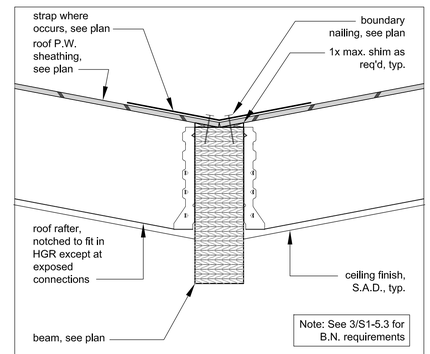

5 VALLEY BEAM
0 2 4 8

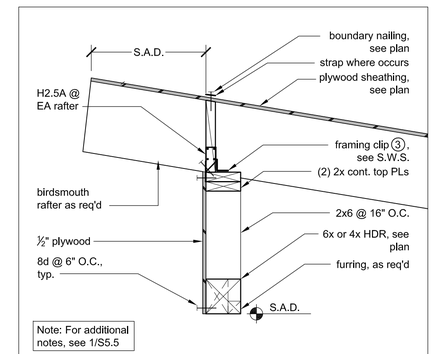

2 EAVE OVER HEADER
0 3 6 12

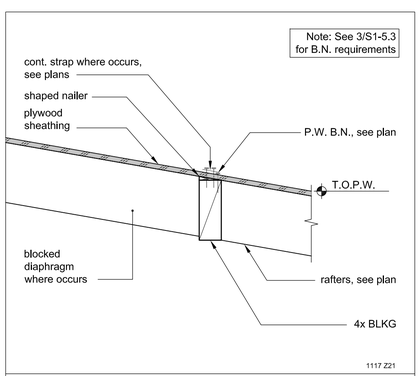

15 DRAG STRAP SECTION
0 3 6 12

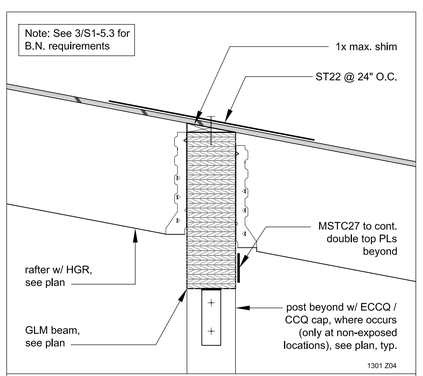

12 INTERMEDIATE ROOF BEAM
0 2 4 8

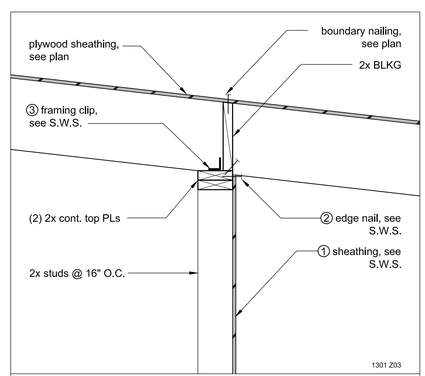

9 JOISTS PERPENDICULAR TO SHEARWALL
0 3 6 12

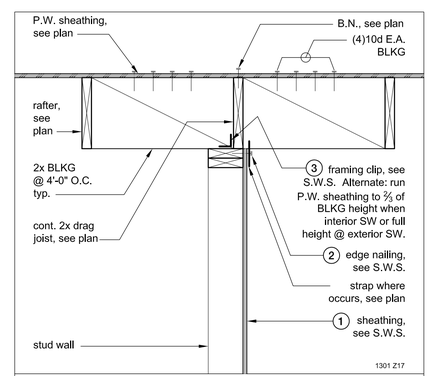

6 JOISTS PARALLEL TO INTERIOR SHEARWALL
0 3 6 12

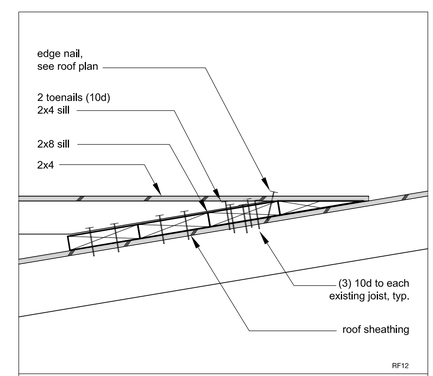

3 BUILT-UP ROOF SECTION
0 2 4 8

Project Title:

City of Cupertino - McClellan Ranch Preserve
Environmental Education Center
Re-Bid

Design Firm:
SIEGEL & STRAIN Architects
1295 59th Street
Emeryville, CA 94608
510 / 547-8092
FAX 510 / 547-2604
info@siegelstrain.com

Consultant:
WARE
ARCHITECTURE ENGINEERING
WARE ASSOCIATES
130 Webster Street Suite 105
Oakland CA 94607 USA
T 510 922 9888 F 510 922 9624

Stamp:

No.	Description	Date

Issue Note:
Construction Documents
01/10/2014

Project ID:	MRE: 12-018
File Name:	
Drawn by:	AG
Checked by:	JW
Plot Date:	01/08/2014
Scale:	AS SHOWN

Sheet Title:
Details

Sheet No.:
S1-5.5

2/25/2013 9:51:25 AM

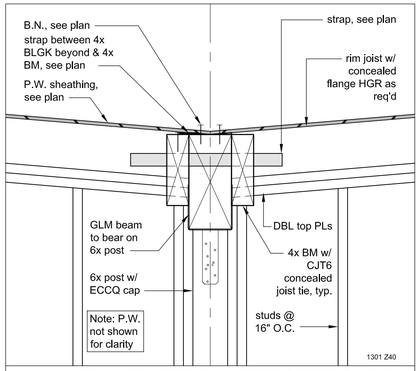

13 VALLEY BEAM AT EAST FACADE

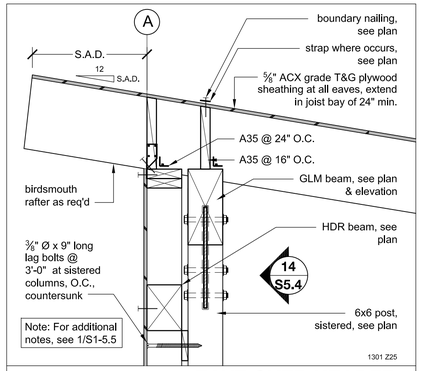

10 EAVE OVER HEADER

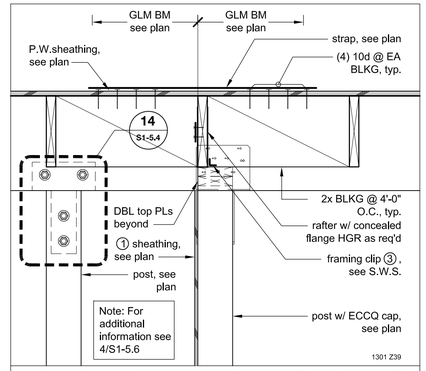

7 GLM BEAM BUTT-TO-BUTT CONNECTION

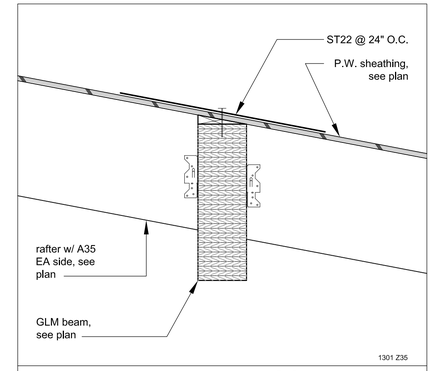

4 INTERMEDIATE ROOF BEAM AT EXPOSED RAFTERS

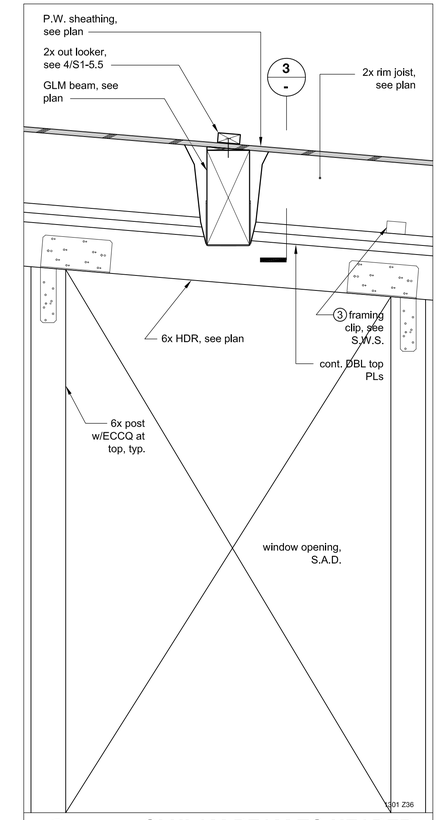

2 GLULAM BEAM TO HEADER

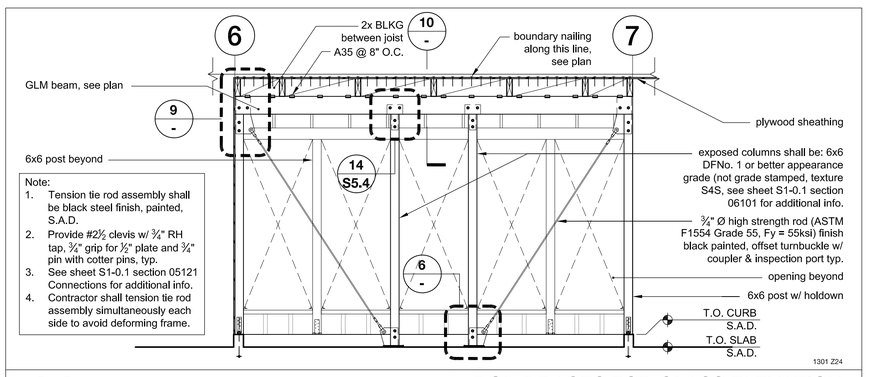

14 ROD BRACES FOR GLASS ELEVATION

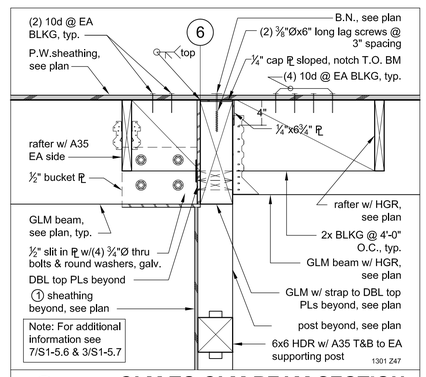

8 GLM TO GLM BEAM SECTION

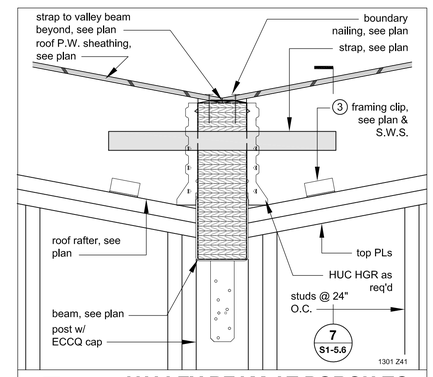

5 VALLEY BEAM AT PORCH TO INTERIOR CONN.

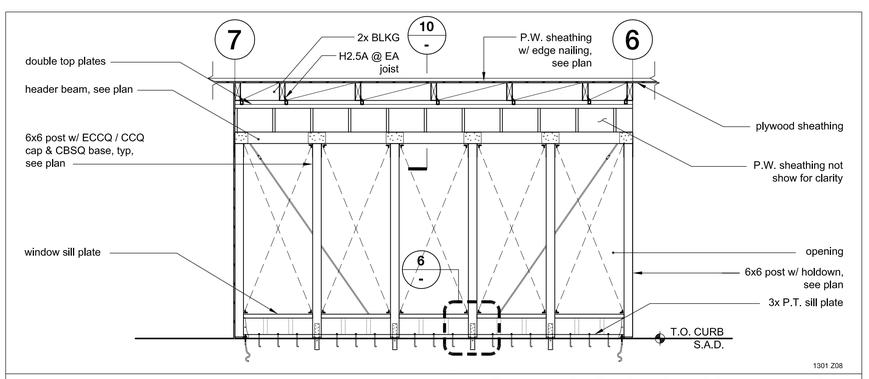

15 ROD BRACES FOR GLASS ELEVATION

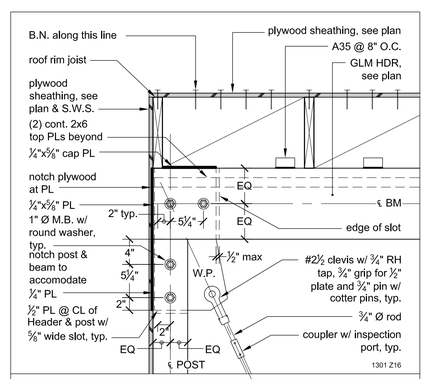

9 ROD BRACE TOP CONNECTION

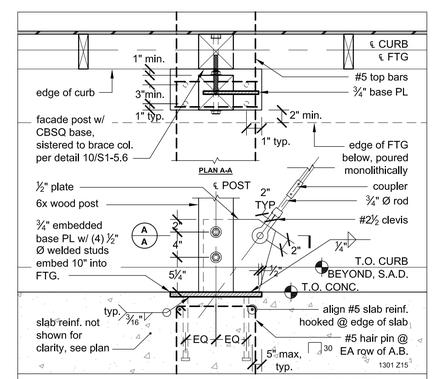

6 FRAME DETAIL

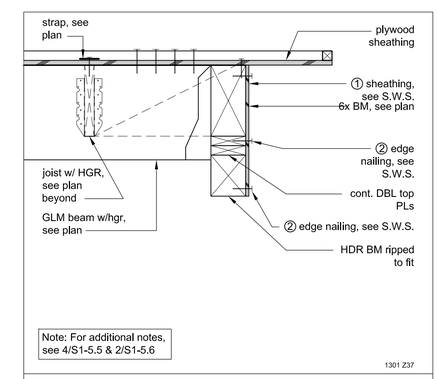

3 GLULAM TO HEADER CONNECTION

Project Title:

City of Cupertino - McClellan Ranch Preserve
Environmental Education Center
Re-Bid

Design Firm:
SIEGEL & STRAIN Architects
1295 59th Street
Emeryville, CA 94608
510 / 547-8092
FAX 510 / 547-2604
info@siegelstrain.com

Consultant:
WARE ARCHITECTURE ENGINEERING
WARE ASSOCIATES
130 Webster Street Suite 105
Oakland CA 94607 USA
T 510 922 9888 F 510 922 9624

Stamp:

No.	Description	Date

Issue Note:
Construction Documents
01/10/2014

Project ID:	MRE: 12-018
File Name:	
Drawn by:	AG
Checked by:	JW
Plot Date:	01/08/2014
Scale:	AS SHOWN

Sheet Title:
Details

Sheet No.:
S1-5.6

4/29/2013 1:09:53 PM

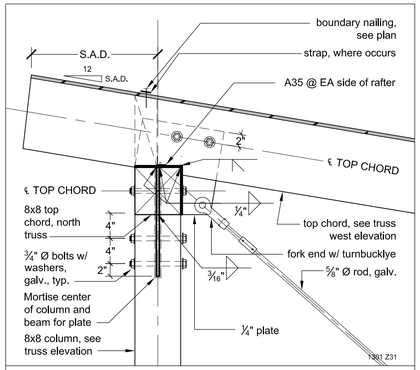

13 TOP CHORD AT END COLUMN

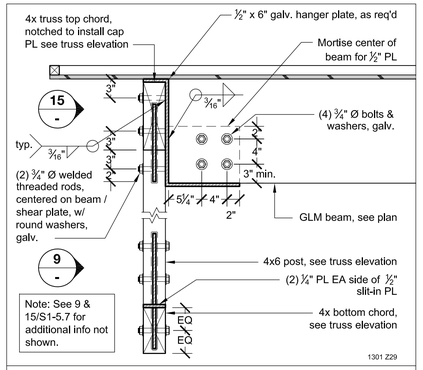

10 BEAM / TRUSS CONNECTION

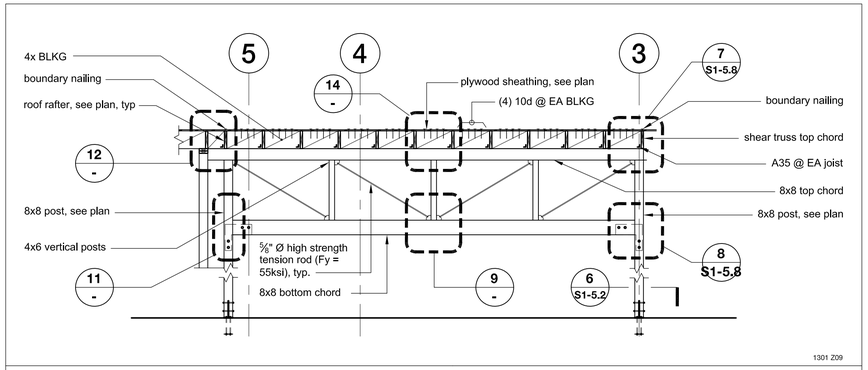

7 PORCH SHEAR TRUSS - NORTH ELEVATION

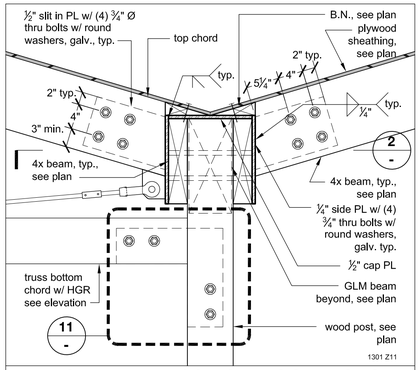

1 SHEAR TRUSS TO 4X COLLECTOR CONNECTION

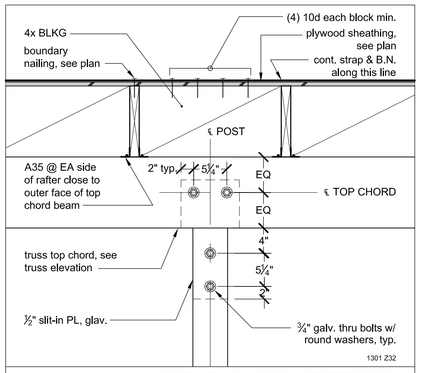

14 SHEAR CONN. AT TRUSS BOUNDARY

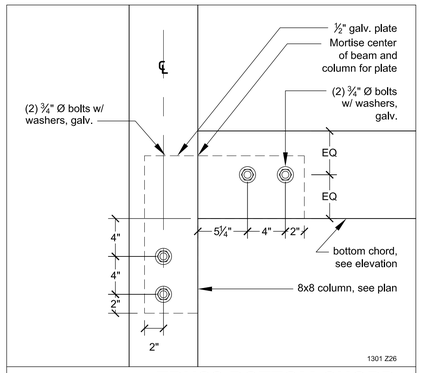

11 TRUSS BOTTOM CHORD SHEAR TAB

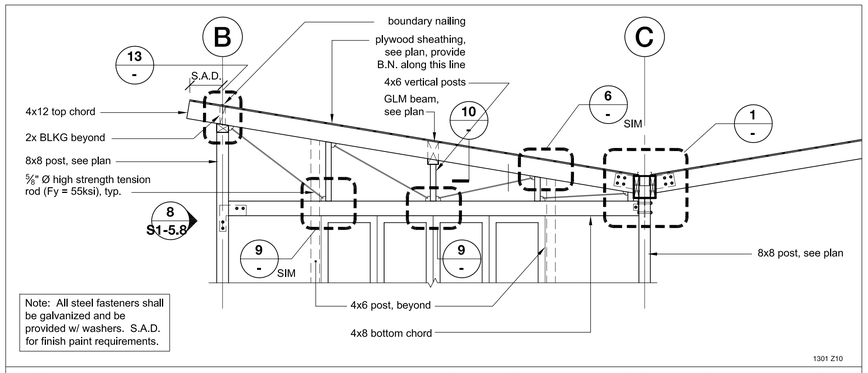

8 PORCH SHEAR TRUSS - WEST ELEVATION

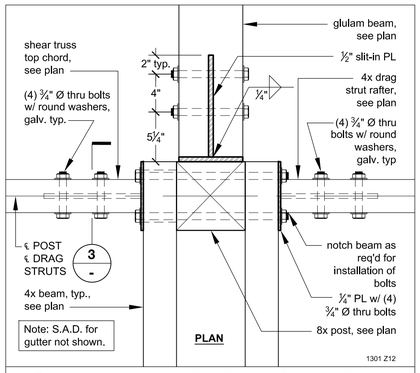

2 SHEAR TRUSS TO 4X COLLECTOR PLAN VIEW

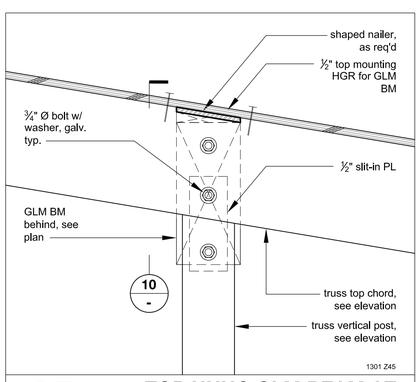

15 TOP HUNG GLM BEAM AT WEST TRUSS

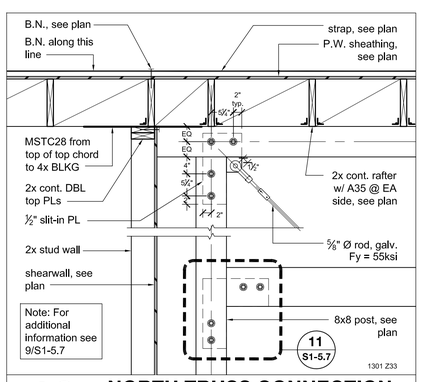

12 NORTH TRUSS CONNECTION TO BUILDING

¼" = 1'-0"

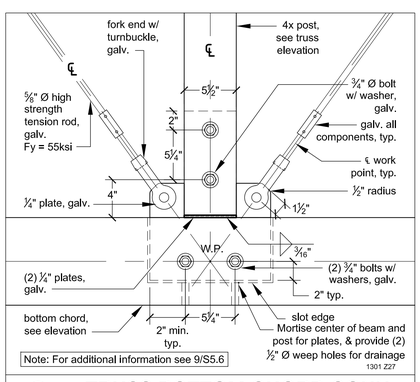

9 TRUSS BOTTOM CHORD CONN.

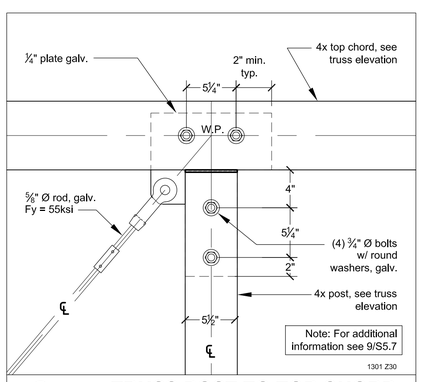

6 TRUSS POST TO TOP CHORD

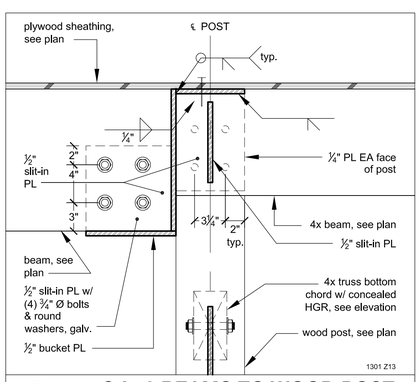

3 G.L. 3 BEAMS TO WOOD POST CONNECTION

Project Title:

City of Cupertino - McClellan Ranch Preserve
Environmental Education Center
Re-Bid

Design Firm:
SIEGEL & STRAIN Architects
1295 59th Street
Emeryville, CA 94608
510 / 547-8092
FAX 510 / 547-2604
info@siegelstrain.com

Consultant:
WARE ARCHITECTURE ENGINEERING
WARE ASSOCIATES
130 Webster Street Suite 105
Oakland CA 94607 USA
T 510 922 9888 F 510 922 9624

Stamp:

No.	Description	Date

Issue Note:
Construction Documents
01/10/2014

Project ID:	MRE: 12-018
File Name:	
Drawn by:	AG
Checked by:	JW
Plot Date:	01/08/2014
Scale:	AS SHOWN

Sheet Title:
Details

Sheet No.:
S1-5.7

6/4/2013 10:55:20 AM

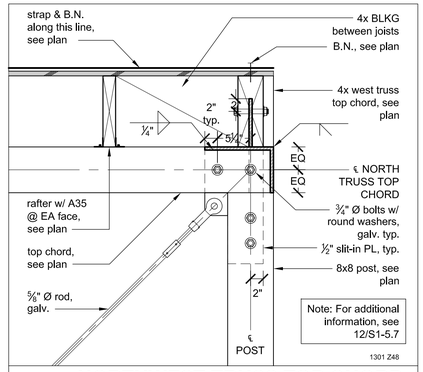

7 NORTHWEST TRUSS TOP CHORD CORNER CONN.

0 3 6 12

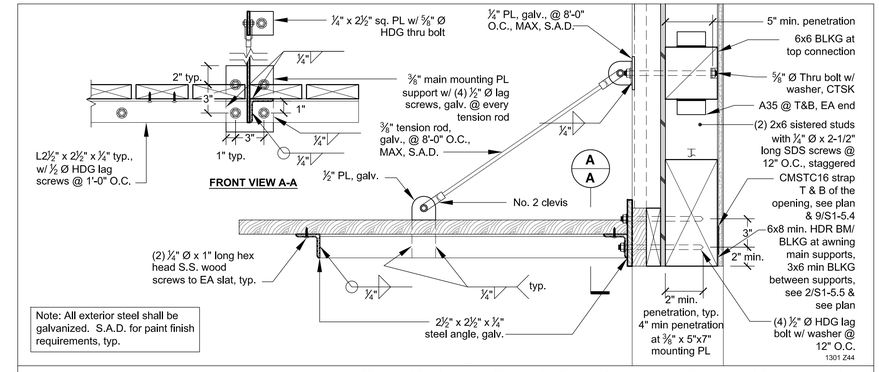

4 SUNSCREEN OVER DOUBLE HUNG WINDOW, TYP.

0 2 4 8

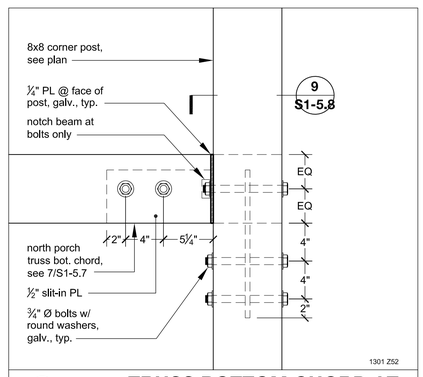

8 TRUSS BOTTOM CHORD AT CORNER POST

0 2 4 8

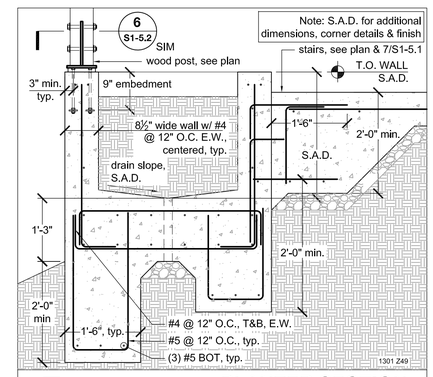

5 PLANTER SECTION

3/4" = 1'-0"

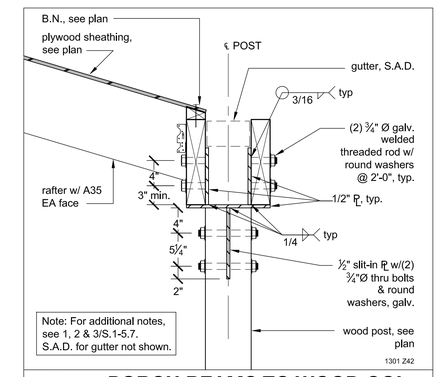

2 PORCH BEAMS TO WOOD COL. CONNECTION

0 3 6 12

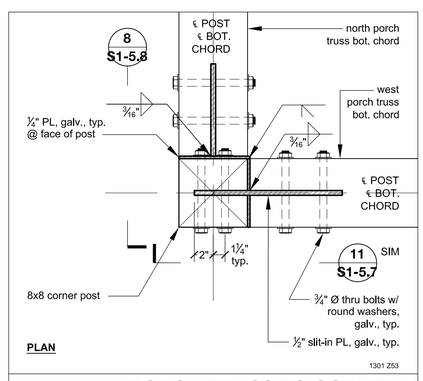

9 PORCH TRUSS TO CORNER POST CONN.

0 2 4 8

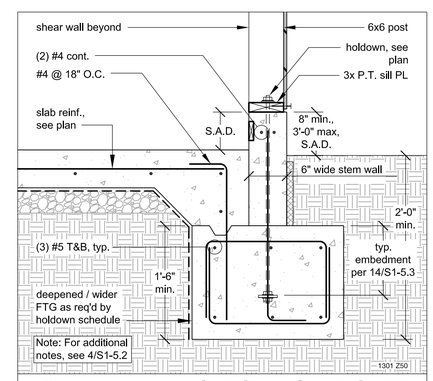

6 HOLDOWN OVER CURB

0 3 6 12

Project Title:

City of Cupertino - McClellan Ranch Preserve
Environmental Education Center
Re-Bid

Design Firm:

SIEGEL & STRAIN Architects
1295 59th Street
Emeryville, CA 94608
510 / 547-8092
FAX 510 / 547-2604
info@siegelstrain.com

Consultant:

WARE
ARCHITECTURE ENGINEERING
WARE ASSOCIATES
130 Webster Street Suite 105
Oakland CA 94607 USA
T 510 922 9888 F 510 922 9624

Stamp:

REGISTERED PROFESSIONAL ENGINEER JOHN WILLIAM WARE 12-14 CIVIL STATE OF CALIFORNIA

No.	Description	Date

Issue Note:

Construction Documents
01/10/2014

Project ID:	MRE: 12-018
File Name:	
Drawn by:	AG
Checked by:	JW
Plot Date:	01/08/2014
Scale:	AS SHOWN

Sheet Title:

Details

Sheet No.:

S1-5.8

6/26/2013 3:18:11 PM

GENERAL STRUCTURAL NOTES

The Contractor shall thoroughly review all of the drawings prior to beginning construction. If any discrepancies between the plans and details exist the Contractor shall call the Engineer for clarification. For member sizes, the plans shall generally take precedence over the details. Conform to the following except where more stringent requirements are specified.

Refer to architectural drawings for the following: floor finishes; depressions and curbs on floors; opening required for windows, doors, ducts, vents, plumbing, etc; flashing, insets, anchorages, hangers, etc, embed in or attached to the structure; roadways, walks, paving, stairs, terraces, exterior grades, extensions of roof surface and locations of drains and partition walls.

01000 GENERAL

01310 PRECONSTRUCTION CONFERENCE
Prior to beginning any construction, the Contractor shall schedule a Pre-Construction Conference with the Engineer, Geotechnical Engineer and the Architect to review the conventions and information shown on the plans, details, and specifications as well as the Construction Administration process to be followed during construction. This is also a time for the Contractor to ask any general questions of the design team that may be pertinent to the construction process.

01315 COORDINATION
The Contractor shall coordinate Architectural and Structural requirements. Notify the Architect of any conflicts and do not proceed with the work until conflicts are resolved.

01330 SUBMITTALS
Shop drawings of all steel frame fabrication shall be submitted for the Engineer's review. Items submitted for review shall have Contractor's approval and date indicated on each copy. Submit two copies in addition to copies desired to be returned to Contractor. The Engineer requires two weeks for a complete review of shop drawings. Once approved, if variations between the shop drawings and the original construction drawings (plans & details) exist, the shop drawings shall take precedence.

01400 INSPECTION
Provide Special Inspection in accordance with CBC Chapter 17 for the following work:

- 1704.3 Periodic inspection of material verification and high strength bolting.
- 1704.3 Continuous inspection during the welding of any structural steel with single-pass fillet welds greater than 5/16" welds, multipass welds and complete and partial penetration groove welds.
- 1704.3 Periodic inspection during the welding of any structural steel with single-pass fillet welds less than or equal to 5/16".
- 1704.4 Taking of test specimens and the placing of all concrete.
- 1704.4 Prior to and during the placement of bolts installed in concrete.
- 1704.4 Prior to the enclosing of forms for all reinforcing steel.
- 1704.7 Verify materials, densities and lift thickness during placed and compaction of controlled fill.
- 1704.7 Periodic inspection of materials below footings, proper excavation depth, subgrade preparation.
- 1704.9 During the drilling of piers and verification of pier placement, plumbness, diameter, lengths, and embedment into bedrock.

Contractor shall call Building Official for inspection of all foundation steel and excavations prior to placing concrete.

The Building Inspector shall notify the Engineer of any construction that is not in conformance with the Contract Documents. This notification shall be by telephone to (510) 922-9888, including leaving a message at the office of the Engineer as to the nature of the situation, with confirmation in writing. Contractor shall be immediately advised of any construction that, in Inspector's opinion, is not in conformance with the Contract Documents.

01401 CONSTRUCTION OBSERVATION
The project Engineer-of-Record shall perform the structural observations per CBC Section 1710. The Project Engineer shall be retained by the owner to perform these structural observations per CBC Section 1710, reporting any observed deficiencies to the Owner, Contractor, and Building Official, and submitting a final summary report stating site visits have been made, noting any deficiencies, that corrective work has been completed, and that construction proceeded in accordance with the approved plans and applicable codes.

Contractor shall give Engineer 48 hours notice prior to all required testing and observations, U.O.N. Contractor shall call Engineer for observation of all foundation steel and excavations prior to placing concrete. Contractor shall call Engineer for holdown observation prior to sheathing, and framing, nailing and shear wall observation prior to covering either side of sheathing with finished materials. The Contractor shall call Engineer to observe all structural members and connections for conformance with the Construction Documents prior to concealment with finish materials.

The Engineer's visits to the construction site are not intended, nor shall they be construed to include a review of the adequacy of the Contractor's safety measures.

The Engineer is not responsible for construction means, methods, techniques, sequences or procedures of construction safety precautions - these are the sole responsibility of the Contractor.

01402 TYPICAL CONDITIONS
Typical details apply to all construction except where shown differently elsewhere.

01403 SPECIFICATIONS
The specifications shall govern where information is not given in these general structural notes or on the drawings. Where reference is made to standard specifications, the latest adopted revisions shall be used.

01404 SIMILARITY
If certain features are not fully shown or called for on the drawings or specifications, their construction shall be of the same character as similar conditions that are shown or called for.

01405 EQUIPMENT SUPPORTS
Provide mechanical and electrical equipment supports, anchorages, openings, recesses and reveals as required. At concrete, provide these items prior to casting concrete.

01406 EXISTING CONDITIONS
Contractor shall inspect all existing conditions that affect the work shown and shall notify Engineer of any existing conditions which conflict with or differ from the new work shown. Contractor shall not proceed with the work until these conflicts and/or differences are resolved.

01408 BRACING AND SHORING
The Contractor is solely responsible for the conduct of the work, including all construction means, methods, sequencing, and procedures; all bracing and shoring, and all site safety. The Contractor's responsibility for shoring shall include the basic design, assumed soils conditions and estimation of all forces to be resisted together with plans and specifications of the materials and methods to be used, and shall be prepared by a registered Civil Engineer. The Contractor is solely responsible for the structure's temporary stability, including the removal of shoring, backfilling of retaining walls, and any other action which imposes temporary loads on the structure prior to its final stable condition under design loading. The Engineer's site observation visits shall not be interpreted as a review of the Contractor's safety measures.

01420 DESIGN NOTES

01421 CODE
2010 California Building Code (based on International Building Code 2009 Edition).

01422 DESIGN LOADS
Dead loads: in-place material weights with materials as shown in Construction Documents.
Roofs (Flat / Sloping) .... 15 psf
Live loads (reduced per CBC):
Roofs (Flat / Sloping) .... 20 psf
Concentrated loads, per CBC.

Design Wind Pressure (primary frame), Method 2, Projected Area Method, CBC 1609:
Exposure C, Basic Wind Speed 85 mph, I = 1.0 (Occupancy Category II):
To 13' above ground .... 13.5 psf,

Seismic Force, Equivalent Lateral Force Procedure per CBC Section 1613:

Seismic Design Category,..........	E		
Site Class,..........	C		
Occupancy Category II, Importance Factor,..........	I	=	1.0
Fundamental Period,..........	T	=	0.12s
Mapped Short Period Acceleration,..........	Ss	=	2.41g
Site Coefficient,..........	Fa	=	1.0
Design Short Period Acceleration,..........	Sds	=	1.60g
Mapped One Second Period Acceleration,..........	S1	=	0.86g
Site Coefficient,..........	Fv	=	1.3
Design One Second Acceleration,..........	Sd1	=	0.74
Response Modification Factor,..........	R	=	6.5
Base Shear,..........	V	=	0.247W (At Strength Level)
Redundancy Factor,..........	ρ	=	1.3

Allowable Soil Pressures
Conventional Spread Footing and Retaining Walls
Dead + Live Loads,.............................. 2,400 psf
Dead + Live + Lateral Loads.......... 3,600 psf
Slab on Grade
Dead + Live Loads,.............................. 3,500 psf
Dead + Live + Lateral Loads.......... 5,250 psf
Retaining Wall Loads
Active Lateral Earth Pressure
Cantilevered.............................. 45 pcf (2.5:1 backslope)
Passive Earth Pressure.............................. 400 pcf
Friction Factor.............................. 0.39

02000 FOUNDATIONS

02100 FOUNDATION ON GRADE
Clear project area of all organic matter before beginning work. See Geotechnical Report perpared by Cotton, Shires and Associates, INC., (408) 354-5542 dated May 2, 2013. The upper 6'-0" of existing material shall be removed and replaced. If organic material or poor soil is observed excavate foundations until firm undisturbed soil can be found.

02150 RETAINING WALLS
Do not backfill against any concrete or masonry retaining walls until they have achieved design strength. At retaining walls that are backfilled prior to completion of structure, provide bracing as necessary to support retaining walls until adjacent structure has been completed and has achieved design strength. Filter fabric shall be Mirafi 140NC or approved equal and shall totally encase the drain rock.

02352 OBSERVATION AND ACCEPTANCE
The Geotechnical Report prepared by Cotton, Shires and Associates, INC., (408) 354-5542 dated May 2, 2013 is available in Appendices orf Division 0 & 01 for the Contractor's review. The Contractor shall conform to the recommendations of the Geotechnical Report. Obtain Geotechnical Engineer's approval of foundation excavations and pier depths prior to placing reinforcing steel and concrete. All determinations of the acceptability of soil conditions shall be by Geotechnical Engineer. The Geotechnical Engineer shall be present at the site to verify proper depth of over-excavation of poor existing fill material as well as engineered fill recompaction and drilling of all piers and observation of excavation before placing any fill material, steel reinforcing or concrete.

03000 CONCRETE

03001 GENERAL
All concrete shall conform to American Concrete Institute "Specifications for Structural Concrete for Buildings (ACI 301)," with selected ACI and ASTM references, as well as ACI field reference manual, SP-15, except as modified below. (numbers in parentheses refer to corresponding paragraphs of ACI 301).

03200 CONCRETE REINFORCEMENT
Reinforcing bars: ASTM A615, Grade 60 minimum; lap per schedule or 63 bar diameters minimum (5.2;5.57),
welded wire fabric; ASTM A185; lap 22" min (5.2.5),
Do not weld reinforcement (5.3),
Concrete protective cover for reinforcement (5.5.1): Contractor shall provide no more and no less than the specified cover for all beam ties, column stirrups, and wall and slab reinforcing.

Detailing and placing: conform with ACI 315, concrete reinforcing steel institute MSP-2, and CRSI "Placing Reinforcing Bars," latest edition (5.1.2).

03250 CONCRETE ACCESSORIES
03251 Capsule : Hilti HVA adhesive anchor as supplied by Hilti, Inc., Tulsa, OK, or approved equivalent, installed in accordance with the manufacturer's written instructions.
03252 Powder-driven Fasteners: as manufactured by Hilti, Inc., Tulsa, OK, or approved equivalent, installed in accordance with the manufacturer's written instructions.
03253 EPOXY ANCHORS
1. Simpson "SET-XP" epoxy anchors as supplied by Simpson Strong-Tie, installed in accordance with the manufacturer's written instructions and ICC-ESR Report 2508, latest edition.
2. Hilti "HIT-HY 200" epoxy anchors as supplied by Hilti, Inc., installed in accordance with the manufacturer's written instructions and ICC-ESR Report 3187, latest edition.
3. Or equivalent as approved by Engineer of Record.

03254 EXPANSION ANCHORS:
1. Simpson "Strong-Bolt" expansion anchor as supplied by Simpson Strong-Tie, installed in accordance with the manufacturer's written instructions and ICC-ESR Report 1771, latest edition.
2. Hilti "Kwik Bolt-TZ" expansion anchor as supplied by Hilti, Inc., installed in accordance with the manufacturer's written instructions and ICC-ESR Report 1917, latest edition.
3. Or equivalent as approved by Engineer of Record.

03255 POWDER ACTUATED FASTENERS:
1. Simpson "PDP" pins as supplied by Simpson Strong-Tie, installed in accordance with the manufacturer's written instructions and ICC-ESR Report 2138, latest edition.
2. Hilti "X-DNI" pins as supplied by Hilti, Inc., installed in accordance with the manufacturer's written instructions and ICC-ESR Report 1663, latest edition.
3. Or equivalent as approved by Engineer of Record.

03300 CAST-IN-PLACE CONCRETE

03301 GENERAL
Minimum Compressive Strength, f'c at 28 days for fly ash replacement concrete (3.2): 3,000 psi
Maximum slump (3.5): .... 4"
Maximum water to cement ratio: 0.45
Replace a minimum of 20% and a maximum of 35% of cement content with fly ash conforming to ASTM C618 Class C or F.
Aggregate shall be 1" x #4 coarse, clean, uncoated, processed aggregate containing no clay, mud, loam or foreign matter, as follows:
a. Crushed stone, processed from natural rock or stone.
b. Natural or crushed gravel. Do not use pit, bank run, or pea gravel.
Use no calcium chloride in any concrete (3.7.1).
Provide internal vibration of all concrete (8.3.4)
Hot weather concreting: conform to recommendations contained in "Hot Weather Concreting," ACI 305R-10.
Cold weather concreting: conform to recommendations contained in "Cold Weather Concreting," ACI 306R-10.

03302 CURING
Concrete surfaces exposed to the atmosphere within 7 days of placement shall be protected and cured as necessary until specified design strength has been achieved (12.2).
At greater rates of cement replacement with either slag or fly ash the early strength and setting for flat work can be delayed, and in some cases, the 28 day design strength may have to be exceeded to 56 days or more. In either case, the construction needs and schedules will impact the cement replacement percentage.
Care should be taken to ensure that proper curing is maintained for concretes in which slag or fly ash has been substituted for a portion of the Portland cement. With an increased time of set and a reduced rate of strength gain, concretes containing ground granulated blast furnace slag may be more susceptible to cracking caused by drying shrinkage.

03304 SLABS ON GRADE
Place slabs over vapor barrier over 6" clean, free-draining crushed rock over 12 inches (6 inches for exterior concrete flatwork) non-expansive structural fill (95% relative compaction) placed on the prepared subgrade soil. See Geotechnical Report: 6'-0" removed and replaced engineered fill required below foundations and slabs. Slope subgrade to drain. Refer to Specifications Section 07 26 00 - Vapor Retarders for for specific vapor barrier specifications.

03321 CONCRETE FIELD TESTING
1. Concrete Test Samples: Samples for concrete tests shall be taken in accordance with ASTM C 172. Test cylinders shall be cured under conditions not more favorable than the most unfavorable conditions for portions of concrete which specimens represent. Casting and curing on test cylinders shall be the responsibility of the Contractor. Testing of samples shall be carried out by an independent testing agency meeting the requirements of ASTM C 1077.

2. Compressive Strength Tests on concrete:
a. Frequency of concrete sampling: For concrete (A) at or below grade, B) above grade and not part of the lateral force resisting system, C) which is part of the lateral force resisting system (shear walls, moment frames, transfer beams, diaphragms, etc.) Samples for concrete compressive strength tests of each class of concrete placed each day shall be taken not less than once per day or per batch, nor less than once for every (A)150, B)25, C)10) yd3 of concrete, nor less than once for every (A)5000, B)2000, C)1000) ft2 surface area for slabs or walls. A sample shall consist of (A or B) four, (C) five standard cylinders, one to be tested at 7 days, one to be tested at 14 days, and the remainder to be tested at 28 days, as required.
b. Acceptance of concrete shall be based on strength test results of standard cured cylinders in accordance with ASTM C 31 and tested at 28 days in accordance with ASTM C 39. Strength test results are defined as the average of a minimum of two specimens. Additional specimens for testing may be made at contractor's option and expense.
c. When cylinders are made, tests of slump, air content, temperature, and density shall be made and recorded with the strength test results.

d. Strength of each concrete class shall be deemed satisfactory when the following criterion is met:
No individual compressive-strength test result (i.e. the average of two cylinders minimum) falls below specified compressive strength by more than 500 psi.
e. When compressive strength tests indicate low strength, follow procedure in ACI 318 chapter 5.6.4 *Investigation of low-strength test results*.
f. Submit certified test report of cylinders to Engineer.

05000 STRUCTURAL STEEL

05120 MATERIALS
All structural steel, fabrication and erection methods shall conform to the American Institute of Steel Construction (AISC) "Code of Standard Practice for Steel Buildings and Bridges," June, 2010. Where applicable, all cross sectional dimensions and production tolerances shall meet ASTM A6.

Rolled steel angles and channels: ASTM A36, minimum yield stress fy=36 ksi or ASTM A572,minimum yield stress fy=50 ksi
Rolled steel plates and bars: ASTM A572, minimum yield stress fy=50 ksi
Rolled steel W and WT sections: ASTM A992, minimum yield stress fy=50 ksi
Round steel smooth rod: ASTM A36, minimum yield stress fy=36 ksi
Steel pipe: ASTM A53, Type E or S, Grade B, minimum yield stress fy=35 ksi
HSS rectangular section: ASTM A500, Grade B, minimum yield stress fy=46 ksi
HSS round section: ASTM A500, Grade B, minimum yield stress fy=42 ksi
Weathering steel: ASTM A588 or ASTM A847, Grade B, minimum yield stress fy=46 ksi
Structural shapes shall be spliced only as shown on the drawings.
Steel shall be primed with "10-99 Tnemec primer," or "Rustoleum No. 5769 primer," or approved equal.

05121 CONNECTIONS
All bolted connections shall conform to the AISC and shall use high strength threaded fasteners UON.
Anchor Bolts: ASTM F1554 - 55ksi yield strength, provide washers under nuts and heads. All anchor bolts in contact with treated wood with high copper content shall be stainless steel, hot dipped galvanized G-185 coated, or corrosion resistant polymer coated.
Unfinished Threaded Fasteners: ASTM A307, Grade A, regular low carbon steel bolts and nuts.
High Strength Threaded Fasteners: ASTM A325, heavy hexagonal structural diameter.
Bolts: heavy hexagonal nuts, and hardened washers.
Holes shall be cut, drilled or punched to a diameter 1/16" larger than the bolt holes. Holes shall not be burned or enlarged by flame cutting.

05122 WELDING
Welding shall conform to the provisions of the American Welding Society "Structural Welding Code-Steel (ANSI/AWS D1.1/D1.1M:2008);" and shall be performed by AWS qualified welders, and inspected by a AWS certified welding inspector. All welding shall use 70 ksi nominal classification tensile strength with low hydrogen electrodes and matching filler material.

05130 BASE PLATES
Bearing plates shall be clean and free from bond-reducing materials, to improve bond during concrete pour. Tighten anchor bolts after the supported members have been positioned and plumbed. Pack 5000 PSI non-shrink grout solidly between bearing surfaces and bases or plates to assure that no voids remain.

06000 STRUCTURAL WOOD

06050 FASTENERS AND ADHESIVES
Nails: if splitting occurs during nailing, predrill wood with hole size one size smaller than nail diameter. All fasteners in contact with pressure treated wood shall be stainless steel, hot dipped galvanized or corrosion resistant polymer coated.

Lag bolts: predrill full shank diameter for shank; predrill 60-75 percent of shank diameter for threaded portion.

Bolts: drill 1/16" oversize lead holes in wood and steel. Do not force bolts into misaligned or undersigned holes.

06051 HARDWARE
Provide framing hardware as shown and at top and bottom of all posts; provide sizes to fit members; nail fully. Provide Simpson Strong-Tie Co., Inc., hardware as shown or approved equivalent. All prefabricated metal connectors in contact with pressure treated wood are to be Simpson Zmax or Simpson HDG coated or are to have an equivalent G185 zinc coating, per ASTM A 153.

Fasteners for preservative-treated and fire-retardant-treated wood shall be of hot diped zinc-coated galvanized steel, stainless steel, silicon bronze, or copper. The coating weights for zinc-coated fasteners shall be in accordance with ASTM A 153.

06052 SHEAR WALL HOLDOWNS
Provide Simpson Strong-Tie Co., Inc., or approved equivalent. Bolts shall not be countersunk.

06053 MISCELLANEOUS STEEL
Steel: ASTM A36, minimum yield stress fy=36 ksi.
Bolts: ASTM A307, provide washers under nuts and heads.
Fabrication shall conform to the American Institute of Steel Construction (AISC) "Code of Standard Practice for Steel Buildings and Bridges," 2010.
Welding shall conform to the American Welding Society "Structural Welding Code-Steel (ANSI/AWS D1.1/D1.1M:2011);" and shall be performed by AWS qualified welders and inspected by AWS certified inspectors.

06100 ROUGH CARPENTRY

06101 FRAMING LUMBER
All lumber shall be FSC Certified and (including pressure treated lumber) shall be Douglas Fir-Larch U.O.N.; grades as follows:
2x and 3x studs..............................stud grade, reclaimed lumber shall be permitted for framing
4x, 6x members.............................. No. 1.
Posts.............................. No. 1.
2x Joists..............................No.2., reclaimed lumber shall be permitted
Other members.............................. No. 2.
Max. Moisture content in all wood members..............19%.

06102 GENERAL FRAMING
Conform to the General Construction Requirements of the CBC, Section 2304. Keep all untreated wood 1/2" minimum away from concrete or masonry. Provide studs or posts full width of beams entering walls; provide solid posts and blocking down to foundation. Connect top and bottom of isolated posts with prefabricated metal connectors. (Simpson BC, UON). At bearing wall openings 4'-0" or narrower: provide 4 x 8 minimum header. Provide 5/8" x 9" minimum anchor bolts @ 4'-0" O.C. maximum U.O.N.

06103 PLYWOOD NAILING
All nails called for in the plans and specifications shall be Common nails. Substitutions will be accepted only if theminimum nail diameter and required nail penetrations shown in the "Typical Common Nail Penetration" Table are satisfied. Nail all plywood panel edges with 10d nails at spacing specified; use 10d nails at 1/2" and thicker plywood. Provide 3/8" minimum edge distances at plywood and at framing members. Drive nails flush with plywood surface; do not fracture surface by overdriving nails; replace overdriven nails in new holes. Stagger nails as possible without violating minimum edge distances. Field nail to intermediate framing members at 12" O.C. maximum.

06104 SHEAR WALLS
Block at plywood joints with blocking same size as studs. Edge nail sheathing to studs at holdowns. Extend shear walls through floor and roof systems with blocking equivalent to shear wall sheathing. At exterior wall top plate splices, lap 4'-0" minimum. Nail splices with 20-10d common, minimum on each side.

06115 SHEATHING

06116 PLYWOOD
APA trademarked plywood conforming to service Report No. ESR-2586; exterior glue; grade and thickness as specified. Center plywood joints on framing member or blocking. Space panels 1/8" at sides and ends. Provide 1/2" space between untreated plywood and concrete or masonry.

PLYWOOD NAILING
All nails called for in the plans and specifications shall be Common nails. Substitutions will be accepted only if the minimum nail diameter and required nail penetrations shown in the "Typical Common Nail Penetration" Table are satisfied. Nail all plywood panel edges with 10d nails at spacing specified; use 10d nails at 1/2" and thicker plywood. Provide 3/8" minimum edge distances at plywood and at framing members. Drive nails flush with plywood surface; do not fracture surface by overdriving nails; replace overdriven nails in new holes. Stagger nails as possible without violating minimum edge distances. Field nail to intermediate framing members at 12" O.C. maximum.

06118 ROOF SHEATHING
1/2" CDX minimum plywood unless otherwise specified on the plans: minimum panel span rating 32/16. Lay with face grain as shown on plans; stagger plywood panels 4'-0" lengthwise; minimum panel dimension; 2'-0", support all plywood edges with 2 x 4 minimum block or panel sheathing clips.

06119 SHEAR WALL SHEATHING
1/2" minimum APA Rated Structural I grade sheathing plywood; apply directly to studs; lay-up with face grain vertical. Block joints with blocking same size as studs, minimum. Edge nail sheathing to all studs containing holdowns. The Contractor and Owner shall take precautions not to penetrate shearwalls with holes for plumbing, HVAC, etc. after shearwalls have been inspected.

06310 TREATED WOOD
Wood in contact with concrete or masonry: preservative-pressure-treated per AWPA Standard U1. Supplier provide certificate of compliance indicating compliance with these AWPA Standards. Borings and cut-offs: treat per AWPA standard M-4. All preservative treatments shall be CBA (Copper Boron Azole, trade name Wolmanized Natural Select) or ACQ (Alkaline Copper Quartenary). CCA treatment shall not be used.

COLUMN ABOVE
COLUMN BELOW
COLUMN ABOVE AND BELOW
H2 COL — HOLDOWN AT COLUMN
1 — KEYED NOTES
3 — SHEARWALL
WALL ABOVE
WALL BELOW
GRADE BEAM
SUSPENDED BEAM
CONCRETE SLAB
CONCRETE WALL
CONCRETE RETAINING WALL
ROOF EDGE
CHANGE IN TOP OF SLAB ELEV.
NEW APPROVED COMPACTED FILL
NEW GRANULAR FILL

TD01

LEGEND

- # - Size of Reinforcing Bar
- (E) - Existing
- (N) - New
- @ - At (Center To Center spacing)
- A.B. - Anchor Bolt
- ABV. - Above
- AC - Asphalt Concrete
- ADDNL. - Additional
- A.F.F. - Actual Finish Floor
- AISC - American Institute of Steel Construction
- ASTM - American Society of Testing and Materials
- AWS - American Welding Society
- B.P. - Base Plate
- BLDG. - Building
- BLKG. - Blocking
- BLW. - Below
- BM - Beam
- B.N. - Boundary Nailing
- BOT. - Bottom
- BTW. - Between
- B.S. - Both Sides
- C.C. - Center-To-Center
- CONST. JNT. - Construction Joint
- CNTRL. JNT. - Control Joint
- C.J.P. - Complete Joint Penetration
- CL - Centerline
- CLR - Clear
- CMU - Concrete Masonry Unit
- COL. - Column
- CONC. - Concrete
- CONN. - Connection
- CONT. - Continuous
- d - Penny (Nail Size)
- DIA or Ø - Diameter
- DBL. - Double
- DET. - Detail
- D.F. - Douglas Fir
- D.G. - Decomposed Granite
- D.S. - Drag Strut
- DWG. - Drawing
- D/W - Driveway
- DXS - Double Extra Strong Steel Pipe
- E.F. - Each Face
- E.J. - Expansion Joint
- E.N. - Edge Nail
- E.S. - Each Side
- E.W. - Each Way
- ELEV. - Elevation
- F.D. - Floor Drain
- F.F. - Finished Floor
- F.G. - Finished Grade
- F.N. - Field Nail
- F.O.C. - Face of Concrete
- F.O.F. - Face of Finish
- F.O.S. - Face of Stud or Structure
- F.O.W. - Face of Wall
- FDN. - Foundation
- FLR. - Floor
- FRMG. - Framing
- F.S. - Far Side
- FSNR. - Fastener
- FTG. - Footing
- G.S.M. - Galvanized Sheet Metal
- GA - Gauge
- GALV. - Galvanized
- GB - Grade Beam
- GLB - Glue-Laminated Beam
- H.P. - High Point
- HD - Hold-Down
- HORZ. - Horizontal
- HSS - Hollow Steel Section
- I.B.C. - International Building Code
- I.F. - Inside Face
- JST - Joist
- L.P. - Low Point
- M.B. - Machine Bolt
- MANF. - Manufacturer
- MAT'L - Material
- MAX. - Maximum
- MIN. - Minimum
- N.I.C. - Not In Contract
- N/A - Not Applicable
- N.T.S. - Not To Scale
- O.C. - On Center
- O.F. - Outside Face
- P.C.C. - Portland Cement Concrete
- P.D.F. - Power Driven Fastener
- P.J. - Pour Joint
- P.P. - Partial Penetration
- P.T. - Pressure Treated
- PL - Plate
- PLYWD. - Plywood
- PTD. - Painted
- RBS - Reduced Beam Section
- R.C.P. - Reflected Ceiling Plan
- R.D. - Roof Drain
- RECM'D. - Recommended
- REINF. - Reinforcement
- REQD. - Required
- R.O. - Rough Opening
- S.A.D. - See Architectural Drawings
- S.C.D. - See Civil Drawings
- SAF - Self Adhering Flashing
- S.F. - Spread Footing
- S.L.A.D. - See Landscape Arch. Drawings
- S.M.D. - See Mechanical Drawing
- S.M.S. - Sheet Metal Screw
- S.O.G. - Slab On Grade
- S.S.D. - See Structural Drawing
- S.S.P. - Standard Steel Pipe
- S.T.S. - Self Taping Screw
- S.W.S. - Shear Wall Schedule
- S.W. - Shear Wall
- SHT. - Sheet
- SIM. - Similar
- SPECS. - Specifications
- SQ. - Square
- STIFF. - Stiffener
- STD. - Standard
- STL. - Steel
- S/W - Sidewalk
- SYM. - Symmetrical
- T&B - Top And Bottom
- T.B. - Tie Beam
- T.O.C. - Top of Concrete
- T.O.J. - Top of Joist
- T.O.S. - Top of Slab
- T.O.W. - Top of Wall
- TYP. - Typical
- U.B.C. - Uniform Building Code
- U.O.N. - Unless Otherwise Noted
- V.I.F. - Verify In Field
- VERT. - Vertical
- W/ - With
- W.D. - Wood
- W.P. - Work Point
- W.R.B. - Water Resistant Barrier
- W.W.F. - Welded Wire Fabric
- XSP - Extra Strong Steel Pipe

TD02

ABBREVIATIONS

Project Title:
City of Cupertino - McClellan Ranch Preserve
Blacksmith Shop Relocation
Re-Bid

Design Firm:
SIEGEL & STRAIN Architects
1295 59th Street
Emeryville, CA 94608
510 / 547-8092
FAX 510 / 547-2604
info@siegelstrain.com

Consultant:
WARE
ARCHITECTURE ENGINEERING
WARE ASSOCIATES
130 Webster Street Suite 105
Oakland CA 94607 USA
T 510 922 9888 F 510 922 9624

Stamp:
REGISTERED PROFESSIONAL ENGINEER
JOHN QUINLAN WARE
No. C 45523
12.14
CIVIL
STATE OF CALIFORNIA

No.	Description	Date

Issue Note:
Construction Documents 01/10/2014

Project ID:	BSS: 13-002
File Name:	
Drawn by:	AG
Checked by:	JW
Plot Date:	01/08/2014
Scale:	1/4" = 1'-0"

Sheet Title:
General Structural Notes

Sheet No.:
S3-0.1

5/31/2013 7:09:16 AM

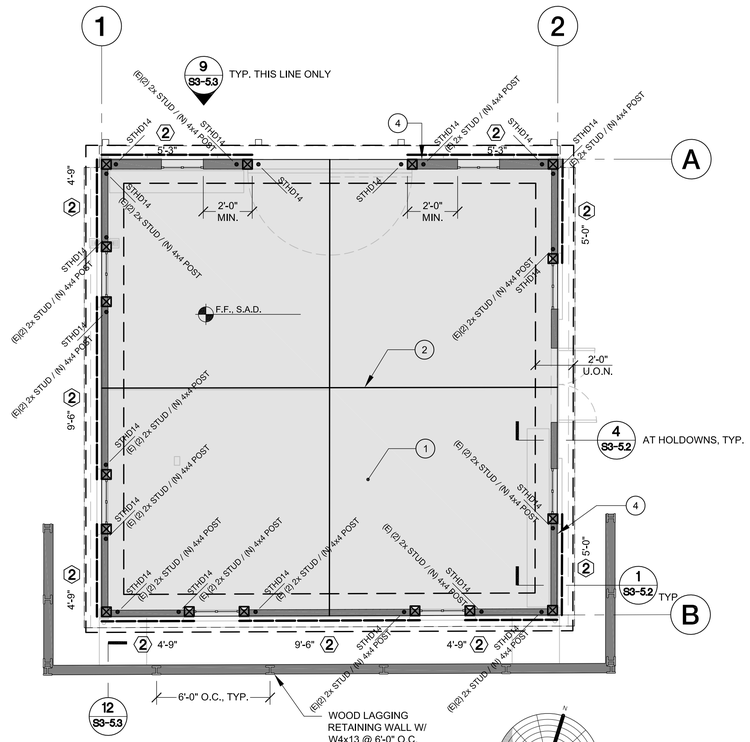

FOUNDATION PLAN

0 1' 2' 4'

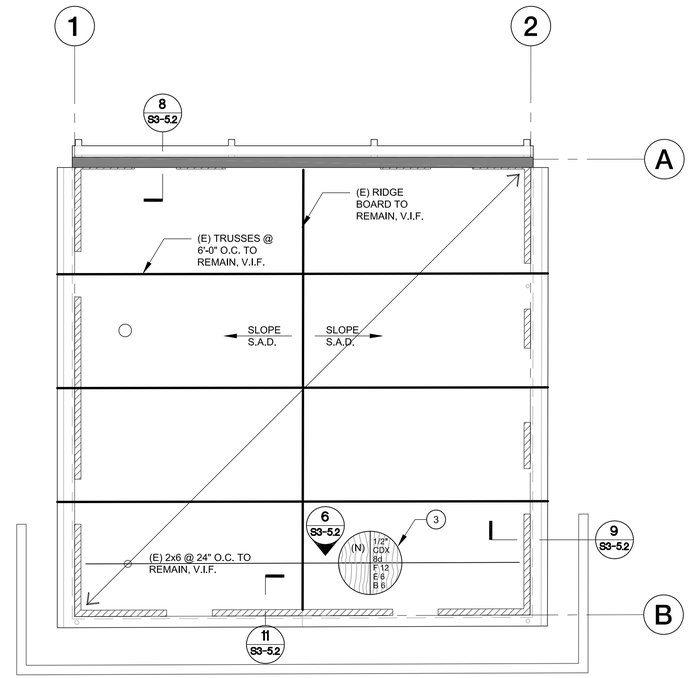

FRAMING PLAN

0 1' 2' 4'

GENERAL NOTES:

1. Detail scales are for reference only. Do not scale from drawings.
2. See sheet S3-5.3 for typical shearwall details and shearwall.
3. See sheet S0.1 for structural notes & abbreviations. See sheets S3-5.1, S3-5.2 & S3-5.3 for typical details.
4. Provide ½" CDX plywood sheathing w/ 8d @ 6" O.C. edge nailing, 8d @12" O.C. field nailing, on all exterior walls U.O.N. on plans as shearwall. For shearwalls, see shearwall schedule, sheet S3-5.3.
5. Not used.
6. Not used.
7. (N) Posts shall be 4x4, U.O.N. For all posts use CBSQ column base, U.O.N.

FOUNDATION NOTES:

1. Dimensions and elevations shown are for reference only and shall not be used for layout. Refer to architectural drawings for layout dimensions and elevations.
2. Prior to the contractor requesting a foundation inspection, the soils engineer shall observe the work and verify that:
   A. The building excavation and building pad was prepared in accordance with the soils report.
   B. The foundation forming and grading comply with the soils report and approved plans.
   C. The drainage system is in accordance with the soils report and approved plans.
3. Contractor shall call Engineer (48 hrs. notice) and building official for observation of all foundation reinforcing and excavation prior to placing concrete.
4. For foundation specifications and additional notes see sheet S3-0.1.
5. Utilities are not shown on these plans. The contractor is responsible for marking all underground and above ground utilities and taking all necessary precautions during construction.
6. All roof drainage shall be diverted away from the building footings in a complete 4" AASHTO H2O rated, 4" HDPE tight line system.
7. All drainage pipes schedule AASHTO H2O rated, NDS N12 4" HDPE smooth wall or equal.
8. S.A.D. for the location and extent of (N) foundation sub-drainage.
9. Slope finished grade along exterior foundations 2% or more away from building.
10. See detail 7/S3-5.2 for sill bolt requirements.
11. Provide 8" dearance between all wood and earth.
12. S.A.D. drawings for duplicate plans.
13. S.A.D. for all floor drain and depression locations.
14. S.A.D. for slab dimensions and finish floor elevation.
15. Per Geotech recommendation, footing should be founded at least 24" below the lowest adjacent final grade. Excavation and preparation of engineered fill shall be per Geotechnical report: 6'-0" of (E) fill shall be removed and replaced with engineered fill below foundations and slabs. See S1-1.0 section 02100 and 03304.

FRAMING NOTES:

1. All exterior framing shall be (E) 2x4 @ 16" O.C. to remain - replace only if rotten. Contractor shall V.I.F. and provide allowance for 10% of members to be replaced. Verify with Architect prior to replacing any wall framing material, V.I.F.

2. See architectural drawings for roof and overhang slopes.

KEYED NOTES:

1. 6" conc. structural slab on a layer of vapor retarder over 6" crushed rock or gravel per Geotechnical Engineer recommendation (see Geotechnical Report for extensive subgrade over excavation and preparation requirements. Provide #4 @ 9" O.C., E.W., centered, shown shaded typ.
2. Control joints @ 12' x 12' max, S.A.D. & see 8/S3-5.1.
3. Plywood sheathing notation, see detail 6/S3-5.3.
4. Add SSP ties by Simpson @ EA full height stud along this grid line, except at holdown studs / post.

Project Title:

City of Cupertino - McClellan Ranch Preserve
Blacksmith Shop Relocation
Re-Bid

Design Firm:
SIEGEL & STRAIN Architects
1295 59th Street
Emeryville, CA 94608
510 / 547-8092
FAX 510 / 547-2604
info@siegelstrain.com

Consultant:
WARE
ARCHITECTURE ENGINEERING
WARE ASSOCIATES
130 Webster Street Suite 105
Oakland CA 94607 USA
T 510 922 9888 F 510 922 9624

Stamp:

No.	Description	Date

Issue Note:

Construction Documents
01/10/2014

Project ID:	BSS: 13-002
File Name:	
Drawn by:	AG
Checked by:	JW
Plot Date:	01/08/2014
Scale:	1/4" = 1'-0"

Sheet Title:

Structural Plans

Sheet No.:

S3-1.0

5/23/2013 1:09:07 PM

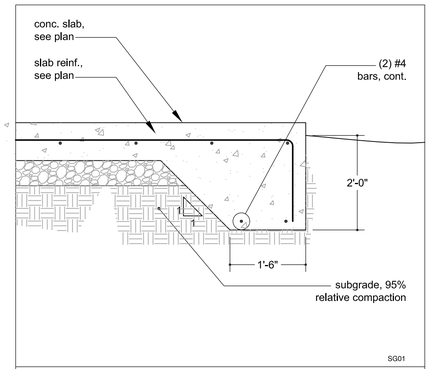

13 TYP. THICKENED SLAB EDGE

0 3 6 12

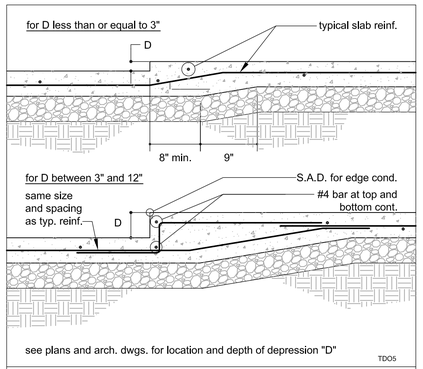

10 TYPICAL DEPRESSED SLAB

0 3 6 12

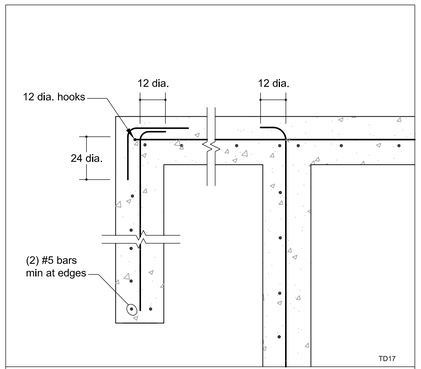

7 SINGLE LAYER CORNER REINFORCING

0 3 6 12

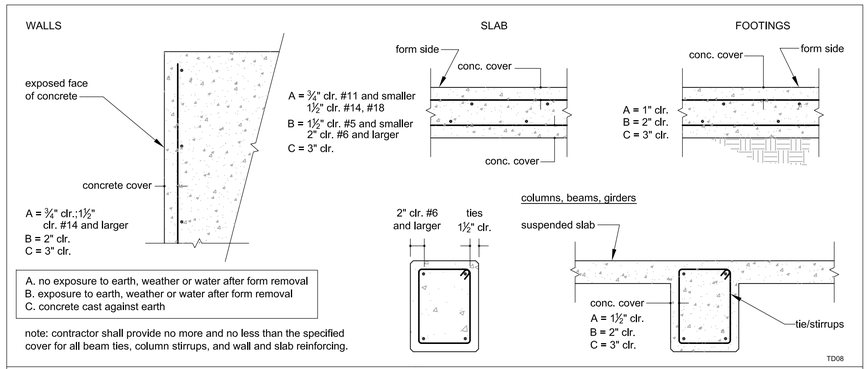

4 TYPICAL CONCRETE COVER

0 3 6 12

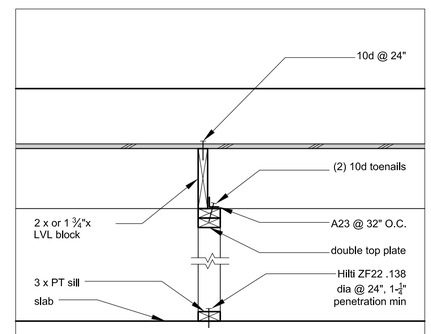

14 TYP. WD. PARTITION FRAMING

0 3 6 12

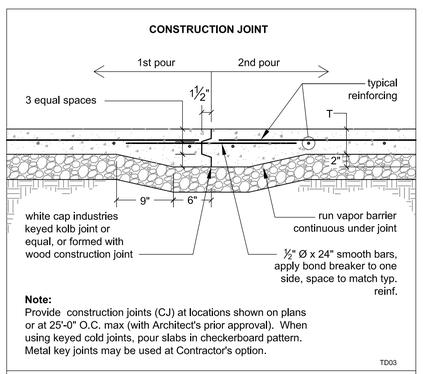

11 CONSTRUCTION JOINT CONC. SLAB-ON-GRADE

0 3 6 12

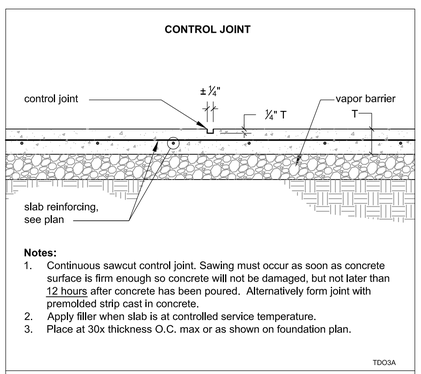

8 CONTROL JOINT CONCRETE SLAB-ON-GRADE

0 3 6 12

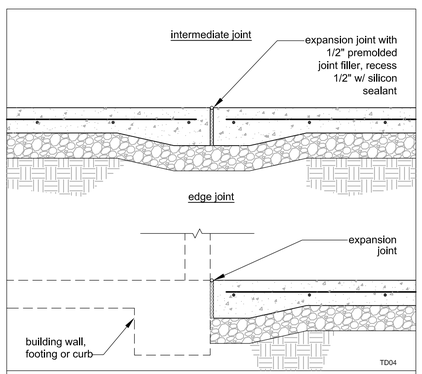

5 TYPICAL EXPANSION JOINT

0 3 6 12

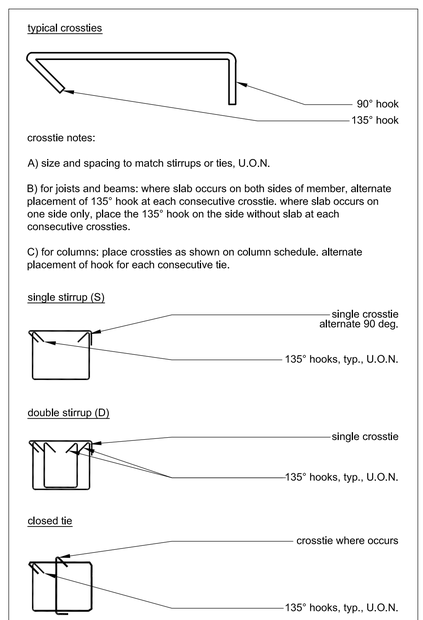

3 TYPICAL STIRRUPS AND TIES

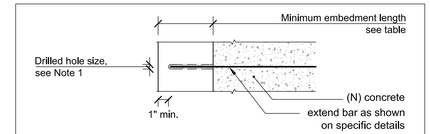

Bar size	Threaded rod size	Minimum embedment length [2,3]
#3	⅜" Ø	4"
#4	½" Ø	5"
#5	⅝" Ø	6"
#6	¾" Ø	8"
#7	⅞" Ø	10"
#8	1" Ø	12"

Notes:
1. Follow specific manufacturer guidelines for drilled hole diameter.
2. Embedment lengths shown on specific details supercede this schedule.
3. Anchor embedment into walls and slabs shall not exceed thickness (in direction of drilling) minus one inch.
4. See specifications for grout requirements. Submit grout technical information to structural engineer for approval.

TD49

15 GROUTED ANCHOR SCHEDULE

0 6" 1' 2'

CONCRETE STRENGTH PSI	BAR TYPE	BAR SIZE																	
		#3		#4		#5		#6		#7		#8		#9		#10		#11	
		CLASS		CLASS		CLASS		CLASS		CLASS		CLASS		CLASS		CLASS		CLASS	
		A	B	A	B	A	B	A	B	A	B	A	B	A	B	A	B	A	B
2500	TOP BAR	24	31	32	41	39	51	47	61	69	89	78	102	88	115	100	129	110	143
	ALL OTHER BARS	18	24	24	32	30	39	36	47	53	69	60	78	68	88	77	100	85	110
3000	TOP BAR	22	28	29	37	36	47	43	56	63	81	72	93	81	105	91	118	101	131
	ALL OTHER BARS	17	22	22	29	28	36	33	43	48	63	55	72	62	81	70	91	78	101
4000	TOP BAR	19	24	25	33	31	41	37	49	54	71	62	81	70	90	78	102	87	113
	ALL OTHER BARS	15	19	19	25	24	31	29	37	42	54	48	62	54	69	60	78	66	87

Notes:
1. Splice length in inches.
2. Use class B for all lap splices except class A may be used for non-structural slabs on grade.
3. Top bars = horizontal bars (other than in walls) placed with more than 12" of fresh concrete cast below bars.
4. Table is based upon minimum clear cover greater than one bar diameter and minimum clear spacing greater than two bar diameters. Where either of these requirement is met, increate lap length by 50%.
5. No more than (2) adjacent bars at same location.
6. Where different bar sizes are spliced in tension, splice length shall be the larger of splice Class A of the larger bar and the tension lap splice length of the smaller bar.
7. Hooked bars development length is 24 bar diameters minimum, U.O.N.

TD50

12 REINFORCING BAR LAP SPLICE SCHEDULE IN CONCRETE

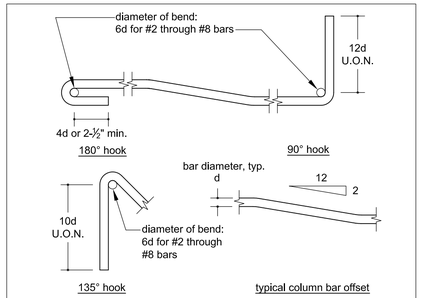

notes:
1. for bars larger than #8 bars, contact engineer for requirements.
2. provide these hooks throughout the work where shown on drawings.
3. all bar bends shall be in accordance CRSI manual of standard practice

TD09

6 TYP. REINF. BENDS, HOOKS AND OFFSET

Project Title:

City of Cupertino - McClellan Ranch Preserve
Blacksmith Shop Relocation
Re-Bid

Design Firm:

SIEGEL & STRAIN Architects
1295 59th Street
Emeryville, CA 94608
510 / 547-8092
FAX 510 / 547-2604
info@siegelstrain.com

Consultant:

WARE ARCHITECTURE ENGINEERING
WARE ASSOCIATES
130 Webster Street Suite 105
Oakland CA 94607 USA
T 510 922 9888 F 510 922 9624

Stamp:

REGISTERED PROFESSIONAL ENGINEER CHUNLAN JIANG No. 42141 CIVIL STATE OF CALIFORNIA

No.	Description	Date

Issue Note:

Construction Documents
01/10/2014

Project ID:	BSS: 13-002
File Name:	
Drawn by:	AG
Checked by:	JW
Plot Date:	01/08/2014
Scale:	AS SHOWN

Sheet Title:

Details

Sheet No.:

S3-5.1

5/29/2013 11:42:37 AM

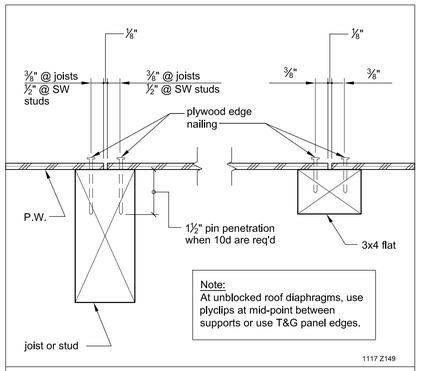

13 TYP. PLYWOOD PANEL EDGE / BOUNDARY DETAIL

0 3 6 12

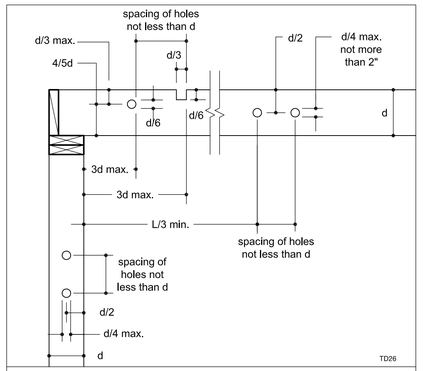

10 TYPICAL HOLES AND NOTCHES

0 3 6 12

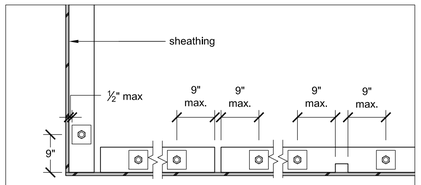

Typical anchor bolts are 5/8" min. dia embedded at least 7" into concrete and spaced not more than 4'-0" apart, with two bolts per sill plate piece, each one not more than 12" or less than 7 bolt diameters from sill plate end. All anchor bolts shall be provided with 0.229" thick min. plate washers, 3" SQ. at 2x4 walls, 5" SQ. at 2x6 walls.

Where plate is drilled or notched more than 1/3 width of plate, sill bolts shall be placed 9" on each side of cut. Plates less than 6" in width shall not be drilled or notched other than for sill bolts. Anchor bolts in contact with treated wood shall be stainless steel, hot dipped galvanized G-185 coated, or corrosion resistant polymer coated.

TD24

7 TYPICAL SILL BOLTING LAYOUT

0 3 6 12

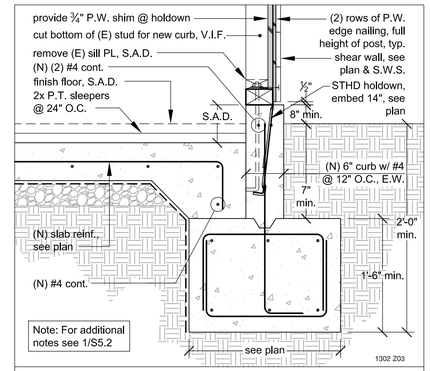

4 HOLDOWN OVER STEM WALL

0 3 6 12

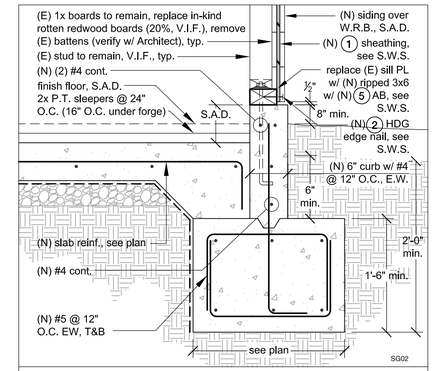

1 SHEARWALL AT SLAB EDGE OVER CURB

0 3 6 12

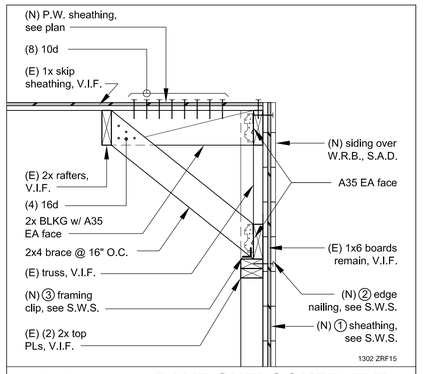

11 RAKE OUTLOOKER, TYP.

0 3 6 12

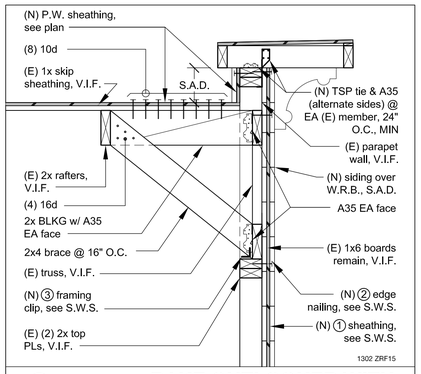

8 RAKE OUTLOOKER WITH PARAPET

0 3 6 12

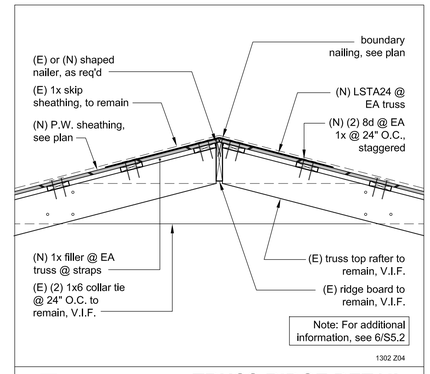

5 TRUSS RIDGE DETAIL

0 3 6 12

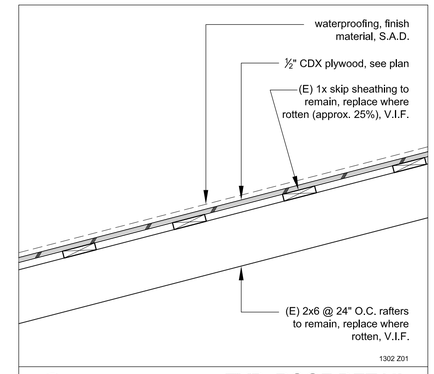

2 TYP. ROOF DETAIL

0 2 4 8

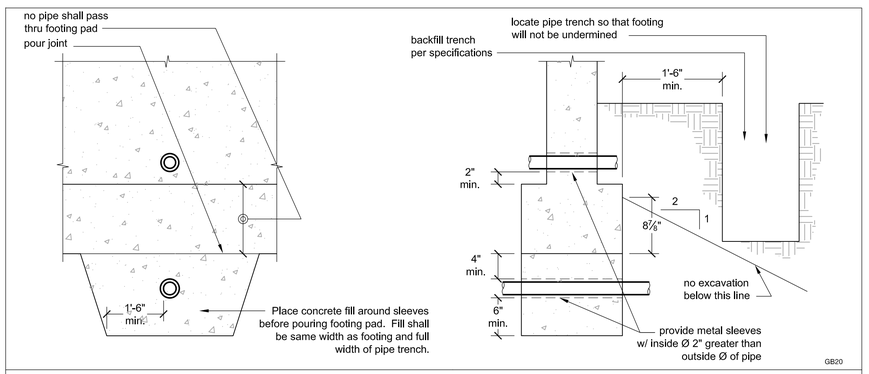

15 RELOCATION OF PIPES & TRENCHES TO SPREAD FOOTING

0 3 6 12

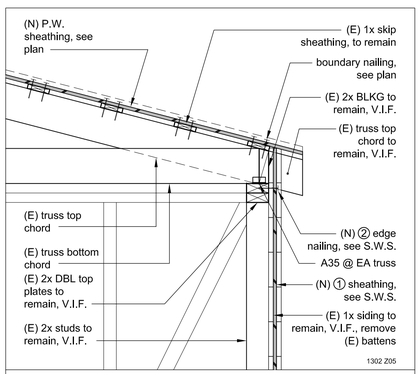

9 EAVE OVER SHEAR WALL

0 3 6 12

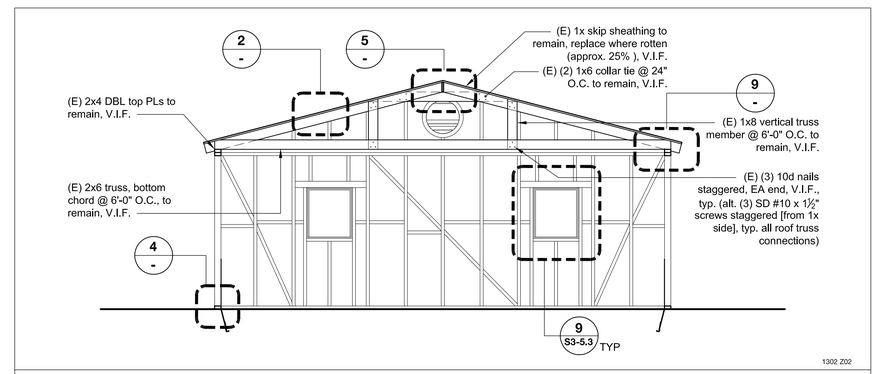

6 TRUSS ELEVATION

0 1' 2' 4'

Project Title:

City of Cupertino - McClellan Ranch Preserve
Blacksmith Shop Relocation
Re-Bid

Design Firm:
SIEGEL & STRAIN Architects
1295 59th Street
Emeryville, CA 94608
510 / 547-8092
FAX 510 / 547-2604
info@siegelstrain.com

Consultant:
WARE
ARCHITECTURE ENGINEERING
WARE ASSOCIATES
130 Webster Street Suite 105
Oakland CA 94607 USA
T 510 922 9888 F 510 922 9624

Stamp:

No.	Description	Date

Issue Note:

Construction Documents
01/10/2014

Project ID:	BSS: 13-002
File Name:	
Drawn by:	AG
Checked by:	JW
Plot Date:	01/08/2014
Scale:	AS SHOWN

Sheet Title:

Details

Sheet No.:

S3-5.2

5/30/2013 1:42:36 PM

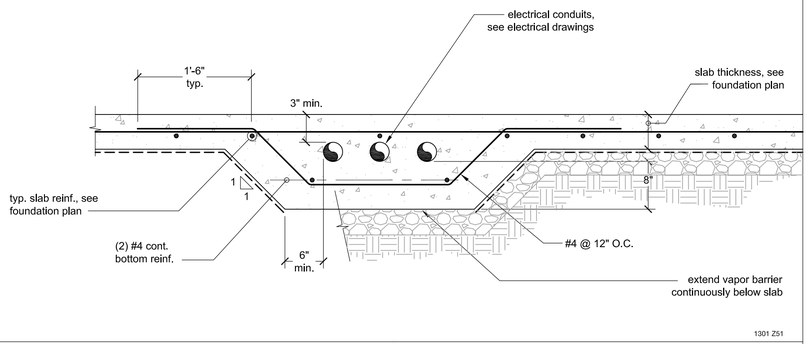

13 CONDUIT PENETRATION IN SLAB ON GRADE

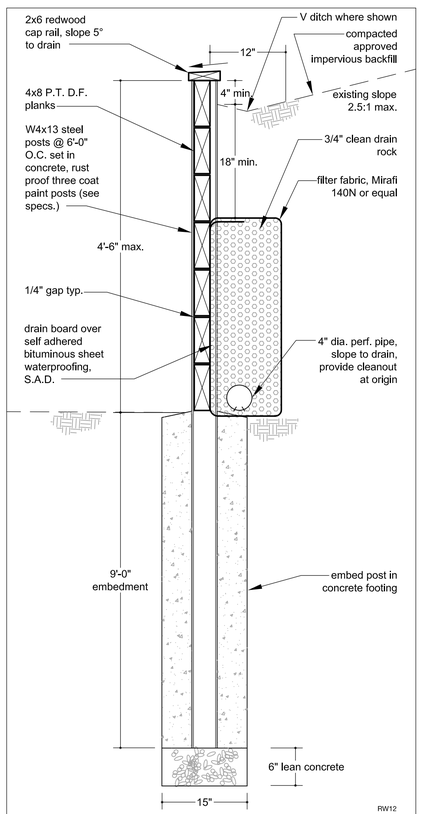

12 WOOD RETAINING WALL

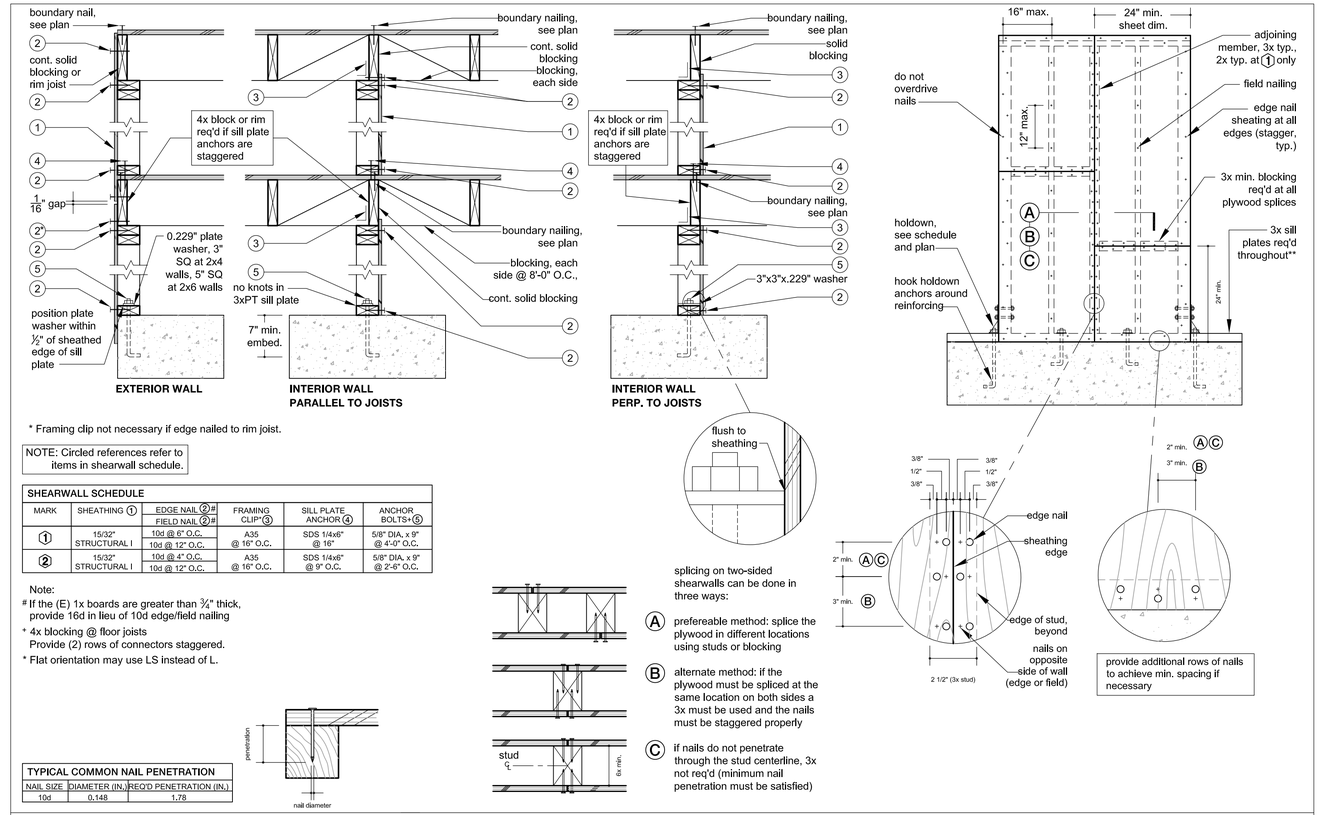

* Framing clip not necessary if edge nailed to rim joist.

NOTE: Circled references refer to items in shearwall schedule.

SHEARWALL SCHEDULE					
MARK	SHEATHING 1	EDGE NAIL 2 # / FIELD NAIL 2 #	FRAMING CLIP# 3	SILL PLATE ANCHOR 4	ANCHOR BOLTS+ 5
1	15/32" STRUCTURAL I	10d @ 6" O.C. / 10d @ 12" O.C.	A35 @ 16" O.C.	SDS 1/4x6" @ 16"	5/8" DIA. x 9" @ 4'-0" O.C.
2	15/32" STRUCTURAL I	10d @ 4" O.C. / 10d @ 12" O.C.	A35 @ 16" O.C.	SDS 1/4x6" @ 9" O.C.	5/8" DIA. x 9" @ 2'-6" O.C.

Note:
If the (E) 1x boards are greater than ¾" thick, provide 16d in lieu of 10d edge/field nailing
\+ 4x blocking @ floor joists
Provide (2) rows of connectors staggered.
* Flat orientation may use LS instead of L.

TYPICAL COMMON NAIL PENETRATION		
NAIL SIZE	DIAMETER (IN.)	REQ'D PENETRATION (IN.)
10d	0.148	1.78

splicing on two-sided shearwalls can be done in three ways:

(A) prefereable method: splice the plywood in different locations using studs or blocking

(B) alternate method: if the plywood must be spliced at the same location on both sides a 3x must be used and the nails must be staggered properly

(C) if nails do not penetrate through the stud centerline, 3x not req'd (minimum nail penetration must be satisfied)

8 TYPICAL SHEARWALL SCHEDULE

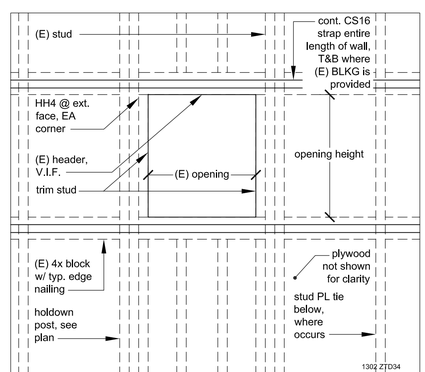

9 PERFORATED SHEAR WALL OPENING

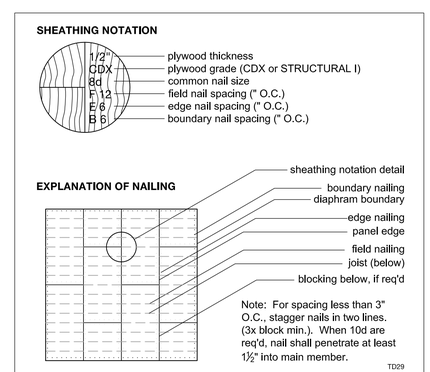

6 SHEATHING NOTATION

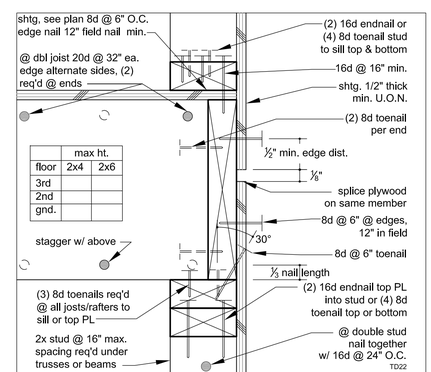

3 MIN. NAILING STANDARDS

Project Title:

City of Cupertino - McClellan Ranch Preserve
Blacksmith Shop Relocation
Re-Bid

Design Firm:
SIEGEL & STRAIN Architects
1295 59th Street
Emeryville, CA 94608
510 / 547-8092
FAX 510 / 547-2604
info@siegelstrain.com

Consultant:
WARE ARCHITECTURE ENGINEERING
WARE ASSOCIATES
130 Webster Street Suite 105
Oakland CA 94607 USA
T 510 922 9888 F 510 922 9624

Stamp:

No.	Description	Date

Issue Note:
Construction Documents
01/10/2014

Project ID:	BSS: 13-002
File Name:	
Drawn by:	AG
Checked by:	JW
Plot Date:	01/08/2014
Scale:	AS SHOWN

Sheet Title:
Details

Sheet No.:
S3-5.3

5/31/2013 5:49:36 AM

HVAC ABBREVIATIONS

A	
ACFM	ACTUAL CUBIC FEET PER MINUTE
ACU	AIR CONDITIONING UNIT
AD	AIR DRYER
AFF	ABOVE FINISHED FLOOR
AHU	AIR HANDLING UNIT
AMFS	AIR MEASURING FLOW STATION
AMP	AMPERE
AL	ALUMINUM
AP	ACCESS PANEL
ARCH	ARCHITECT
AS	AIR SEPARATOR
ASME	AMERICAN SOCIETY OF MECHANICAL ENGINEERS
ASTM	AMERICAN SOCIETY FOR TESTING AND MATERIALS
AV	AIR VENT
AW	ACID WASTE
B	
B	BOILER
BBD	BOILER BLOW DOWN
BDD	BACKDRAFT DAMPER
BF	BAG FILTER
BHP	BRAKE HORSEPOWER
BHT	BASEBOARD HEATER
BLDG	BUILDING
BM	BEAM
BMS	BUILDING MONITORING & CONTROL SYSTEM
BOD	BOTTOM OF DUCT
BOP	BOTTOM OF PIPE
BOS	BOTTOM OF STEEL
BTU	BRITISH THERMAL UNITS
BV	BALL VALVE
BYV	BUTTERFLY VALVE
C	
C	COMPRESSOR
CAP	CAPACITY
CAV	CONSTANT AIR FLOW
CBC	CALIFORNIA BUILDING CODE
CC	COOLING COIL
CD	CONTROL DAMPER OR OR CONDENSATE DRAIN
CEG	CEILING EXHAUST GRILLE
CDWR	CONDENSATE WATER RETURN
CDWS	CONDENSATE WATER SUPPLY
CFF	CAP FOR FURTURE
CFM	CUBIC FEET PER MINUTE
CH	CHILLER
CHV	CHECK VALVE
CHWR	CHILLED WATER RETURN
CHWS	CHILLED WATER SUPPLY
CI	CAST IRON
CL	CENTER LINE
CLG	CEILING
CMC	CALIFORNIA MECHANICAL CODE
CO	CLEAN OUT
COL	COLUMN
CONC	CONCRETE
COND	CONDENSATE
CONN	CONNECTION
CONT	CONTINUATION
CP	CONTROL PANEL OR CONDENSATE PUMP
CPF	CHEMICAL POT FEEDER
CR	CONDENSATE RETURN
CRR	CEILING RETURN REGISTER
CS	CARBON STEEL
CSD	CEILING SUPPLY DIFFUSER
CT	COOLING TOWER
CTE	CONNECT TO EXISTING
CU	COPPER
CU FT	CUBIC FEET
CV	CONSTANT VOLUME OR CONTROL VALVE
CW	COLD WATER
D	
DB	DRY BULB
DDC	DIRECT DIGITAL CONTROL
DEFL	DEFLECTION
DF	DRINKING FOUNTAIN
DGP	DATA GATHERING PANEL
DH	DUCT HEATER OR DEHUMIDIFIER
DI	DUCTILE IRON
DIA	DIAMETER
DIFF	DIFFERENCE
DIM	DIMENSION
DN	DOWN
DPT	DEW POINT TEMPERATURE
DS	DOWN SPOUT
DSD	DUCT SMOKE DETECTOR
DV	DIAPHRAM VALVE
DWG	DRAWING
DX	DIRECT EXPANSION
E	
(E)	EXISTING
EA	EXHAUST AIR OR EACH
EAD	EXHAUST AIR DAMPER
EAT	ENTERING AIR TEMP.
EDB	ENTERING DRY BULB TEMPERATURE
EE/S	EMERGENCY EYEWASH/SHOWER
EF	EXHAUST FAN
EFF	EFFICIENCY
EJ	EXPANSION JOINT
EL	ELEVATION
ELEC	ELECTRICAL
EMS	ENERGY MANAGEMENT SYSTEM
(ER)	EXISTING TO BE RELOCATED
ESP	EXTERNAL STATIC PRESSURE
ET	EXPANSION TANK
EW	EMERGENCY EYEWASH
EWB	ENTERING WET BULB TEMPERATURE
EWC	ELECTRIC WATER COOLER
EWT	ENTERING WATER TEMP.
EXH	EXHAUST
EXT	EXTERNAL
F	
F	FARENHEIT OR FILTER
(F)	FUTURE
FA	FIRE ALARM
FC	FLEXIBLE CONNECTION
FCO	FLOOR CLEANOUT
FCU	FAN COIL UNIT
FD	FLOOR DRAIN OR FIRE DAMPER
FF	FINAL FILTER
FFE	FINISHED FLOOR ELEVATION
FI	FILTER
FLR	FLOOR
FM	FLOW METER
FOB	FLAT ON BOTTOM
FOT	FLAT ON TOP
FPM	FEET PER MINUTE
FS	FLOW SWITCH
FSD	FIRE/SMOKE DAMPER
FT	FEET
G	
G	GAS
GA	GAUGE
GAL	GALLON
GALV	GALVANIZED STEEL
GC	GAS COCK
GLV	GLOBE VALVE
GN	GENERAL NOTE
GPH	GALLONS PER HOUR
GPM	GALLONS PER MINUTE
GR	GRADE
GRD	GROUND
GV	GATE VALVE
GX	GENERAL EXHAUST
H	
H	HEIGHT
HB	HOSE BIBB
HC	HEATING COIL
HD	HEAD FEET OF WATER
HORIZ	HORIZONTAL
HP	MOTOR HORSEPOWER
HPC	HIGH PRESSURE CONDENSATE
HPS	HIGH PRESSURE STEAM
HR	HOUR(S)
HS	HUMIDITY SENSOR
HV	HOSE VALVE
HVAC	HEATING, VENTILATING AND AIR CONDITIONING
HW	HOT WATER
HWS	HOT WATER SUPPLY
HWR	HOT WATER RETURN
HX	HEAT EXCHANGER
HZ	FREQUENCY (HERTZ)
I	
ID	INSIDE DIAMETER
IN.	INCHES
K	
KW	KILOWATT
KWH	KILOWATT HOUR
L	
L	LENGTH
LAT	LEAVING AIR TEMPERATURE
LAV	LAVATORY
LB/LBS	POUNDS (WEIGHT)
LDB	LEAVING DRY BULB TEMPERATURE
LF	LINEAR FEET
LPC	LOW PRESSUE CONDENSATE
LPS	LOW PRESSURE STEAM
LWB	LEAVING WET BULB
LWT	LEAVING WATER TEMPERATURE
M	
MA	MIXED AIR
MAD	MIXED AIR DAMPER
MAU	MAKEUP AIR UNIT
MAX	MAXIMUM
MBH	THOUSAND BTU PER HOUR
MCC	MOTOR CONTROL CENTER
MD	MOTORIZED DAMPER
MECH	MECHANICAL
MFR	MANUFACTURER
MIN	MINIMUM
MPC	MEDIUM PRESSURE CONDENSATE
MPS	MEDIUM PRESSURE STEAM
MS	MOP SINK
MVD	MOTORIZED VOLUME DAMPER
MVM	MANUAL VENT MOTOR
N	
(N)	NEW
N/A	NOT APPLICABLE
NC	NORMALLY CLOSED
NFPA	NATIONAL FIRE PROTECTION ASSOC.
NG	NATURAL GAS
NIC	NOT IN CONTRACT
NO	NORMALLY OPEN OR # NUMBER
NPS	NATIONAL PIPE SIZE
NPSH	NET POSITIVE SUCTION HEAD
NPT	NATIONAL PIPE THREAD
NTS	NOT TO SCALE
O	
OA	OUTSIDE AIR
OAD	OUTSIDE AIR DAMPER
OAT	OUTSIDE AIR TEMPERATURE
OBD	OPPOSED BLADE DAMPER
OD	OUTSIDE DIAMETER
OPNG	OPENING
OS&Y	OUTSIDE SCREW AND YOKE
OV	OUTLET VELOSITY
P	
P	PUMP
PC	PUMPED CONDENSATE
PD	PRESSURE DROP
PF	PREFILTER
PFF	PLUG FOR FURTURE
PG	PIPE GUIDE OR PRESSURE GAGE
PH	PHASE (ELECTRICAL)
PHC	PREHEAT COIL
PLBG	PLUMBING
POC	POINT OF CONNECTION
PRESS	PRESSURE
PRV	PRESSURE REDUCING VALVE
PS	PRESSURE SENSOR
PSI	POUNDS PER SQUARE INCH
PSIA	PSI - ABSOLUTE
PSIG	PSI - GAUGE
PVC	POLYVINYL CHLORIDE
Q	
QTY	QUANTITY
R	
R	RISERS OR RELOCATE OR RISE
(R)	REMOVE
RA	RETURN AIR
RAD	RETURN AIR DAMPER
RAH	RECIRC AIR HANDLER
RC	REHEAT COIL
RD	ROOF DRAIN
RD	REFRIGERANT DISCHARGE
RDO	OVERFLOW DRAIN
REF	ROOF EXHAUST FAN
REQ'D	REQUIRED
RF	RETURN FAN
RH	RELATIVE HUMIDITY
RHC	REHEAT COIL
RHT	RADIANT HEATER
(RL)	RELOCATE
RL	REFRIGERANT LIQUID
RM	ROOM
RPBFP	REDUCED PRESSURE BACKFLOW PREVENTER
RPM	REVOLUTIONS PER MINUTE
RS	REFRIGERANT SUCTION
S	
S	SUPPLY
SA	SUPPLY AIR
SAD	SEE ARCHITECT'S DRAWINGS
SC	SCRUBBER
SCFM	STANDARD CUBIC FEET PER MINUTE
SCHD	SCHEDULE
SD	SMOKE DETECTOR
SF	SUPPLY FAN
SHC	SQUARE HEAD COCK
SIM	SIMILAR
SL	SLOPE
SMACNA	SHEET METAL AND AIR CONDITIONING CONTRACTORS NATIONAL ASSOCIATION
SMEF	SMOKE EXHAUST FAN
SP	STATIC PRESSURE
SPEC(S)	SPECIFICATION(S)
SS	STAINLESS STEEL
ST	SOUND TRAP OR STRAINER
STD	SPLITTER DAMPER OR STANDARD
STD(S)	STANDARD(S)
SV	STEAM VENT
T	
T	TEMPERATURE INDICATOR
TCP	TEMPERATURE CONTROL PANEL
TD	TRANSFER DUCT
TDH	TOTAL DYNAMIC HEAD
TDS	TOTAL DISSOLVED SOLIDS
TE	TEMPERATURE ELEMENT
TEMP	TEMPERATURE
TI	TENANT IMPROVEMENT
TOP	TOP OF PIPE
TOS	TOP OF STEEL
TP	TRAP PRIMER
TRG	TRANSFER GRILLE
TS	TEMPERATURE SENSOR
TT	TEST TAP
TX	TOILET EXHAUST
TXV	THERMAL EXPANSION VALVE
TYP	TYPICAL
U	
U	HEAT TRANSFER COEFFICIENT
UG	UNDERGROUND
UH	UNIT HEATER
UNO	UNLESS NOTED OTHERWISE
UR	URINAL
UTR	UP THROUGH ROOF
V	
V	VENT OR VOLT
VAV	VARIABLE VOLUME TERMINAL UNIT
VB	VACUUM BREAK
VC	VACCUM BREAKER
VD	VOLUME DAMPER
VER	VERTICAL
VFD	VARIABLE FREQUENCY DRIVE
VFM	VENTURI FLOW METER
VTR	VENT THRU ROOF
VVR	VARIABLE VOLUME UNIT WITH REHEAT
W	
W	WASTE OR WIDTH
W/	WITH
W/O	WITHOUT
WB	WET BULB
WC	WATER CLOSET
WEG	WALL EXHAUST GRILLE
WG	WATER GAGE
WH	WATER HEATER
WLD	WELDED
WP	WORKING PRESSURE
WRR	WALL RETURN REGISTER
WSR	WALL SUPPLY REGISTER
WT	WEIGHT
X	
XFMR	TRANSFORMER
Z	
Z	ZONE

HVAC LEGEND AND SYMBOLS

SYMBOL (DOUBLE LINE)	DESCRIPTION	SYMBOL (SINGLE LINE)
FC	FLEXIBLE CONNECTION	FC
	FLEXIBLE DUCT RUNOUT TO DIFFUSER	
12x6	DUCT SIZE (WIDTH X DEPTH)	12x6
	DUCT THROUGH BEAM PENETRATION	
R D	DUCT OFFSET (RISE OR DROP)	R D
VD	VOLUME DAMPER	VD
BDD	BACKDRAFT DAMPER	BDD
STD	SPLITTER DAMPER	SD
ED	EXTRACTOR DAMPER	ED
FD FSD	FIRE OR FIRE-SMOKE DAMPER	FD FSD
	SUPPLY DUCT UP	
	SUPPLY DUCT DOWN	
	EXHAUST DUCT UP	
	EXHAUST DUCT DOWN	
	RETURN DUCT UP	
	RETURN DUCT DOWN	
	CROSS SECTION OF EXHAUST AIR DUCT	
	CROSS SECTION OF RETURN AIR DUCT	
	CROSS SECTION OF ROUND DUCT	
	CROSS SECTION OF SUPPLY DUCT	
	DUCT ELBOW WITH TURNING VANES	
	LONG RADIUS DUCT ELBOW WITHOUT TURNING VALVES	
	LONG RADIUS DUCT ELBOW WITH SPLITTER VANE	
14X14 12"Ø	DUCT TRANSITION RECTANGULAR TO ROUND	14X14 12"Ø

SYMBOL (DOUBLE LINE)	DESCRIPTION	SYMBOL (SINGLE LINE)
	TRANSITION, ROUND TO ROUND OR RECTANGULAR TO RECTANGULAR	
	FLARED TAKEOFF (RECTANGULAR DUCT)	
	SPIN-IN FITTING (ROUND BRANCH TAKEOFF FROM RECTANGULAR MAIN)	
	45° LATERAL TAKE OFF (ROUND/OVAL DUCT)	
	45° WYE FITTING	
	90° LATERAL TAKEOFF (ROUND/OVAL DUCT)	
	VARIABLE ANGLE CONICAL TAKEOFF 90° TAKEOFF W/BOOT FITTING (ROUND DUCT)	
	END CAP	
	RECTANGULAR MITERED ELBOW WITH TURNING VANES	
12 X 6	ACOUSTICAL, LINING DUCT DIMENSION IS I.D.	12 X 6
M M	MOTORIZED DAMPER (PARALLEL OR OPPOSED BLADE)	M M
	TRANSFER DUCT	SIZE CFM TD
	CEILING SUPPLY DIFFUSER	
	CEILING SUPPLY DIFFUSER (3-WAY & 2-WAY THROW PATTERN)	
	CEILING RETURN REGISTER	
	CEILING EXHAUST REGISTER	
	ACTIVE CHILLED BEAM	
	WALL SUPPLY GRILLE OR WALL REGISTER	
	WALL RETURN REGISTER	
	LINEAR SLOT DIFFUSER	

MISCELLANEOUS ANNOTATIONS

SYMBOL	DESCRIPTION
RHT	RADIANT HEATER
BHT	BASEBOARD HEATER
CC	COOLING COIL
HC	HEATING COIL
	RADIANT CEILING PANEL
LEV RM # #	LAB EXHAUST VALVE
LSV RM # #	LAB SUPPLY VALVE
ST	SOUND TRAP
DSD	DUCT SMOKE DETECTOR
AD/AP	ACCESS DOOR / ACCESS PANEL
A	AIRCUITY SENSOR
MS	MOISTURE SENSOR
TS	TEMPERATURE SENSOR
T	THERMOSTAT
S CO2	CO2 SENSOR
S	WALL SWITCH
1 M6.01	DETAIL 1, DRAWING M6.01
A M3.01	SECTION A, DRAWING M3.01
HP 1	EQUIPMENT IDENTIFICATION HEAT PUMP UNIT #1
EHX 1	RISER IDENTIFICATION EXHAUST #1
A - -	DIFFUSER GRILLE TAG
	POINT OF CONNECTION
	SUPPLY AIR
	EXHAUST, RETURN OR INTAKE AIR
	REVISION DELTA

HVAC ABBREVIATIONS (CONT.)

DRAWING INDEX

DWG	TITLE
M0-0.1	HVAC LEGEND, SYMBOLS & GENERAL NOTES
M0-0.2	HVAC EQUIPMENT SCHEDULES
M1-2.1	EEC - HVAC FLOOR PLAN
M1-2.2	EEC - RADIANT PIPING PLAN
M1-5.1	HVAC CONTROLS
M1-6.1	HVAC DETAILS
M1-6.2	HVAC DETAILS
M1-6.3	HVAC DETAILS
M1-7.1	TITLE 24
M1-7.2	TITLE 24

GENERAL NOTES

1. ALL REQUIREMENTS IN THE BOOK OF SPECIFICATIONS ARE PART OF THIS CONTRACT. REFER TO THE SPECIFICATIONS FOR INFORMATION NOT SHOWN ON THE DRAWINGS.
2. ALL WORK SHALL BE IN FULL ACCORDANCE WITH APPLICABLE STATE AND FEDERAL CODES, LAWS AND REGULATIONS. ALL WORK AND MATERIALS SHALL BE IN FULL ACCORDANCE WITH THE 2010 TITLE 24 CALIFORNIA CODE OF REGULATIONS, INCLUDING BUT NOT LIMITED TO: 2010 CALIFORNIA BUILDING CODE (PART 2), 2010 CALIFORNIA ELECTRIC CODE (PART 3), 2010 CALIFORNIA MECHANICAL CODE (PART 4), 2010 CALIFORNIA PLUMBING CODE (PART 5), 2010 CALIFORNIA ENERGY CODE (PART 6), 2010 CALIFORNIA FIRE CODE (PART 9), AND 2011 NATIONAL ELECTRIC CODE CITY OF CUPERTINO CODE ADOPTIONS.
3. ALL WORK SHALL BE IN FULL ACCORDANCE WITH THE FOLLOWING CODES, REGULATIONS AND STANDARDS: STATE FIRE MARSHAL REGULATIONS; THE SAFETY ORDERS OF THE DIVISION OF INDUSTRIAL SAFETY; THE NATIONAL ELECTRIC CODE (NEC); THE NATIONAL FIRE PROTECTION ASSOCIATION (NFPA); AMERICAN GAS ASSOCIATION (AGA); OCCUPATIONAL SAFETY AND HEALTH ACT (OSHA); AMERICAN SOCIETY OF HEATING, REFRIGERATION AND AIR-CONDITIONING ENGINEERS (ASHRAE); AMERICAN NATIONAL STANDARDS INSTITUTE (ANSI); AMERICAN SOCIETY OF MECHANICAL ENGINEERS (ASME); SHEET METAL AND AIR CONDITIONING CONTRACTORS NATIONAL ASSOCIATION (SMACNA); AMERICAN SOCIETY FOR TESTING AND MATERIALS (ASTM); INSTALLATION STANDARDS PUBLISHED BY THE INTERNATIONAL ASSOCIATION OF PLUMBING AND MECHANICAL OFFICIALS (IAPMO) AND OTHER APPLICABLE LAWS, CODES, OR REGULATIONS. NOTHING IN THESE PERFORMANCE SPECIFICATIONS SHALL BE CONSTRUED TO PERMIT WORK NOT CONFORMING TO THESE CODES, REGULATIONS AND STANDARDS.
4. ALL MECHANICAL EQUIPMENT, FIXED OR FLEXIBLY MOUNTED, SHALL BE BRACED OR ANCHORED TO COMPLY WITH THE REQUIREMENTS OF TITLE 24.
5. CONTRACTORS SHALL VISIT SITE AND BE FULLY AWARE OF ALL CONDITIONS PRIOR TO SUBMITTING PROPOSAL.
6. CONTRACTOR SHALL OBTAIN AND PAY FOR ALL REQUIRED FEES, PERMITS, AND SPECIAL INSPECTIONS AS REQUIRED BY THE CONTRACT.
7. COORDINATE ALL WORK WITH THE ARCHITECTURAL, STRUCTURAL DRAWINGS AND DRAWING OF OTHER TRADES. INSTALL ALL WORK TO CLEAR NEW AND EXISTING ARCHITECTURAL WORK, STRUCTURAL MEMBERS AND WORK OF OTHER TRADES. NO ITEM SUCH AS PIPE, DUCT, ETC., SHALL BE IN CONTACT WITH ANY EQUIPMENT. ANY ERRORS, OMISSIONS, DISCREPANCIES, DEFICIENCIES, OR CONFLICTS SHALL BE BROUGHT TO THE ATTENTION OF THE GENERAL CONTRACTOR, THE ARCHITECT AND THE ENGINEER PRIOR TO PROCEEDING WITH ANY AFFECTED WORK.
8. COORDINATE ALL CUTTING AND PATCHING WITH THE CM AT RISK. SUBCONTRACTOR SHALL BE RESPONSIBLE FOR ALL CUTTING AND PATCHING REQUIRED FOR HIS WORK. OBTAIN WRITTEN PERMISSION FROM THE ARCHITECT BEFORE PROCEEDING WITH ANY CUTTING OR ALTERATION OF STRUCTURAL MEMBERS.
9. CONTRACTOR SHALL FURNISH AND INSTALL ALL MATERIALS, EQUIPMENT AND LABOR NECESSARY TO ENSURE THE INSTALLATION OF COMPLETE AND FULLY FUNCTIONING SYSTEMS.
10. GUARANTEE ALL WORK AND MATERIALS FOR ONE YEAR FROM DATE OF ACCEPTANCE OF THE PROJECT UNLESS A LONGER GUARANTEE PERIOD IS STIPULATED ELSEWHERE IN THE CONTRACT DOCUMENTS.
11. RESTORE ALL DAMAGE RESULTING FROM YOUR WORK AND LEAVE PREMISES IN CLEAN CONDITION WHEN FINISHED WITH WORK.
12. CONNECT ALL EQUIPMENT FURNISHED UNDER OTHER TRADES AS SHOWN OR AS REQUIRED.
13. REFER TO DIVISION 1 FOR AS-BUILT, OPERATION AND MANUALS, SERVICE CONTRACT GUARANTEE REQUIREMENTS.
14. EACH SYSTEM OF PIPING AND DUCTWORK SHALL BE CLEANED OF ALL FOREIGN MATERIAL AND BURRS AND ROUGH SPOTS PRIOR TO BEING PLACED IN SERVICE AND BEFORE OERATIONAL TESTS ARE PERFORMED.
15. EACH SYSTEM OF PIPING AND DUCTWORK SHALL BE PRESSURE TESTED IN ACCORDANCE WITH RECOGNIZED INDUSTRY STANDARDS.
16. CONTRACTOR SHALL PROTECT THE PUBLIC FROM INJURY DURING THE PROCESS OF WORK BY POSTING WARNING SIGNS, AND INSTALLING GUARD LIGHTS AND BARRICADES.
17. ALL DUCTS, PIPES AND EQUIPMENT SHALL BE CONCEALED ABOVE CEILING, UNLESS OTHERWISE NOTED.
18. MAXIMUM ALLOWABLE LENGTH OF FLEXIBLE DUCT: 5'-0".
19. SEAL AROUND ALL PIPES AND DUCTS PENETRATING FIRE SEPARATIONS WITH NON-COMBUSTIBLE PACKING RETAINED BY METAL COLLARS. ALL RATED ASSEMBLIES SHALL BE U.L. LISTED AND APPROVED BY STATE FIRE MARSHAL.
20. ALL DUCTS PASSING THRU FIRE WALLS SHALL HAVE DAMPERS THAT COMPLY WITH UL STANDARDS 555 AND 555S AND STATE FIRE MARSHAL.
21. SLOPE ALL RUN OUTS TO EQUIPMENT AND RISERS, UP IN THE DIRECTION OF FLOW.
22. SLOPE ALL HEATING WATER, CHILLED WATER AND CONDENSER WATER MAINS AND BRANCHES UP TOWARD VENTED RISERS, ONE INCH IN 100 FEET MINIMUM.
23. PROVIDE A VALVED DRAIN AND HOSE CONNECTION AT THE LOW POINT IN EACH PIPING SYSTEM. PROVIDE MANUAL AIR VENT AT EACH HIGH POINT IN THE PIPING SYSTEM.
24. ALL VALVES AND OTHER PIPING SYSTEM SPECIALTIES SHALL BE FULL LINE SIZES, UNLESS OTHERWISE INDICATED.
25. REDUCTIONS IN PIPE SIZES OF HEATING, CHILLED OR CONDENSER WATER AND WATER SHALL BE MADE WITH ECCENTRIC REDUCERS TOP SIDE FLAT. BUSHING SHALL NOT BE USED. PIPE SIZE REDUCTIONS SHALL BE MADE WITHIN 6" OF CONNECTION TO EQUIPMENT.
26. PROVIDE REMOTE EXTENDED LUBRICATING FITTINGS FOR ALL SYSTEMS SO THAT LUBRICATION CAN BE ACCOMPLISHED WITHOUT OPENING PLENUM DOORS OR EQUIPMENT ACCESS PANELS.
27. HANG RIBBONS EXTENDING TO WITH 6" OF THE CEILING FROM ALL ITEMS REQUIRING ACCESS (EXISTING IN THE AREA OF CONSTRUCTION AND NEW WORK) PRIOR TO INSTALLATION OF CEILING.
28. INSTALL ALL DUCTWORK AND PIPING AS HIGH AS POSSIBLE ABOVE FINISHED FLOOR EXCEPT WHERE NOTED OTHERWISE IN THE DRAWINGS. PROVIDE AND INSTALL ALL NECESSARY OFFSETS TO MAINTAIN MINIMUM 7" CLEARANCE ABOVE FINISHED CEILING EXCEPT WHERE APPROVED BY ARCHITECT.
29. ALL SUPPORTS, SPACE ARRANGEMENTS, EQUIPMENT FOOTPRINTS, AND EQUIPMENT PADS ARE BASED ON PRELIMINARY INFORMATION FROM THE MANUFACTURER. THE CONTRACTOR SHALL BE RESPONSIBLE FOR CHECKING MANUFACTURER DATA AND DRAWINGS FOR CONTRACTOR SUBMITTED EQUIPMENT AND SHALL MAKE MODIFICATIONS REQUIRED.
30. ALL DUCT DIMENSIONS ARE INTERNAL DIMENSIONS SHOWN IN INCHES.
31. FOR PIPING PENETRATION THROUGH RATED WALL AND FLOOR DETAILS, SEE PLUMBING DRAWING.
32. FINAL AIR BALANCE REPORTS SHALL BE PROVIDED TO THE BUILDING INSPECTOR UPON REQUEST.

Project Title:

City of Cupertino - McClellan Ranch Preserve Environmental Education Center Re-Bid

Design Firm:
SIEGEL & STRAIN Architects
1295 59th Street
Emeryville, CA 94608
510 / 547-8092
FAX 510 / 547-2604
info@siegelstrain.com

Consultant:
INTEGRAL GROUP
427 13th Street
Oakland, CA 94612
510 663-2070
510 663-2080 fax
www.integralgroup.com

Stamp:
REGISTERED PROFESSIONAL ENGINEER TYLER BRADSHAW No. M 33496 Exp. 6-30-14 MECHANICAL STATE OF CALIFORNIA

No.	Description	Date

Issue Note:
CONSTRUCTION DOCUMENTS
01/10/2014

Project ID:	11-020
File Name:	
Drawn by:	JC
Checked by:	JC
Plot Date:	01/08/2014
Scale:	NONE

Sheet Title:
HVAC LEGEND, SYMBOLS & GENERAL NOTES

Sheet No.:
M0-0.1

SPLIT SYSTEM FAN COIL UNIT SCHEDULE

DESIGNATION	MFR	MODEL	TYPE	LOCATION	SERVICE	FAN			MOTOR			DX COOLING COIL				REFRIGERANT	ELECTRICAL		OPER. WEIGHT (LBS)	NOTES
						CFM	ESP (IN W.G.)	OSA CFM	DRIVE	HP	MAX BHP	SC (MBH)	TC (MBH)	EAT DB (°F)	LAT DB/WB (°F)		V/Ph/Hz	FAN FLA		
FC-1	MITSUBISHI	SEZ-KD12NA4	DX	MTG ROOM B	MTG ROOM B	247 - 388	0.02-0.2	247 - 388	DIRECT	-	-	-	11.5	95	-	R410A	240/1/60	0.57	50	1, 2, 3
FC-2	MITSUBISHI	SEZ-KD12NA4	DX	STORAGE	MTG ROOM A	247 - 388	0.02-0.2	247 - 388	DIRECT	-	-	-	11.5	95	-	R410A	240/1/60	0.57	50	1, 2, 3
FC-3	MITSUBISHI	MSZ-A09NA	DX	IT	IT	152 - 338	0.0	0	DIRECT	-	-	-	9.0	80	-	R410A	240/1/60	0.76	37	1, 2, 3

1. R-410A REFRIGERANT ONLY.
2. WALL MOUNTED MITSUBISHI THERMOSTAT PAR-30MAAU. PROVIDED BY DIV. 23, WIRED BY DIV. 26.
3. COOLING ONLY UNIT

AIR COOLED CONDENSING UNIT SCHEDULE

DESIGNATION	MANUFACTURER	MODEL	TYPE	LOCATION	SERVICE	COOLING CAPACITY (MBH)	SEER	REFRIGERANT	ELECTRICAL					WEIGHT (LBS)	REMARKS
									COMP KW	FAN FLA	MCA	MOCP	V/Ph/Hz		
CU-1	MITSUBISHI	MXZ-3B30NA-1	DX	OUTDOOR	FC-1, FC-2, FC-3	28.4	16.0	R410A	1.00 - 3.33	0.93	15	-	240/1/60	150	1, 2, 3

1. R-410A REFRIGERANT ONLY.
2. RATED FOR OUTDOOR CONDITIONS OF 95F DB.
3. COOLING ONLY UNIT

LOUVER SCHEDULE

TAG	MFR.	MODEL	LOCATION	SERVICE	SIZE	FRAME DEPTH (IN.)	MIN. FREE AREA (SF)	NOTES
L-1	RUSKIN	ELF6350DMP	STORAGE	CLASSROOM A	34 x 8	6	1.0	1, 2, 3, 4, 6
L-2	RUSKIN	ELF15J	MECH	MECH	10 X 12	1.5	0.3	1, 2, 4, 5
L-3	RUSKIN	ELF6350DMP	TOILET	TOILET/JC, CLASSROOM A	14 X 8	6	0.4	1, 2, 3, 4, 6
L-4	RUSKIN	ELF15J	STORAGE	RANGE HOOD	8 X 12	1.5	-	1, 2, 4, 5, 6
L-5	NOT USED	-	-	-	-	-	-	-
L-6	PANASONIC	ELF15J	CLASSROOM B	CLASSROOM B	34 x 6	1.5	0.7	1, 2, 4, 5, 6
L-7	RUSKIN	ELF6350DMP	TOILET	TOILET	12 X 12	6	0.4	1, 2, 3, 4, 6

1. STATIONARY WALL LOUVER. EXTRUDED ALUMINUM CONSTRUCTION.
2. DRAINABLE, WIND DRIVEN RAIN RESISTANT.
3. 35° BLADE ANGLE.
4. VERIFY LOUVER FINISH W/ ARCHITECT.
5. 45° BLADE ANGLE.
6. INCLUDE BACKDRAFT DAMPER.

FAN SCHEDULE

TAG	MFR.	MODEL	LOCATION	SERVICE	FAN								MOTOR		ELECTRICAL	OPER. WEIGHT (LBS)	NOTES
					CFM	TYPE	DIA. (IN.)	ESP (IN. W.G.)	TSP (IN. W.G.)	RPM	BHP	SONES	DRIVE	W	V/Ph		
EF-1	PANASONIC	FV-05VK3	JC	JC	50	CEILING	4	0.1	-	750	-	0.3	DIRECT	4.5	120/1	12	1, 2,3, 4, 5, 6
EF-2	PANASONIC	FV-08VK3	TOILET	TOILET	80	CEILING	6	0.1	-	832	-	0.3	DIRECT	7	120/1	12	1, 2, 3, 4, 5, 6
EF-3	PANASONIC	FV-10NLF1	MECH	MECH	120	IN LINE	4	0.1	-	1590	-	1	DIRECT	36	120/1	14	1, 2, 3, 5, 6, 7
EF-4	PANASONIC	FV-08VK3	TOILET	TOILET	80	CEILING	6	0.1	-	832	-	0.3	DIRECT	7	120/1	12	1, 2, 3, 4, 5, 6

1. PROVIDE PAINTED WHITE ENAMEL STEEL GRILLE.
2. FAN INTERNALLY ISOLATED.
3. PROVIDE BACKDRAFT DAMPER.
4. PROVIDE FAN INTERLOCK WITH LIGHTING AND OCCUPANCY SENSOR. POWER AND WIRING BY ELECTRICAL.
5. UNIT ACCESS THROUGH FAN GRILLE.
6. ENERGY STAR RATED FAN.
7. FAN TO RUN FROM HEAT RISE, HONEYWELL OR EQUAL.

AIR SOURCE HEAT PUMP SCHEDULE

TAG	MFR.	MODEL	LOCATION	SERVICE	TYPE	COOLING											HEATING									ELECTRICAL		OPER. WEIGHT (LBS)	NOTES
						TOTAL CAPACITY (TON)	EWT (°F)	LWT (°F)	SINK AIR TEMP (°F)	WATER FLOW RATE (GPM)	WPD (PSI)	MIN. EER	IPLV	WPD (IN WG)	KW	A	TOTAL CAPACITY (MBH)	EWT (°F)	LWT (°F)	SOURCE AIR TEMP	WATER FLOW RATE (GPM)	WPD (PSI)	MIN. COP	KW	A	CONDENSER FAN HP	V/Ph		
HP-1	AERMEC	ANK030HA00005	OUTSIDE SOUTH EAST	RM-1, RADIANT FLOORS	WATER	3.62	74.41	64.40	88	8.68	8.56	14.95	14.89	8.56	2.91	14.4	29.0	111.00	120.00	36	6.45	10.31	2.58	3.29	16.31	-	240/1	154	1, 2

1. PROVIDE UNIT COMPLETE WITH INTERNAL STORAGE TANK, EXPANSION TANK, PUMP, STRAINER, AIR VENT AND MODUCONTROLS.
2. PROVIDE WITH VMF-E5 CONTROL PANEL. SEE FLOOR PLANS FOR LOCATION OF PANEL.

RADIANT MANIFOLD SCHEDULE

MANIFOLD	MFCR	MODEL	LOCATION SERVED	AREA SF	COOLING					HEATING					TUBING				FLOW		NOTES
					SETPOINT (F)	FLOOR SURFACE (F)	(BTU/HR/SF)	(BTU/HR)	EWT/LWT	SETPOINT (F)	FLOOR SURFACE (F)	(BTU/HR/ SF)	(BTU/HR)	EWT/LWT	TYPE	SPACING OC	NO. LOOPS	LOOP LENGTH (FT)	GPM	HD LOSS	
RM-1	UPONOR	TRUFLOW MANIFOLD	OFFICE	199	78	69	10.3	2050	61/69	68	84	32.0	6368	110/95	5/8" hePEX	6"	2	300	1.7	6.4'	1,2,3
RM-2	UPONOR	TRUFLOW MANIFOLD	CLASSROOM C	232	78	69	10.3	2390	61/69	68	84	32.0	7424	110/95	5/8" hePEX	6"	2	285	1.6	5.4'	1,2,3
RM-3	UPONOR	TRUFLOW MANIFOLD	CLASSROOM A, B	826	78	69	10.3	8508	61/69	68	84	32.0	26432	110/95	5/8" hePEX	6"	5	300	4.3	3.0'	1,2,4

1. MECHANICAL CONTRACTOR RESPONSIBLE FOR INSTALLATION AND WIRING OF MANIFOLD CONTROL VALVES. NECESSARY TRANSFORMERS TO BE PROVIDED AND INSTALLED BY MECHANICAL CONTRACTOR.
2. 6" CONCRETE SLAB; FINISHED CONCRETE.
3. ASSEMBLY TO INCLUDE 2-LOOP TRUFLOW MANIFOLD ASSEMBLY WITH LOOP BALANCING VALVE AND FLOW METER SIZED PER ABOVE.
4. ASSEMBLY TO INCLUDE 5-LOOP TRUFLOW MANIFOLD ASSEMBLY WITH LOOP BALANCING VALVE AND FLOW METER SIZED PER ABOVE.

DIFFUSER/GRILLE SCHEDULE

TAG	MFR.	MODEL	TYPE	MODULE SIZE	FACE	NOTES
A	TITUS	300	SIDEWALL	34 x 8	LOUVERED	1, 2, 3, 4
B	TITUS	350	SIDEWALL	34 x 8	LOUVERED	1, 2, 3, 4
C	TITUS	350	SIDEWALL	24 x 12	LOUVERED	1, 2, 3, 4
D	TITUS	300	SIDEWALL	34 x 6	LOUVERED	1, 2, 3, 4

1. STEEL CONSTRUCTION.
2. OPPOSED BLADE DAMPER.
3. #26 WHITE FINISH.
4. FRONT BLADE PARALLEL TO SHORT DIMENSION.

Project Title:

City of Cupertino - McClellan Ranch Preserve
Environmental Education Center
Re-Bid

Design Firm:
SIEGEL & STRAIN Architects
1295 59th Street
Emeryville, CA 94608
510 / 547-8092
FAX 510 / 547-2604
info@siegelstrain.com

Consultant:
INTEGRAL GROUP
427 13th Street
Oakland, CA 94612
510 663-2070
510 663-2080 fax
www.integralgroup.com

Stamp:
REGISTERED PROFESSIONAL ENGINEER
TYLER BRADSHAW
No. M 33496
Exp. 6-30-14
MECHANICAL
STATE OF CALIFORNIA

No.	Description	Date

Issue Note:
CONSTRUCTION DOCUMENTS
01/10/2014

Project ID:	11-020
File Name:	
Drawn by:	AM
Checked by:	JC
Plot Date:	01/08/2014
Scale:	NONE

Sheet Title:
HVAC EQUIPMENT SCHEDULES

Sheet No.:
M0-0.2

GENERAL NOTES:

1. DUCT BALANCING DAMPERS ABOVE GYP BOARD CEILINGS TO BE ACCESSIBLE VIA ACCESS PANEL. LOCATION AND FINISH TO BE COORDINATED WITH ARCHITECT.
2. SEE ARCHITECTURAL REFLECTED CEILING PLANS AND INTERIOR ELEVATIONS FOR EXACT LOCATIONS OF DIFFUSERS, GRILLES, AND FANS.
3. PROVIDE ANCHORAGE AND SEISMIC BRACING FOR MECHANICAL AND PLUMBING EQUIPMENT AND SYSTEMS.
4. PROVIDE COMPLETE FIRE AND FIRE SMOKE DAMPER SELECTIONS FOR ALL LOCATIONS INDICATED ON THE DRAWINGS. SEE DIVISION 23 SPECIFICATIONS FOR CONTRACTOR DESIGN AND COORDINATION REQUIREMENTS.
5. ACCESS PANELS SHALL BE 24"x24" TYPICAL. FINAL SIZES AND LOCATIONS SHALL BE DETERMINED IN COLLABORATION WITH THE ARCHITECT. CONTRACTOR IS RESPONSIBLE FOR DETERMINING AN ACCESS PANEL LOCATION AND SIZE THAT ENABLES ACCESS TO EQUIPMENT OR SYSTEMS FOR BALANCING, MAINTENANCE, AND REPLACEMENT, INCLUDING FIRE AND SMOKE DAMPERS. PROVIDE ACCESS PANELS IN WALLS, HARD-LID CEILINGS, AND ALL OTHERWISE INACCESSIBLE AREAS. SUBMIT FINAL COORDINATED ACCESS PLAN DRAWING TO ENGINEER FOR SHOP DRAWING REVIEW PRIOR TO INSTALLATION. REFER TO SPECIFICATIONS 083100 FOR ADDITIONAL REQUIREMENTS.
6. ROUTE HYDRONIC PIPING MAINS ABOVE CEILING. ROUTE HYDRONIC PIPING BRANCHES ABOVE CEILING AND UP/DOWN THROUGH STUD WALL TO CONNECTIONS WITH FAN COIL UNITS.
7. ALL MECHANICAL WORK SHOWN IN DRAWINGS IS DIAGRAMMATICAL ONLY. MECHANICAL CONTRACTOR IS RESPONSIBLE FOR PROVIDING A FULLY FUNCTIONAL MECHANICAL SYSTEM BASED ON THE MECHANICAL DRAWINGS AND SPECIFICATIONS PROVIDED.
8. ALL DUCTWORK AND PIPING TO BE INSULATED ACCORDING TO CODE PER SPECIFICATIONS.
9. SEE GENERAL NOTES ON M0-0.1
10. ALL EXPOSED DUCTWORK SHALL BE PAINTED, S.A.D.

SHEET NOTES:

1. CEILING EXHAUST FAN. DUCT TO EXTERIOR WALL LOUVER.
2. PROVIDE FLEXIBLE DUCT CONNECTOR ON BOTH SIDES OF EQUIPMENT. TRANSITION DUCTS TO MATCH UNIT INTAKE AND DISCHARGE DIMENSIONS.
3. PROVIDE 2-WAY SWITCH FOR HEATING/COOLING MODE SWITCH-OVER OF HP-1. REFER TO MANUFACTURER'S INSTRUCTIONS FOR WIRING OF SWITCH. LABEL SWITCH POSITIONS AS "HEAT" AND "COOL". PROVIDE PERMANENT ENGRAVED SIGN AT SWITCH STATING "TO SET RADIANT FLOOR MODE, TOGGLE SWITCH."
4. 5/8"ø PEX TUBING AT MAX LENGTH OF 300 FT SHALL BE USED THROUGHOUT (TYP.).
5. 6" O.C. TUBING SPACING THROUGHOUT (TYP.).
6. 1/2"HARDWARE CLOTH ON EXHAUST FAN INLET.
7. CONTROLLED BY LINE VOLTAGE THERMOSTAT SET TO 85°F, PROVIDED BY DIV. 23, WIRING BY DIV. 26.
8. CONTRACTOR SHALL DETERMINE FINAL LINE SIZE BASED ON ACTUAL ROUTING IN THE FIELD AND IF NEEDED UPSIZE REFRIGERANT LINE SIZES TO MEET MANUFACTURERS REQUIREMENTS. PIPING CONFIGURATIONS SHALL BE PER MANUFACTURER'S REQUIREMENTS.
9. SIDE BY SIDE EXHAUST DUCTS INTO PLENUM.
10. S.A.D. FOR GRILLE AND LOUVER ASSEMBLY LOCATION.
11. MAKE UP AIR DOOR GRILLE. S.A.D. FOR GRILLE ASSEMBLY LOCATION.
12. LOCATE AT 9 FT AFF. S.A.D.
13. DOOR UNDERCUT FOR MAKE UP AIR. S.A.D. FOR DETAIL.
14. NOT USED.
15. ARCH TO PROVIDE ACCESS PANEL.
16. LOCATE WITHIN CABINET. S.A.D.
17. DUCT FULL SIZE OF LOUVER.
18. CONNECT TO RANGE HOOD. S.A.D. TERMINATE AT WALL LOUVER.
19. LOCATION OF HP-1 CONTROL PANEL.

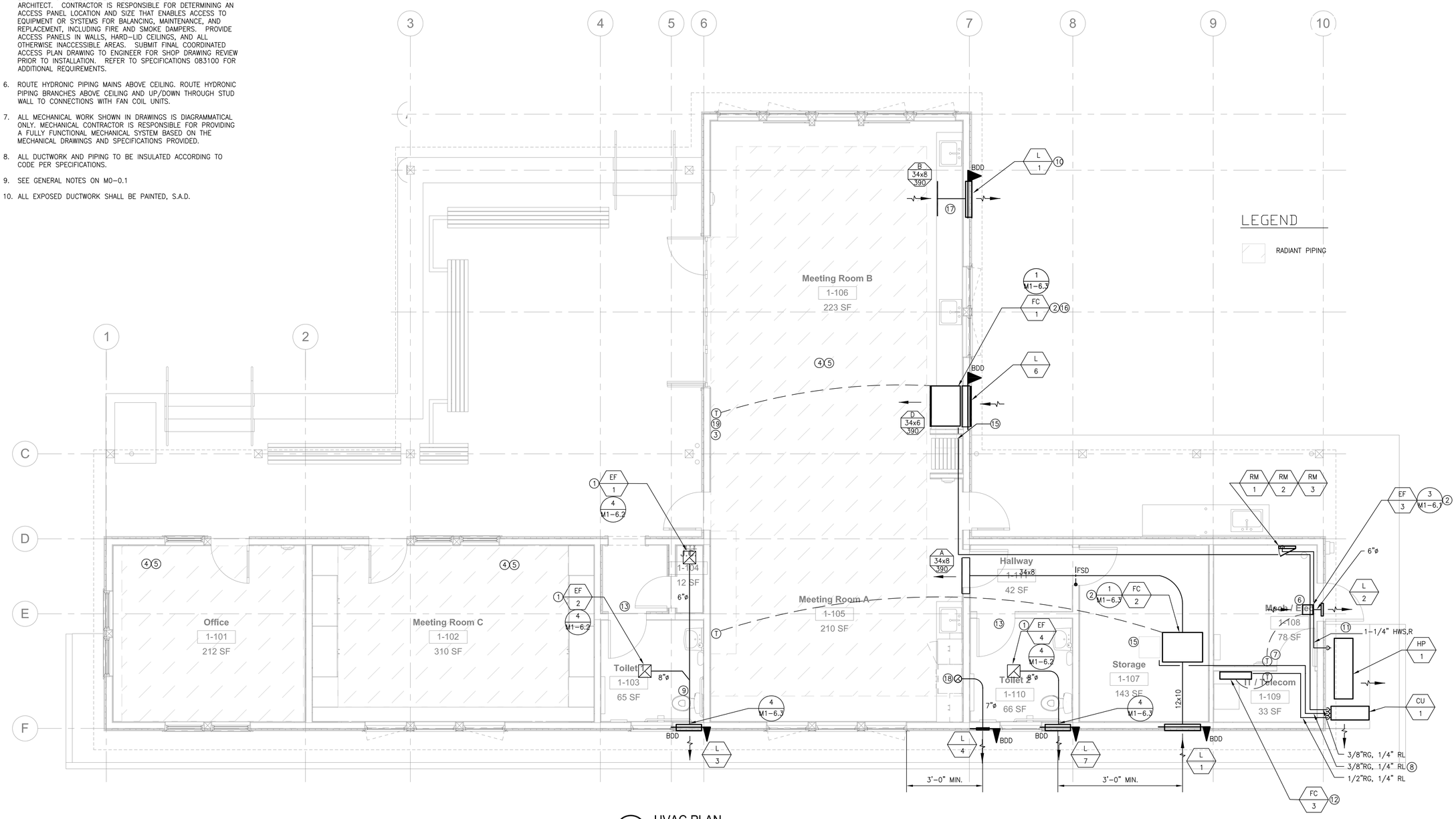

1 HVAC PLAN

SCALE: 1/4"=1'-0"

4 0 4 8

SCALE OF FEET

Project Title:

City of Cupertino - McClellan Ranch Preserve
Environmental Education Center
Re-Bid

Design Firm:

SIEGEL & STRAIN Architects
1295 59th Street
Emeryville, CA 94608
510 / 547-8092
FAX 510 / 547-2604
info@siegelstrain.com

Consultant:

INTEGRAL GROUP
427 13th Street
Oakland, CA 94612
510 663-2070
510 663-2080 fax
www.integralgroup.com

Stamp:

REGISTERED PROFESSIONAL ENGINEER
TYLER BRADSHAW
No. M 33496
Exp. 6-30-14
MECHANICAL
STATE OF CALIFORNIA

No.	Description	Date

Issue Note:

CONSTRUCTION DOCUMENTS
01/10/2014

Project ID:	11-020
File Name:	
Drawn by:	AM
Checked by:	SL
Plot Date:	01/08/2014
Scale:	1/4" = 1'-0"

Sheet Title:

EEC - HVAC FLOOR PLAN

Sheet No.:

M1-2.1

GENERAL NOTES:

1. ALL MECHANICAL WORK SHOWN IN DRAWINGS IS DIAGRAMMATICAL ONLY. MECHANICAL CONTRACTOR IS RESPONSIBLE FOR PROVIDING A FULLY FUNCTIONAL MECHANICAL SYSTEM BASED ON THE MECHANICAL DRAWINGS AND SPECIFICATIONS PROVIDED.
2. SEE GENERAL NOTES ON M0-0.1

SHEET NOTES:

1. REFER TO M0-2.1 FOR IN-SLAB TEMPERATURE SENSOR.
2. 5/8"ø PEX TUBING AT MAX LENGTH OF 300 FT SHALL BE USED THROUGHOUT (TYP.).
3. 6" O.C. TUBING SPACING THROUGHOUT (TYP.).
4. REFER TO M0-2.1 FOR CONTINUATION.
5. DO NOT ROUTE PIPING OVER ELECTRICAL EQUIPMENT. COORDINATE WITH ELECTRICAL.

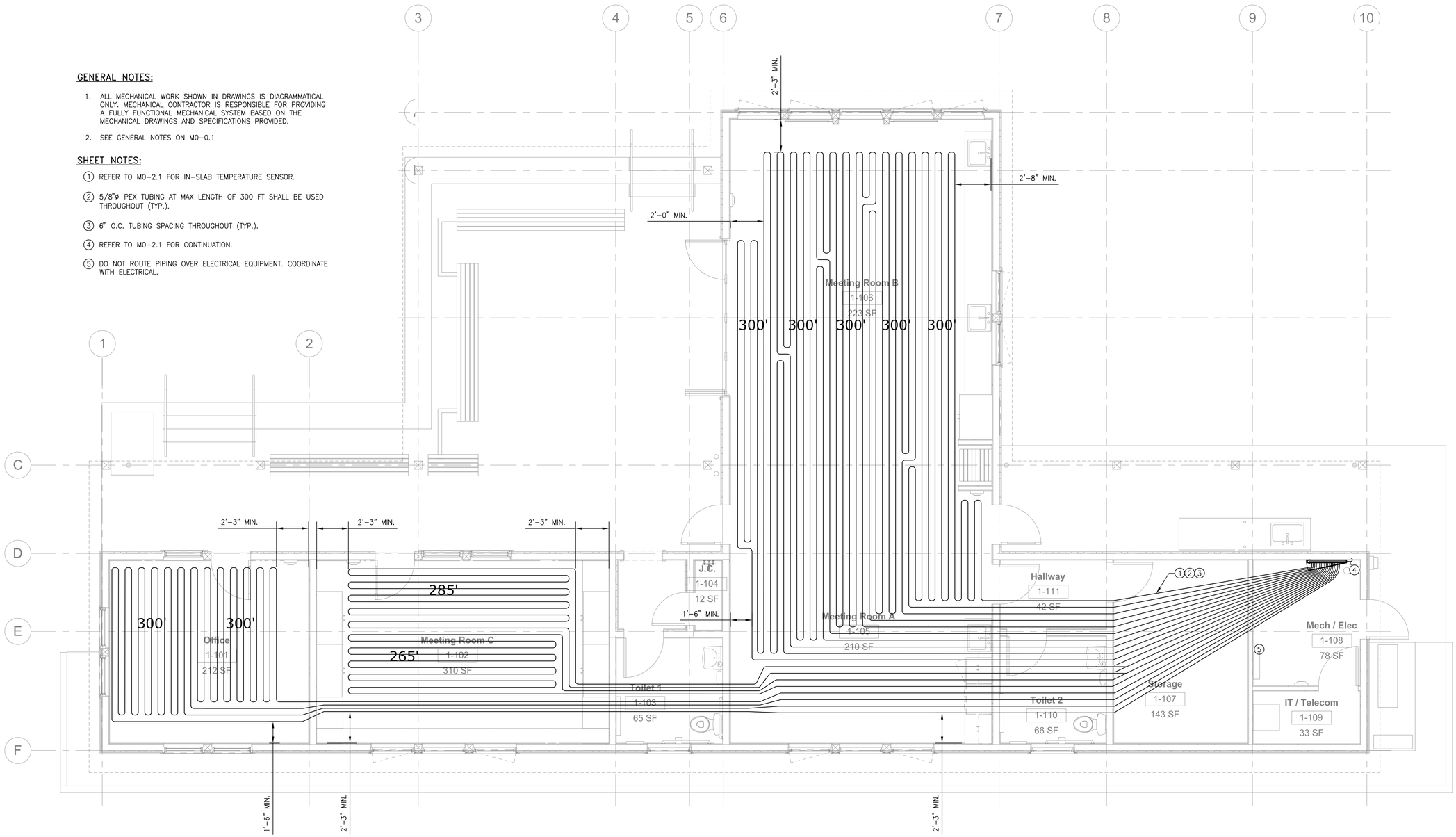

1 RADIANT PIPING PLAN

SCALE: 1/4"=1'-0"

4 0 4 8

SCALE OF FEET

Project Title:

City of Cupertino - McClellan Ranch Preserve
Environmental Education Center
Re-Bid

Design Firm:

SIEGEL & STRAIN Architects
1295 59th Street
Emeryville, CA 94608
510 / 547-8092
FAX 510 / 547-2604
info@siegelstrain.com

Consultant:

INTEGRAL GROUP
427 13th Street
Oakland, CA 94612
510 663-2070
510 663-2080 fax
www.integralgroup.com

Stamp:

REGISTERED PROFESSIONAL ENGINEER
TYLER BRADSHAW
No. M 33496
Exp. 6-30-14
MECHANICAL
STATE OF CALIFORNIA

No.	Description	Date

Issue Note:

CONSTRUCTION DOCUMENTS
01/10/2014

Project ID:	11-020
File Name:	
Drawn by:	AM
Checked by:	SL
Plot Date:	01/08/2014
Scale:	1/4" = 1'-0"

Sheet Title:

EEC - RADIANT PIPING PLAN

Sheet No.:

M1-2.2

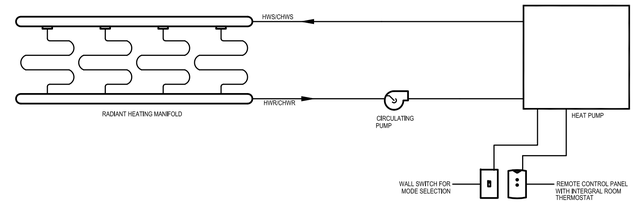

SEQUENCE OF OPERATION: RADIANT SLAB HEATING AND COOLING (TYPICAL; SEE EQUIPMENT SCHEDULES)
ALL SUGGESTED SETPOINTS AND SETTINGS SHALL BE USER ADJUSTABLE.

1. GENERAL
RADIANT SLAB PROVIDES HEATING AND COOLING TO MAINTAIN OCCUPANT THERMAL COMFORT.

2. SCHEDULING
A USER ADJUSTABLE 24 HOUR, 365 DAY SCHEDULE SHALL BE PROVIDED FOR THE RADIANT SLAB. INITIALLY, THE RADIANT SLAB SHALL BE SCHEDULED TO BE ENABLED FROM 8 A.M. UNTIL 10 P.M. DAILY.

3. TEMPERATURE SETPOINT
THE HEAT PUMP (WITH INTEGRATED PUMP AND STORAGE TANK) WILL MODULATE TO MAINTAIN THE WATER SUPPLY TEMPERATURE AS DETERMINED BY THE SEASONAL OPERATION MODE. THE WATER SUPPLY TEMPERATURE SHALL BE MAINTAINED AT 110F DURING 'WINTER' MODE AND 61F DURING 'SUMMER' MODE.

ON A CALL FOR COOLING DURING 'SUMMER' MODE, AS DETERMINED BY THE ROOM THERMOSTAT BUILT INTO THE REMOTE CONTROL PANEL, THE REMOTE CONTOLLER SHALL ENERGIZE THE CIRCULATING PUMP AND THE HEAT PUMP SHALL CYCLE ON TO MAINTAIN 61F SUPPLY TEMPERATURE (ADJUSTABLE). IF THERE IS NO CALL FOR COOLING, THEN THE CIRCULATING PUMP AND HEAT PUMP SHALL BE OFF.

ON A CALL FOR HEATING DURING 'WINTER' MODE, AS DETERMINE BY THE ROOM THERMOSTAT BUILT INTO THE REMOTE CONTROL PANEL, THE REMOTE CONTROLLER SHALL ENERGIZE THE CIRCULATING PUMP AND THE HEAT PUMP SHALL CYCLE ON TO MAINTAIN 110F SUPPLY TEMPERATURE (ADJUSTABLE).

THE MANUAL CHANGEOVER SWITCH SHALL BE WIRED TO THE HEAT PUMP TO CHANGE THE HEAT PUMP FROM 'WINTER' TO 'SUMMER' MODES.

THE HEATING SET POINT SHALL BE 68F AND THE COOLING SET POINT SHALL BE 76F (ADJUSTABLE).

4 RADIANT SLAB CONTROL
SCALE: NONE

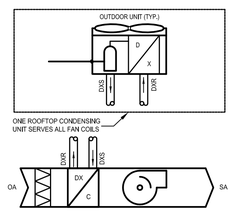

SEQUENCE: DX COOLED ECONOMIZING FAN COIL (TYPICAL, SEE EQUIPMENT SCHEDULES)

ALL SUGGESTED SETPOINTS AND SETTINGS SHALL BE USER ADJUSTABLE VIA THERMOSTAT.

1. SCHEDULING
FAN COIL SHALL BE ENABLED BASED ON A 24 HOUR, 7 DAY SCHEDULE, INITIAL SCHEDULE SHALL BE 24 HOUR OPERATION.

2. FAN OPERATION
WHEN FAN COIL IS ENABLED AND ZONE AIR TEMPERATURE RISES ABOVE THE ZONE AIR TEMPERATURE SETPOINT BY 1°F, FAN AND MECHANICAL COOLING SHALL CYCLE ON UNTIL ROOM IS COOLED TO AN OFFSET OF 2°F BELOW THE ZONE AIR TEMPERATURE SETPOINT, THEN CYCLE OFF. OWNER SHALL HAVE THE ABILITY TO OVERRIDE FAN CYCLING AND SET IT TO CONTINUOUS OPERATION DURING SCHEDULED PERIODS VIA THE THERMOSTAT.

3. FAN SPEED CONTROL
FAN COILS HAVE ELECTRICALLY COMMUTATED (EC) MOTORS, WHICH HAVE INHERENT VARIABLE SPEED CONTROL CAPABILITY WITHOUT NEED FOR A VFD. FAN SPEED DETERMINED INTERNALLY BY THE ON-BOARD CONTROLS TO MAINTAIN TEMPERATURE REQUIRED TO MAINTAIN DESIGN FAN COIL AIR FLOW. THIS SPEED SETTING SHALL BE SET AT THE BAS (REMOTE BALANCING) TO ALLOW REMOTE SPEED ADJUSTMENTS BY THE OPERATOR.

4. DX CONTROL
UNLESS OTHERWISE NOTED ON DRAWINGS, THE DX SPLIT-SYSTEM SHALL MODULATE BY PID CONTROL TO ACHIEVE THE ZONE AIR TEMPERATURE SETPOINT. WHEN THE FAN IS OFF, DX SPLIT SYSTEM IS OFF.

5. TEMPERATURE SETPOINT
THE INITIAL ZONE TEMPERATURE SETPOINTS) SHALL BE 78°F.

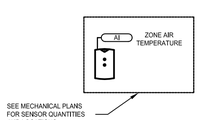

3 DX COOLED FAN COIL CONTROL
SCALE: NONE

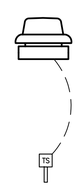

SEQUENCE: EXHAUST FAN - TEMPERATURE CONTROL

1. FAN START/STOP
THE EXHAUST FAN SHALL BE ENABLED WHEN THE ROOM TEMPERATURE EXCEEDS THE MAXIMUM ROOM TEMPERATURE SETPOINT. INITIALLY 85°F.

2. SPEED CONTROL
SET EC MOTOR SPEED AT BALANCE TO ACHIEVE DESIGN AIRFLOW RATE.

2 TEMPERATURE CONTROLLED EF-3 CONTROL
SCALE: NONE

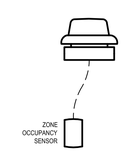

SEQUENCE OF OPERATION: OCCUPANCY CONTROLLED EXHAUST FAN (TYPICAL, SEE EQUIPMENT SCHEDULES)

1. FAN CONTROL
THE EXHAUST FAN SHALL BE LOCALLY CONTROLLED TO OPERATE WHEN THE ZONE(S) SERVED ARE OCCUPIED, ACCORDING TO ANY OCCUPANCY SENSOR WITHIN THE ZONE. THE FAN SHALL STOP 30 MINUTES AFTER ALL ZONES SERVED ARE UNOCCUPIED. (THESE EXHAUST FANS ARE NOT PART OF THE RELIEF AIR PATH FOR ANY AIR HANDLER SERVED ZONE, AND THEREFORE ARE NOT REQUIRED TO OPERATE BASED ON AIR HANDLER ON/OFF STATUS.)

1 OCCUPANCY CONTROLLED EF-1, EF-2 CONTROL
SCALE: NONE

CONTROL LEGEND AND SYMBOLS

SYMBOL	DESCRIPTION
OA	OUTSIDE AIR
SA	SUPPLY AIR
RA	RETURN AIR
EA	EXHAUST AIR
PID	PROPORTIONAL/INTEGRAL/DERIVATIVE
BAS	BUILDING AUTOMATION SYSTEM
AI/AO	ANALOG INPUT / ANALOG OUTPUT
BI/BO	BINARY INPUT / BINARY OUTPUT
	BAS CONTROL POINT
	ZONE SENSOR PANEL WITH DISPLAY AND SETPOINT ADJUST
	ZONE SENSOR PANEL
T	TEMPERATURE SENSOR
T	TEMPERATURE SENSOR IN THERMAL WELL
L H	PRESSURE DIFFERENTIAL SENSOR
	AIR FLOW STATION
	HYDRONIC FLOW METER
	TWO–WAY CONTROL VALVE
	THREE–WAY CONTROL VALVE
	PARALLEL BLADE DAMPER
	OPPOSED BLADE DAMPER
M M	MOTORIZED 2–POSITION ACTUATOR
MM MM	MOTORIZED MODULATING ACTUATOR
T	THERMOSTATIC ACTUATOR
	MANUAL PRESSURE ISOLATION VALVE
WM	WATER METER
	VIBRATION SENSOR
	WATER LEVEL SENSOR
	FAN
	PUMP
M/S	MOTOR STARTER
	VARIABLE FREQUENCY DRIVE
	LOCAL INTERLOCK WITH SENSOR
	ZONE THERMOSTAT
	TWIST TIMER
	FILTERS
H/C C	HEATING/COOLING COIL
	HUMIDIFIER
	RAIN SENSOR
OCC	OCCUPANY SENSOR
SD	SMOKE DETECTOR

Project Title:

City of Cupertino - McClellan Ranch Preserve
Environmental Education Center
Re-Bid

Design Firm:
SIEGEL & STRAIN Architects
1295 59th Street
Emeryville, CA 94608
510 / 547-8092
FAX 510 / 547-2604
info@siegelstrain.com

Consultant:
INTEGRAL GROUP
427 13th Street
Oakland, CA 94612
510 663-2070
510 663-2080 fax
www.integralgroup.com

Stamp:
REGISTERED PROFESSIONAL ENGINEER
TYLER BRADSHAW
No. M 33496
Exp. 6–30–14
MECHANICAL
STATE OF CALIFORNIA

No.	Description	Date

Issue Note:
CONSTRUCTION DOCUMENTS
01/10/2014

Project ID:	11-020
File Name:	
Drawn by:	AM
Checked by:	SL
Plot Date:	01/08/2014
Scale:	NONE

Sheet Title:
HVAC CONTROLS

Sheet No.:
M1-5.1

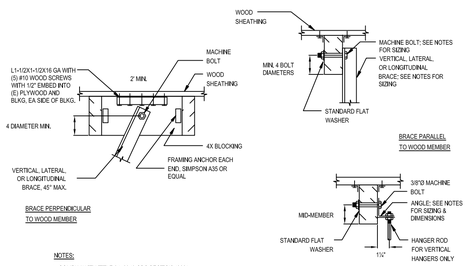

NOTES:

1. COMPLY WITH TITLE 24, 2010 CBC SECTION 1632A
2. FOR PIPES SUPPORTED BY A PIPE HANGER, SEE ANSI/SMACNA-001-2008 TABLE 8-7 FOR MINIMUM PIPE SUPPORT AND BRACE SIZING AND SPACING
3. FOR PIPES SUPPORTED BY A SINGLE TRAPEZE, SEE ANSI/SMACNA 001-2008 TABLE 8-8 FOR BOLT AND BRACE SIZING AND SPACING
4. SEE ANSI/SMACNA 001-2008 TABLE 9-1 FOR ANGLE DIMENSIONS AND THICKNESS
5. HOLES FOR BOLTS SHALL BE BORED $\frac{1}{8}$" LARGER THAN THE NOMINAL BOLT DIAMETER

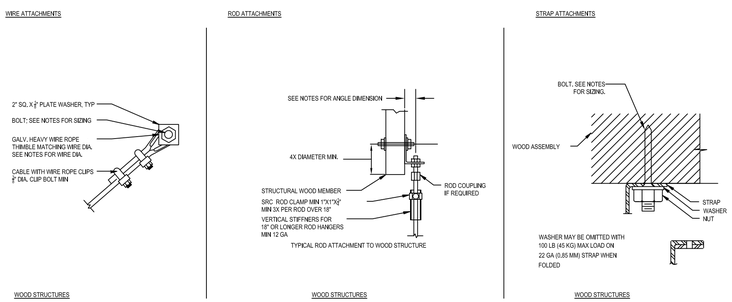

NOTES:

1. COMPLY WITH TITLE 24, 2010 CBC SECTION 1632A
2. SEE ANSI/SMACNA 001-2008 TABLE 9-1 FOR BOLT TYPE AND SIZE AND ANGLE MEMBER DIMENSIONS.
3. MIN PENETRATION IS 6X DIA. LG.N.
4. HOLES FOR BOLTS SHALL BE BORED $\frac{1}{8}$" LARGER THAN THE NOMINAL BOLT DIAMETER
5. SEE ANSI/SMACNA 001-2008 TABLE 8-6; BRACING FOR ROUND DUCTS, FOR BRACING SPACING AND SIZES FOR DUCT SIZES NOT SHOWN.
6. FOR PIPES SUPPORTED BY A SINGLE TRAPEZE, SEE ANSI/SMACNA 001-2008 TABLE 8-8 FOR BOLT AND BRACE SIZING AND SPACING

6 STRUT MOUNTING DETAILS

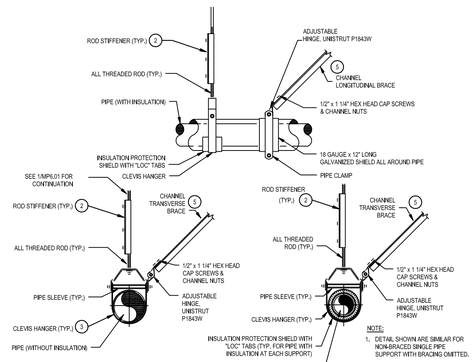

NOTE:

1. DETAIL SHOWN ARE SIMILAR FOR NON-BRACED SINGLE PIPE SUPPORT WITH BRACING OMITTED.
2. COMPLY WITH TITLE 24, 2010 CBC SECTION 1632A.

KEY NOTES:

1. ALL PIPE SUPPORTS SHALL BE PIPING TECHNOLOGY & PRODUCTS, INC. OR EQUAL.
2. INSTALL UNISTRUT P1000 ROD STIFFENER WHEN LENGTH EXCEEDS THE SCHEDULE LENGTH:

MAX. PIPE SIZE, IN.	ROD SIZE, IN.	MAX. ROD LENGTH, IN.
1/2 UP TO 2	3/8	19
3	1/2	25

3. PROVIDE NONMETALLIC SEPARATION BETWEEN UNINSULATED COPPER PIPING AND METAL SUPPORTS. PLASTIC COATED OR FELT LINED CLEVIS HANGER. PLASTIC COATED PIPE CLAMP.
4. REFER TO TYPICAL PIPE SUPPORT AND SEISMIC ATTACHMENTS DETAILS FOR APPLICABLE CONTINUATION. REFER TO 1/MP6.1 AND 4/MP6.1.
5. SEE ANSI/SMACNA 001-2008 TABLE 8-8 FOR BRACE AN BOLT SIZING AND SPACING
6. PROVIDE TRANSVERSE SEISMIC BRACING AT 20'-0" MAX. AND EVERY CHANGE OF DIRECTION.
7. PROVIDE LONGITUDINAL SEISMIC BRACING AT 40'-0" O.C. MAX., MINIMUM OF 2 REQUIRED.
8. BRACE ALL PIPING AND EQUIPMENT TRANSVERSELY AND LONGITUDINALLY ACCORDING TO SMACNA GUIDELINES FOR SEISMIC RESTRAINTS OF MECHANICAL SYSTEM AND PIPING SYSTEM.
9. REFER TO PIPING TECHNOLOGY & PRODUCTS INC. FOR CHANNEL TYPE AND LOAD RATING BASED ON BEAM SPAN FOR UNIFORM AND CONCENTRATED LOADING.
10. REFER TO PIPE HANGER, TRAPEZE AND SEISMIC SUPPORT DETAILS FOR APPLICABLE CONTINUATION.

5 TYPICAL SINGLE PIPE SUPPORT

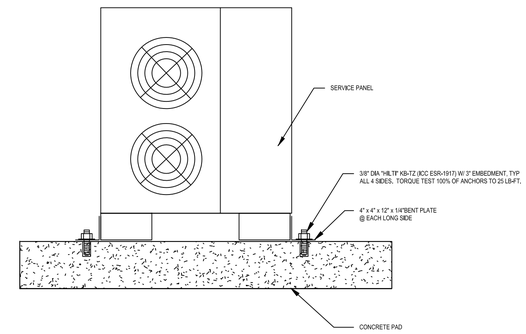

7 HEAT PUMP AND CONDENSING UNIT MOUNTING

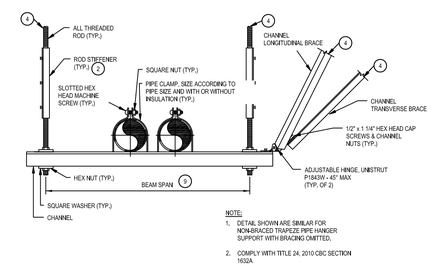

NOTE:

1. DETAIL SHOWN ARE SIMILAR FOR NON-BRACED TRAPEZE PIPE HANGER SUPPORT WITH BRACING OMITTED.
2. COMPLY WITH TITLE 24, 2010 CBC SECTION 1632A.

4 TYPICAL TRAPEZE PIPE HANGER SUPPORT

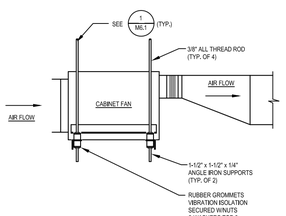

3 EF-3 MOUNTING DETAIL

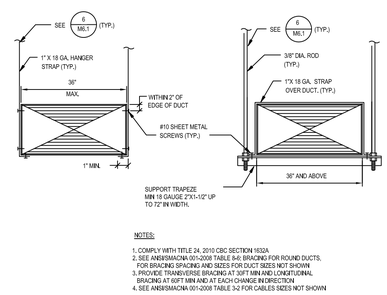

NOTES:

1. COMPLY WITH TITLE 24, 2010 CBC SECTION 1632A
2. SEE ANSI/SMACNA 001-2008 TABLE 8-6; BRACING FOR ROUND DUCTS, FOR BRACING SPACING AND SIZES FOR DUCT SIZES NOT SHOWN
3. PROVIDE TRANSVERSE BRACING AT 30FT MIN AND LONGITUDINAL BRACING AT 60FT MIN AND AT EACH CHANGE IN DIRECTION
4. SEE ANSI/SMACNA 001-2008 TABLE 3-2 FOR CABLES SIZES NOT SHOWN

2 RECTANGULAR AIR DISTRIBUTION SUPPORT

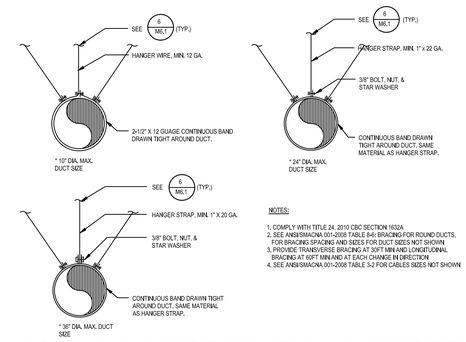

NOTES:

1. COMPLY WITH TITLE 24, 2010 CBC SECTION 1632A
2. SEE ANSI/SMACNA 001-2008 TABLE 8-6; BRACING FOR ROUND DUCTS, FOR BRACING SPACING AND SIZES FOR DUCT SIZES NOT SHOWN
3. PROVIDE TRANSVERSE BRACING AT 30FT MIN AND LONGITUDINAL BRACING AT 60FT MIN AND AT EACH CHANGE IN DIRECTION
4. SEE ANSI/SMACNA 001-2008 TABLE 3-2 FOR CABLES SIZES NOT SHOWN

1 ROUND AIR DISTRIBUTION SUPPORT

Project Title:

City of Cupertino - McClellan Ranch Preserve
Environmental Education Center
Re-Bid

Design Firm:
SIEGEL & STRAIN Architects
1295 59th Street
Emeryville, CA 94608
510 / 547-8092
FAX 510 / 547-2604
info@siegelstrain.com

Consultant:
INTEGRAL GROUP
427 13th Street
Oakland, CA 94612
510 663-2070
510 663-2080 fax
www.integralgroup.com

Stamp:

REGISTERED PROFESSIONAL ENGINEER
TILLER BRADSHAW
No. M 33496
Exp. 6-30-14
MECHANICAL
STATE OF CALIFORNIA

No.	Description	Date

Issue Note:
CONSTRUCTION DOCUMENTS
01/10/2014

Project ID:	11-020
File Name:	
Drawn by:	AM
Checked by:	SL
Plot Date:	01/08/2014
Scale:	NONE

Sheet Title:
HVAC DETAILS

Sheet No.:
M1-6.1

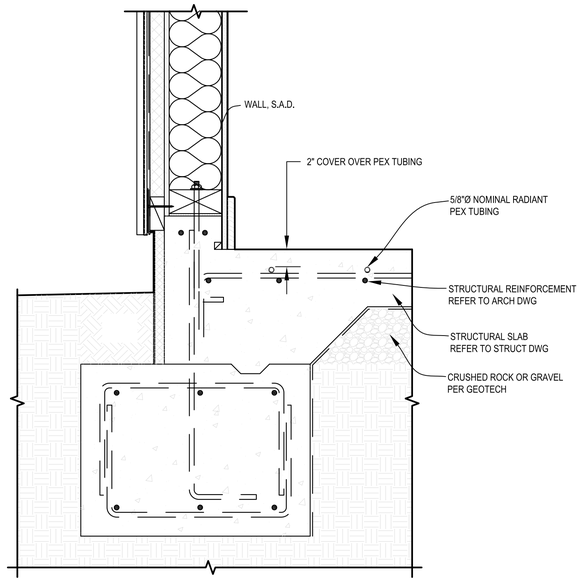

1. REFER TO DWG M2.1 FOR RADIANT TUBE SPACING REQUIREMENTS

6 RADIANT SLAB DETAIL

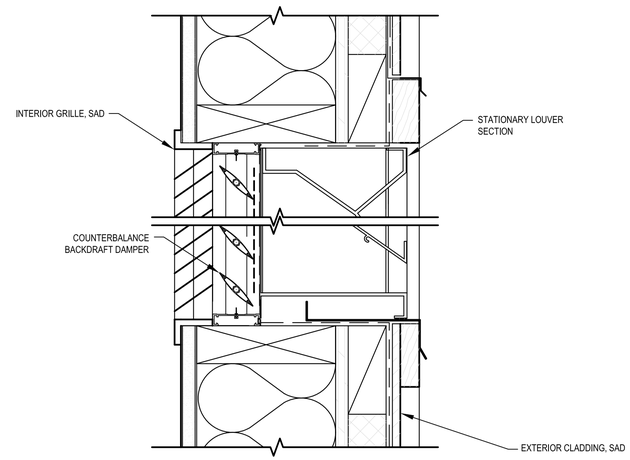

WOOD INSTALLATION

5 EXTERNAL WALL MOUNT LOUVER

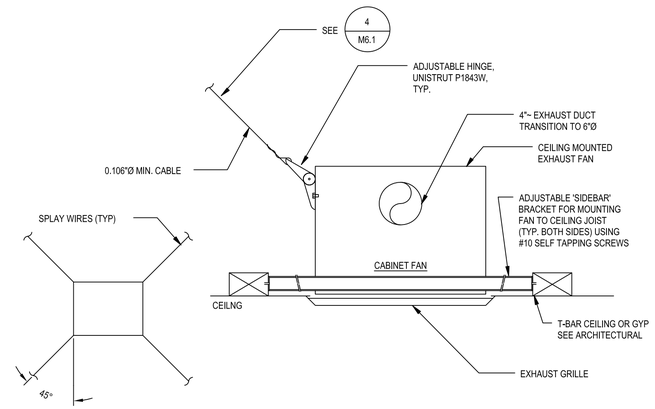

4 EF-1 & EF-2 MOUNTING DETAIL

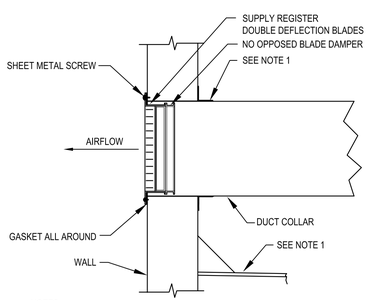

NOTES

1. REFER ARCH DRAWING FOR BLOCKING AND FLASHING DETAILS. BUILT-UP ROOFING AND FLASHING PER ROOFING SPECIFICATIONS.

3 SIDEWALL DIFFUSER DETAIL

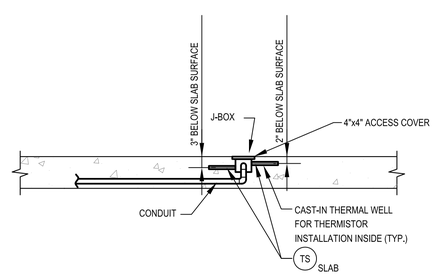

2 RADIANT IN SLAB TEMPERATURE SENSOR DETAIL

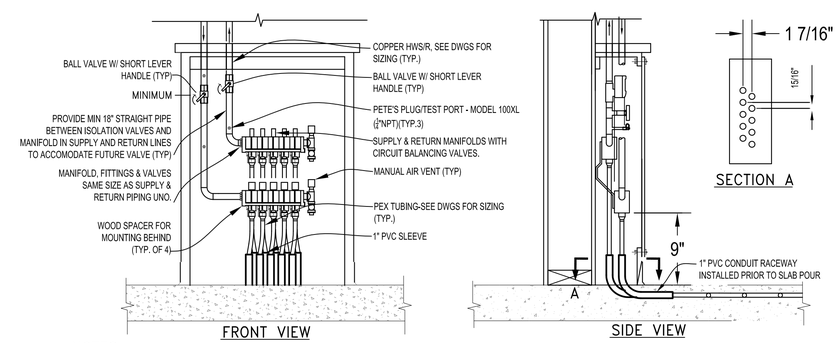

NOTES:

1. SEE DWGS AND SCHEDULE FOR PEX SIZING & LAYOUT.
2. LOCATE ALL VALVES, PETE'S PLUGS, MANIFOLDS WITHIN ENCLOSURE.
3. MAX OVERALL HEIGHT OF OVERLAPPED TUBING OF 1-1/2" AT RADIANT SLAB EXIT. NO OVERLAPS OTHERWISE.
4. INSTALL MANUAL AIR VENTS IN SUPPLY AND RETURN MANIFOLD BRANCH PIPING AS FOLLOWS:
   A) IN PIPING HIGH POINT WHEN PIPING IS ABOVE MAIN
   B) CLOSE TO MANIFOLD WHEN PIPING IS NOT ABOVE MAIN (SIDE CONNECTION)
5. MINIMIZE FITTINGS; USE LONG RADIUS 90 DEG ELBOWS THROUGOUT SYSTEM.
6. PROVIDE MIN 16 GA STEEL PLATE PROTECTORS WHERE PEX TUBING PENETRATES A STUD OR JOIST, AND AT ALL RISER CLAMPS AND SUPPORTS.
7. PROVIDE SLEEVES WHERE ABRASION MAY OCCUR.
8. PROVIDE GROMMETS OR SLEEVES AT PENETRATIONS THROUGH METAL STUDS.
9. FOR RISER APPLICATIONS WITH PEX TUBING IN WALLS:
   A) PROVIDE A MID-STORY PIPING SUPPORT AND NAIL BASE.
   B) PROVIDE EPOXY-COATED RISER CLAMPS AT THE BASE OF THE CEILING AT EACH FLOOR.

1 RADIANT MANIFOLD DETAIL

Project Title:

City of Cupertino - McClellan Ranch Preserve
Environmental Education Center
Re-Bid

Design Firm:
SIEGEL & STRAIN Architects
1295 59th Street
Emeryville, CA 94608
510 / 547-8092
FAX 510 / 547-2604
info@siegelstrain.com

Consultant:
INTEGRAL GROUP
427 13th Street
Oakland, CA 94612
510 663-2070
510 663-2080 fax
www.integralgroup.com

Stamp:

REGISTERED PROFESSIONAL ENGINEER
TYLER BRADSHAW
No. M 33496
Exp. 6-30-14
MECHANICAL
STATE OF CALIFORNIA

No.	Description	Date

Issue Note:
CONSTRUCTION DOCUMENTS
01/10/2014

Project ID:	11-020
File Name:	
Drawn by:	AM
Checked by:	SL
Plot Date:	01/08/2014
Scale:	NONE

Sheet Title:
HVAC DETAILS

Sheet No.:
M1-6.2

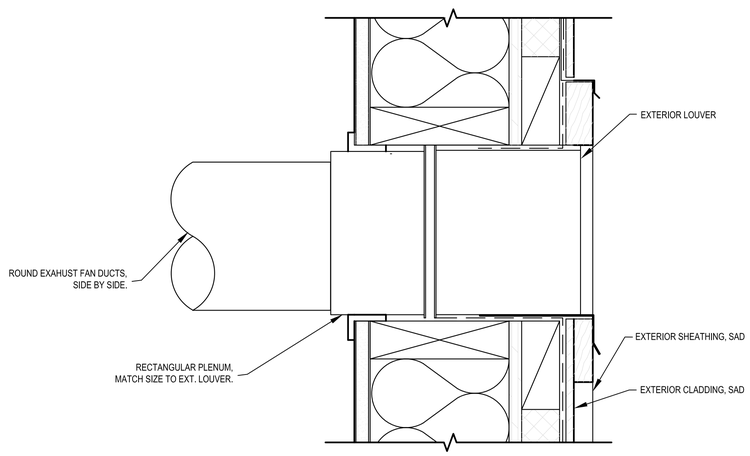

WOOD INSTALLATION

4 STACKED DUCT LOUVER CONNECTION DETAIL

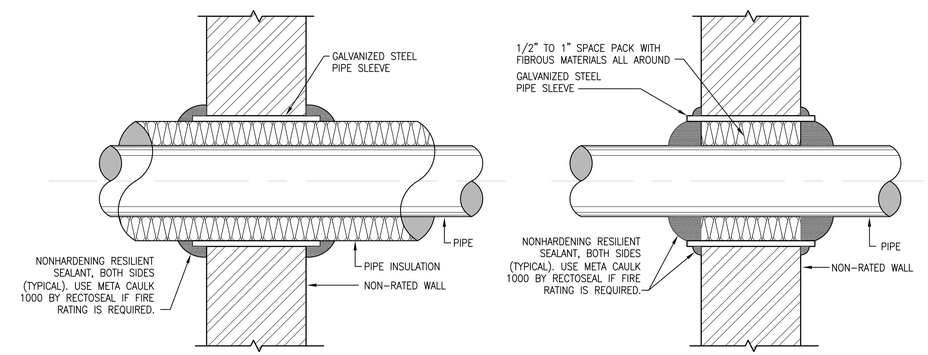

NOTE:

1. INSTALL FIRE STOPPING MATERIAL PER MANUFACTURER'S DETAIL.

3 TYPICAL PIPE PENETRATION THROUGH WALL DETAIL

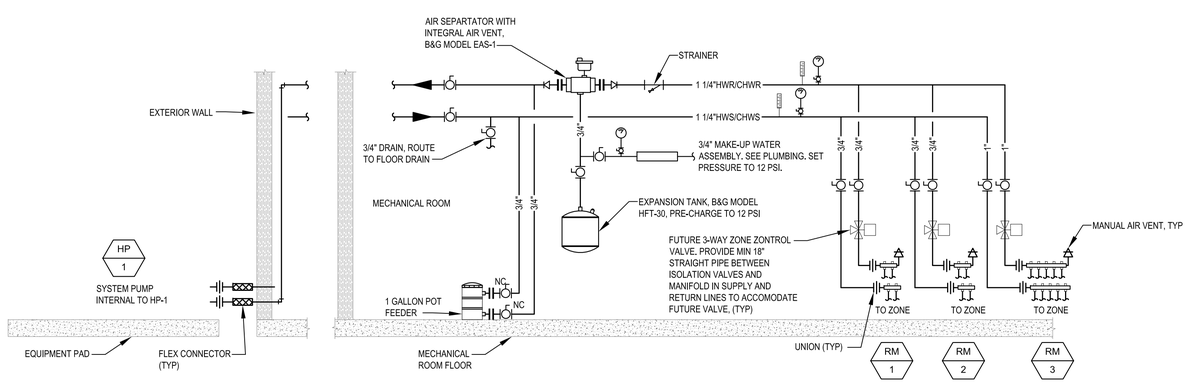

2 CHILLED/HEATING WATER PIPING SCHEMATIC

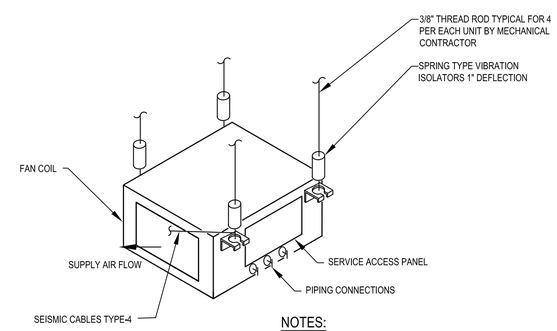

NOTES:

1. MECHANICAL CONTRACTOR TO INSTALL UNIT AS PER MANUFACTURER INSTALLATION MANUAL.
2. MAINTAIN 24" CLEARANCE BETWEEN SERVICE ACCESS PANEL AND LIGHTS, PIPING, STRUCTURAL MEMBERS, ETC.
3. DISCONNECT SWITCHES & POWER WIRING BY ELECTRICAL CONTRACTOR.

1 FAN COIL UNIT (CEILING MOUNTED) DETAIL

Project Title:

City of Cupertino - McClellan Ranch Preserve
Environmental Education Center
Re-Bid

Design Firm:

SIEGEL & STRAIN Architects
1295 59th Street
Emeryville, CA 94608
510 / 547-8092
FAX 510 / 547-2604
info@siegelstrain.com

Consultant:

INTEGRAL GROUP
427 13th Street
Oakland, CA 94612
510 663-2070
510 663-2080 fax
www.integralgroup.com

Stamp:

REGISTERED PROFESSIONAL ENGINEER
TYLER BRADSHAW
No. M 33496
Exp. 6-30-14
MECHANICAL
STATE OF CALIFORNIA

No.	Description	Date

Issue Note:

CONSTRUCTION DOCUMENTS
01/10/2014

Project ID:	11-020
File Name:	
Drawn by:	AM
Checked by:	SL
Plot Date:	01/08/2014
Scale:	NONE

Sheet Title:

HVAC DETAILS

Sheet No.:

M1-6.3

PERFORMANCE CERTIFICATE OF COMPLIANCE (Part 1 of 3) PERF-1C

Project Name			Date
McClellan Ranch Preserve Environmental Education Center			7/1/2013
Project Address	Climate Zone	Total Cond. Floor Area	Addition Floor Area
City of Cupertino	CA Climate Zone 04	1,645	n/a

GENERAL INFORMATION

Building Type: ☒ Nonresidential ☐ High-Rise Residential ☐ Hotel/Motel Guest Room
☐ Relocatable - indicate specific climate zone ☐ all climates

Phase of Construction: ☒ New Construction ☐ Addition ☐ Alteration

STATEMENT OF COMPLIANCE

This certificate of compliance lists the building features and specifications needed to comply with Title 24, Parts 1 and 8 of the California Code of Regulations. This certificate applies only to a Building using the performance compliance approach.

The documentation author hereby certifies that the documentation is accurate and complete.

Documentation Author

Name		Signature	
Company	Integral Group Inc.	Date	7/1/2013
Address		Phone	
City/State/Zip			

The Principal Designer hereby certifies that the proposed building design represented in this set of construction documents is consistent with the other compliance forms and worksheets, with the specifications, and with any other calculations submitted with this permit application. The proposed building has been designed to meet the energy efficiency requirements contained in sections 110, 116 through 118, and 140 through 149 of Title 24, Part 6. Please check one:

ENV.	LTG.	MECH.	
☐	☐	☐	I hereby affirm that I am eligible under the provisions of Division 3 of the Business and Professions Code to sign this document as the person responsible for its preparation; and that I am licensed in the State of California as a civil engineer, mechanical engineer, electrical engineer, or I am a licensed architect.
☐	☐	☐	I affirm that I am eligible under the provisions of Division 3 of the Business and Professions Code by section 5537.2 or 6737.3 to sign this document as the person responsible for its preparation; and that I am a licensed contractor performing this work.
☐	☐	☐	I affirm that I am eligible under Division 3 of the Business and Professions Code to sign this document because it pertains to a structure or type of work described as exempt pursuant to Business and Professions Code Sections 5537, 5538 and 6737.1.

Principal Envelope Designer

Name		Signature	
Company		Date	
Address		License #	
City/State/Zip		Phone	

Principal Mechanical Designer

Name	Tyler Bradshaw	Signature	
Company	Integral Group	Date	
Address	427 13th St	License #	
City/State/Zip	Oakland, CA 94612	Phone	

Principal Lighting Designer

Name		Signature	
Company		Date	
Address		License #	
City/State/Zip		Phone	

INSTRUCTIONS TO APPLICANT COMPLIANCE & WORKSHEETS (check box if worksheets are included)

☒	ENV-1C	Certificate of Compliance. Required on plans.	☒	MECH-1C	Certificate of Compliance. Required on plans.
☒	LTG-1C	Certificate of Compliance. Required on plans.	☒	MECH-2C	Air/Water Side/Service Hot Water & Pool Requirements.
☐	LTG-2C	Lighting Controls Credit Worksheet.	☒	MECH-3C	Mechanical Ventilation and Reheat.
☒	LTG-3C	Indoor Lighting Power Allowance.	☒	MECH-5C	Mechanical Equipment Details.

PERFORMANCE CERTIFICATE OF COMPLIANCE (Part 2 of 3) PERF-1C

Project Name	Date
McClellan Ranch Preserve Environmental Education Center	7/1/2013

ANNUAL TDV ENERGY USE SUMMARY (kBtu/sqft-yr)

Energy Component	Standard Design	Proposed Design	Compliance Margin
Space Heating	149.12	38.68	110.47
Space Cooling	169.28	166.71	2.57
Indoor Fans	128.71	149.58	-23.87
Heat Rejection	0.00	0.00	0.00
Pumps & Misc.	0.00	0.00	0.00
Domestic Hot Water	35.76	35.76	0.00
Lighting	88.20	89.84	8.36
Receptacle	54.06	54.06	0.00
Process	0.00	0.00	0.00
Process Lighting	0.00	0.00	0.00
TOTALS	602.12	804.60	97.52
Percent better than Standard	16.2 %	(16.2 % excluding process)	

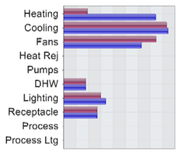

BUILDING COMPLIES

GENERAL INFORMATION

Building Orientation	(N) 345 deg	Conditioned Floor Area	1,645	sqft.
Number of Stories	1	Unconditioned Floor Area	152	sqft.
Number of Systems	3	Conditioned Footprint Area	1,645	sqft.
Number of Zones	8	Natural Gas Available On Site	Yes	

	Orientation	Gross Area		Glazing Area		Glazing Ratio
Front Elevation	(N)	889	sqft.	264	sqft.	29.7 %
Left Elevation	(E)	633	sqft.	77	sqft.	12.1 %
Rear Elevation	(S)	1,039	sqft.	149	sqft.	14.4 %
Right Elevation	(W)	633	sqft.	72	sqft.	11.3 %
Total		3,194	sqft.	562	sqft.	17.6 %
Roof		1,955	sqft.	0	sqft.	0.0 %

	Standard		Proposed		
Prescriptive Lighting Power Density	1.098	W/sqft.	0.961	W/sqft.	Prescriptive Values for Comparison only. See LTG-1C for allowed LPD.
Prescriptive Envelope TDV Energy	109.772		76.104		

Remarks:

PERFORMANCE CERTIFICATE OF COMPLIANCE (Part 3 of 3) PERF-1C

Project Name	Date
McClellan Ranch Preserve Environmental Education Center	7/1/2013

ZONE INFORMATION

System Name	Zone Name	Occupancy Type	Floor Area (sqft.)	Inst. LPD (W/sf)[1]	Ctrl. Credits (W/sf)[2]	Allowed LPD Area (W/sf)[3]	Allowed LPD Tailored (W/sf)[4]	Proc. Loads (W/sf)
Outdoor HP	101 Office	Comp Bldg Office	201	*1.000				
	102 Classroom C	Classroom, Lecture, Training	310	*1.000				
	103 Toilet	Corridor/Restroom/Support	66	*0.800				
	104 JC	Corridor/Restroom/Support	11	*0.800				
	108 Mech/Elec	Electrical, Mechanical Room	80	*0.700				
	107 Storage	Corridor/Restroom/Support	162	*0.800				
IT Fan Coil	109 IT/Telecom	Electrical, Mechanical Room	34	*0.700				
Classroom PC	Classroom A/ Classroom B	Classroom, Lecture, Training	944	*1.000				

Notes: 1. See LTG-1C (Items marked with asterisk, see LTG-1-C by others) 2. See LTG-2C 3. See LTG-3C (by others) 4. See LTG-4C Items above require special documentation

EXCEPTIONAL CONDITIONS COMPLIANCE CHECKLIST

The local enforcement agency should pay special attention to the items specified in this checklist. These items require special written justification and documentation, and special verification to be used with the performance approach. The local enforcement agency determines the adequacy of the justifications, and may reject a building or design that otherwise complies based on the adequacy of the special justification and documentation submitted.

The exceptional features listed in this performance approach application have specifically been reviewed. Adequate written justification and documentation for their use have been provided by the applicant.

Authorized Signature or Stamp _____

CERTIFICATE OF COMPLIANCE AND FIELD INSPECTION ENERGY CHECKLIST (Part 1 of 3) ENV-1C

Project Name			Date
McClellan Ranch Preserve Environmental Education Center			7/1/2013
Project Address	Climate Zone	Total Cond. Floor Area	Addition Floor Area
City of Cupertino	4	1,645	n/a

GENERAL INFORMATION

Building Type: ☒ Nonresidential ☐ High-Rise Residential ☐ Hotel/Motel Guest Room
☐ Schools (Public School) ☐ Relocatable Public School Bldg. ☒ Conditioned Spaces ☐ Unconditioned Spaces
☐ Skylight Area for Large Enclosed Space ≥ 8000 ft² (If checked include the ENV-4C with submittal)

Phase of Construction: ☒ New Construction ☐ Addition ☐ Alteration
Approach of Compliance: ☐ Component ☒ Overall Envelope ☐ Unconditioned (file affidavit)
Front Orientation: N, E, S, W or in Degrees: 345 deg

FIELD INSPECTION ENERGY CHECKLIST

OPAQUE SURFACE DETAILS / **INSULATION**

Tag/ID	Assembly Type	Area (ft²)	Orientation N, E, S, W	U-Factor	Cavity R-Value	Exterior R-Value	Exterior Framing[1]	Interior R-Value	Interior Framing[1]	Joint Appendix 4	Condition Status	Pass	Fail[2]
1	Wall	135	(W)	0.042	R-13					4.3.1-H3	New	☐	☐
2	Wall	135	(N)	0.042	R-13					4.3.1-H3	New	☐	☐
3	Wall	162	(S)	0.042	R-13					4.3.1-H3	New	☐	☐
4	Roof	230	(N)	0.031	R-30					4.2.1-A20	New	☐	☐
5	Slab	201	(N)	1.350	None					4.4.8-A11	New	☐	☐
6	Wall	67	(E)	0.042	R-13					4.3.1-H3	New	☐	☐
7	Wall	198	(N)	0.042	R-13					4.3.1-H3	New	☐	☐
8	Roof	363	(N)	0.031	R-30					4.2.1-A20	New	☐	☐
9	Wall	272	(S)	0.042	R-13					4.3.1-H3	New	☐	☐
10	Slab	310	(N)	0.434	R-20					4.4.7-F9	New	☐	☐

1. See Instructions in the Nonresidential Compliance Manual, page 3-98.
2. If Fail, then describe on Page 2 of the Inspection Checklist Form and take appropriate action to correct. A fail does not meet compliance.

FENESTRATION SURFACE DETAILS

Tag/ID	Fenestration Type	Area (ft²)	Orientation N, E, S, W	Max U-Factor	U-Factor Source	Max (RSHGC)	SHGC Source	Overhang	Conditions Status	Pass	Fail[2]
1	Window	72	(W)	0.280	NFRC	0.380	NFRC	☐	New	☐	☐
2	Window	264	(N)	0.280	NFRC	0.380	NFRC	☐	New	☐	☐
3	Window	149	(S)	0.280	NFRC	0.380	NFRC	☐	New	☐	☐
4	Window	77	(E)	0.280	NFRC	0.380	NFRC	☐	New	☐	☐
								☐		☐	☐
								☐		☐	☐
								☐		☐	☐
								☐		☐	☐
								☐		☐	☐
								☐		☐	☐

1. See Instructions in the Nonresidential Compliance Manual, page 3-98.
2. If Fail then describe on Page 2 of the Inspection Checklist Form and take appropriate action to correct. Verify building plans if necessary.

CERTIFICATE OF COMPLIANCE AND FIELD INSPECTION ENERGY CHECKLIST (Part 1 of 3) ENV-1C

Project Name			Date
McClellan Ranch Preserve Environmental Education Center			7/1/2013
Project Address	Climate Zone	Total Cond. Floor Area	Addition Floor Area
City of Cupertino	4	1,645	n/a

GENERAL INFORMATION

Building Type: ☒ Nonresidential ☐ High-Rise Residential ☐ Hotel/Motel Guest Room
☐ Schools (Public School) ☐ Relocatable Public School Bldg. ☒ Conditioned Spaces ☐ Unconditioned Spaces
☐ Skylight Area for Large Enclosed Space ≥ 8000 ft² (If checked include the ENV-4C with submittal)

Phase of Construction: ☒ New Construction ☐ Addition ☐ Alteration
Approach of Compliance: ☐ Component ☒ Overall Envelope ☐ Unconditioned (file affidavit)
Front Orientation: N, E, S, W or in Degrees: 345 deg

FIELD INSPECTION ENERGY CHECKLIST

OPAQUE SURFACE DETAILS / **INSULATION**

Tag/ID	Assembly Type	Area (ft²)	Orientation N, E, S, W	U-Factor	Cavity R-Value	Exterior R-Value	Exterior Framing[1]	Interior R-Value	Interior Framing[1]	Joint Appendix 4	Condition Status	Pass	Fail[2]
11	Wall	123	(S)	0.042	R-13					4.3.1-H3	New	☐	☐
12	Roof	83	(N)	0.031	R-30					4.2.1-A20	New	☐	☐
13	Wall	71	(N)	0.042	R-13					4.3.1-H3	New	☐	☐
14	Slab	65	(N)	0.434	R-20					4.4.7-F9	New	☐	☐
15	Wall	31	(N)	0.042	R-13					4.3.1-H3	New	☐	☐
16	Roof	18	(N)	0.031	R-30					4.2.1-A20	New	☐	☐
17	Wall	87	(W)	0.042	R-13					4.3.1-H3	New	☐	☐
18	Slab	11	(N)	0.434	R-20					4.4.7-F9	New	☐	☐
19	Wall	103	(E)	0.042	R-13					4.3.1-H3	New	☐	☐
20	Roof	181	(N)	0.031	R-30					4.2.1-A20	New	☐	☐

1. See Instructions in the Nonresidential Compliance Manual, page 3-98.
2. If Fail, then describe on Page 2 of the Inspection Checklist Form and take appropriate action to correct. A fail does not meet compliance.

FENESTRATION SURFACE DETAILS

Tag/ID	Fenestration Type	Area (ft²)	Orientation N, E, S, W	Max U-Factor	U-Factor Source	Max (RSHGC)	SHGC Source	Overhang	Conditions Status	Pass	Fail[2]
								☐		☐	☐
								☐		☐	☐
								☐		☐	☐
								☐		☐	☐
								☐		☐	☐
								☐		☐	☐
								☐		☐	☐
								☐		☐	☐
								☐		☐	☐
								☐		☐	☐

1. See Instructions in the Nonresidential Compliance Manual, page 3-98.
2. If Fail then describe on Page 2 of the Inspection Checklist Form and take appropriate action to correct. Verify building plans if necessary.

CERTIFICATE OF COMPLIANCE AND FIELD INSPECTION ENERGY CHECKLIST (Part 1 of 3) ENV-1C

Project Name			Date
McClellan Ranch Preserve Environmental Education Center			7/1/2013
Project Address	Climate Zone	Total Cond. Floor Area	Addition Floor Area
City of Cupertino	4	1,645	n/a

GENERAL INFORMATION

Building Type: ☒ Nonresidential ☐ High-Rise Residential ☐ Hotel/Motel Guest Room
☐ Schools (Public School) ☐ Relocatable Public School Bldg. ☒ Conditioned Spaces ☐ Unconditioned Spaces
☐ Skylight Area for Large Enclosed Space ≥ 8000 ft² (If checked include the ENV-4C with submittal)

Phase of Construction: ☒ New Construction ☐ Addition ☐ Alteration
Approach of Compliance: ☐ Component ☒ Overall Envelope ☐ Unconditioned (file affidavit)
Front Orientation: N, E, S, W or in Degrees: 345 deg

FIELD INSPECTION ENERGY CHECKLIST

OPAQUE SURFACE DETAILS / **INSULATION**

Tag/ID	Assembly Type	Area (ft²)	Orientation N, E, S, W	U-Factor	Cavity R-Value	Exterior R-Value	Exterior Framing[1]	Interior R-Value	Interior Framing[1]	Joint Appendix 4	Condition Status	Pass	Fail[2]
21	Wall	84	(N)	0.042	R-13					4.3.1-H3	New	☐	☐
22	Slab	80	(N)	0.434	R-20					4.4.7-F9	New	☐	☐
23	Roof	49	(N)	0.031	R-30					4.2.1-A20	New	☐	☐
24	Wall	78	(E)	0.042	R-13					4.3.1-H3	New	☐	☐
25	Wall	109	(S)	0.042	R-13					4.3.1-H3	New	☐	☐
26	Slab	34	(N)	0.434	R-20					4.4.7-F9	New	☐	☐
27	Roof	579	(S)	0.031	R-30					4.2.1-A20	New	☐	☐
28	Wall	309	(E)	0.042	R-13					4.3.1-H3	New	☐	☐
29	Roof	472	(N)	0.031	R-30					4.2.1-A20	New	☐	☐
30	Wall	223	(S)	0.042	R-13					4.3.1-H3	New	☐	☐

1. See Instructions in the Nonresidential Compliance Manual, page 3-98.
2. If Fail, then describe on Page 2 of the Inspection Checklist Form and take appropriate action to correct. A fail does not meet compliance.

FENESTRATION SURFACE DETAILS

Tag/ID	Fenestration Type	Area (ft²)	Orientation N, E, S, W	Max U-Factor	U-Factor Source	Max (RSHGC)	SHGC Source	Overhang	Conditions Status	Pass	Fail[2]
								☐		☐	☐
								☐		☐	☐
								☐		☐	☐
								☐		☐	☐
								☐		☐	☐
								☐		☐	☐
								☐		☐	☐
								☐		☐	☐
								☐		☐	☐
								☐		☐	☐

1. See Instructions in the Nonresidential Compliance Manual, page 3-98.
2. If Fail then describe on Page 2 of the Inspection Checklist Form and take appropriate action to correct. Verify building plans if necessary.

CERTIFICATE OF COMPLIANCE AND FIELD INSPECTION ENERGY CHECKLIST (Part 1 of 3) ENV-1C

Project Name			Date
McClellan Ranch Preserve Environmental Education Center			7/1/2013
Project Address	Climate Zone	Total Cond. Floor Area	Addition Floor Area
City of Cupertino	4	1,645	n/a

GENERAL INFORMATION

Building Type: ☒ Nonresidential ☐ High-Rise Residential ☐ Hotel/Motel Guest Room
☐ Schools (Public School) ☐ Relocatable Public School Bldg. ☒ Conditioned Spaces ☐ Unconditioned Spaces
☐ Skylight Area for Large Enclosed Space ≥ 8000 ft² (If checked include the ENV-4C with submittal)

Phase of Construction: ☒ New Construction ☐ Addition ☐ Alteration
Approach of Compliance: ☐ Component ☒ Overall Envelope ☐ Unconditioned (file affidavit)
Front Orientation: N, E, S, W or in Degrees: 345 deg

FIELD INSPECTION ENERGY CHECKLIST

OPAQUE SURFACE DETAILS / **INSULATION**

Tag/ID	Assembly Type	Area (ft²)	Orientation N, E, S, W	U-Factor	Cavity R-Value	Exterior R-Value	Exterior Framing[1]	Interior R-Value	Interior Framing[1]	Joint Appendix 4	Condition Status	Pass	Fail[2]
31	Wall	108	(N)	0.042	R-13					4.3.1-H3	New	☐	☐
32	Wall	358	(W)	0.042	R-13					4.3.1-H3	New	☐	☐
33	Slab	944	(N)	0.434	R-20					4.4.7-F9	New	☐	☐
												☐	☐
												☐	☐
												☐	☐
												☐	☐
												☐	☐
												☐	☐

1. See Instructions in the Nonresidential Compliance Manual, page 3-98.
2. If Fail, then describe on Page 2 of the Inspection Checklist Form and take appropriate action to correct. A fail does not meet compliance.

FENESTRATION SURFACE DETAILS

Tag/ID	Fenestration Type	Area (ft²)	Orientation N, E, S, W	Max U-Factor	U-Factor Source	Max (RSHGC)	SHGC Source	Overhang	Conditions Status	Pass	Fail[2]
								☐		☐	☐
								☐		☐	☐
								☐		☐	☐
								☐		☐	☐
								☐		☐	☐
								☐		☐	☐
								☐		☐	☐
								☐		☐	☐
								☐		☐	☐
								☐		☐	☐

1. See Instructions in the Nonresidential Compliance Manual, page 3-98.
2. If Fail then describe on Page 2 of the Inspection Checklist Form and take appropriate action to correct. Verify building plans if necessary.

CERTIFICATE OF COMPLIANCE AND FIELD INSPECTION ENERGY CHECKLIST (Part 2 of 3) ENV-1C

Project Name	Date
McClellan Ranch Preserve Environmental Education Center	7/1/2013

ROOFING PRODUCT (COOL ROOFS)

(Note if the roofing product is not CRRC certified, this compliance approach cannot be used). Go to Overall Envelope Approach or Performance Approach.

CHECK APPLICABLE BOX BELOW IF EXEMPT FROM THE ROOFING PRODUCT "COOL ROOF" REQUIREMENTS:	Pass	Fail[1]	N/A
☐ Roofing compliance not required in Climate Zones 1 and16 with a Low-Sloped. 2:12 pitch or less.	☐	☐	☐
☐ Roofing compliance not required in Climate Zone 1 with a Steep-Sloped with less than 5 lb/ft². Greater than 2:12 pitch.	☐	☐	☐
☐ Low-sloped Wood framed roofs in Climate Zones 3 and 5 are exempted, solar reflectance and thermal emittance or SRI that have a U-factor of 0.039 or lower. See Opaque Surface Details roof assembly, Column H of ENV-4C.	☐	☐	☐
☐ Low-sloped Metal building roofs in Climate Zone 3 and 5 are exempted, solar reflectance and thermal emittance or SRI that have a U-factor of 0.048 or lower. See Opaque Surface Details roof assembly below, Column H of ENV-4C.	☐	☐	☐
☐ The roof area covered by building integrated photovoltaic panels and building integrated solar thermal panels are exempted. Solar reflectance and thermal emittance or SRI, see spreadsheet calculator at www.energy.ca.gov/title24/	☐	☐	☐
☐ Roof constructions that have thermal mass over the roof membrane with a weight of at least 25 lb/ft² are exempt from the Cool Roof criteria below.	☐	☐	☐
☐ High-rise residential buildings and hotels and motels with low-sloped roofs in Climate Zones 1 through 9, 12 and 16 are exempted from the low-sloped roofing criteria.	☐	☐	☐

1. If Fail then describe on this page of the Inspection Checklist Form and take appropriate action to correct. Verify building plans if necessary.

CRRC Product ID Number[1]	Roof Slope ≤ 2:12	Roof Slope > 2:12	Product Weight < 25lb/ft²	Product Weight ≥ 25lb/ft²	Product Type[2]	Aged Solar Reflectance[3]	Thermal Emmitance	SRI[5]	Pass	Fail[6]
	☐	☐	☐	☐		☐ [4]			☐	☐
	☐	☐	☐	☐		☐ [4]			☐	☐
	☐	☐	☐	☐		☐ [4]			☐	☐
	☐	☐	☐	☐		☐ [4]			☐	☐
	☐	☐	☐	☐		☐ [4]			☐	☐

1. The CRRC Product ID Number can be obtained from the Cool Roof Rating Council's Rated Product Directory at www.coolroofs.org/products/search.php
2. Indicate the type of product is being used for the roof top, i.e. single-ply roof, asphalt roof, metal roof, etc.
3. If the Aged Reflectance is not available in the Cool Roof Rating Council's Rated Product Directory then use the initial Reflectance value from the same directory and use the equation $(0.8+0.7(\rho_{initial} - 0.2))$ to obtain a calculated aged value. Where ρ is the Initial Solar Reflectance from the Cool Roof Rating Council's Rated Product Directory.
4. Check box if the Aged Reflectance is a calculated value using the equation above.
5. The SRI value needs to be calculated from a spreadsheet calculator at http://www.energy.ca.gov/title24/
6. If Fail then describe on this page of the Inspection Checklist Form and take appropriate action to correct. Verify building plans if necessary.

To apply **Liquid Field Applied Coatings**, the coating must be applied across the entire roof surface and meet the dry mil thickness or coverage recommended by the coatings manufacturer and meet minimum performance requirements listed in §118(i)4. Select the applicable coating:

☐ Aluminum-Pigmented Asphalt Roof Coating ☐ Cement-Based Roof Coating ☐ Other _____

Discrepancies:

Project Title:

City of Cupertino - McClellan Ranch Preserve Environmental Education Center Re-Bid

Design Firm:

SIEGEL & STRAIN Architects
1295 59th Street
Emeryville, CA 94608
510 / 547-8092
FAX 510 / 547-2604
info@siegelstrain.com

Consultant:

INTEGRAL GROUP
427 13th Street
Oakland, CA 94612
510 663-2070
510 663-2080 fax
www.integralgroup.com

Stamp:

REGISTERED PROFESSIONAL ENGINEER TYLER BRADSHAW No. M 33496 Exp. 6-30-14 MECHANICAL STATE OF CALIFORNIA

No.	Description	Date

Issue Note:

CONSTRUCTION DOCUMENTS 01/10/2014

Project ID:	11-020
File Name:	
Drawn by:	JC
Checked by:	JC
Plot Date:	01/08/2014
Scale:	NONE

Sheet Title:

TITLE 24

Sheet No.:

M1-7.1

CERTIFICATE OF COMPLIANCE AND FIELD INSPECTION ENERGY CHECKLIST

(Part 3 of 3) **ENV-1C**

Project Name: *McClellan Ranch Preserve Environmental Education Center* | Date: *7/1/2013*

Required Acceptance Tests

Designer:
This form is to be used by the designer and attached to the plans. Listed below is the acceptance test for Envelope Fenestrations system. The designer is required to check the acceptance tests and list all the fenestration products that require an acceptance test. If all the site-built fenestration of a certain type requires a test, list the different fenestration products and the number of systems. The NA7 Section in the Appendix of the Nonresidential Reference Appendices Manual describes the test. Since this form will be part of the plans, completion of this section will allow the responsible party to budget for the scope of work appropriately.

Enforcement Agency:
Systems Acceptance. Before Occupancy Permit is granted for a newly constructed building or space or whenever new fenestration is installed in the building or space shall be certified as meeting the Acceptance Requirements.
The ENV-2A form is not considered a complete form and is not to be accepted by the enforcement agency unless the boxes are checked and/or filled and signed. In addition, a Certificate of Acceptance forms shall be submitted to the enforcement agency that certifies plans, specifications, installation certificates, and operating and maintenance information meet the requirements of §10-103(b) of Title 24 Part 6. The field inspector must receive the properly filled out and signed forms before the building can receive final occupancy. A copy of the ENV-2A for each different fenestration product line must be provided to the owner of the building for their records.

Test Description		ENV-2A	Test Performed By:
Fenestration Products Name or ID Requiring Testing or Verification	Area of like Products	Building Envelope Acceptance Test	
MRE 2x LoE	*562*	☑	
		☐	
		☐	
		☐	
		☐	
		☐	
		☐	
		☐	
		☐	
		☐	
		☐	
		☐	
		☐	
		☐	
		☐	
		☐	
		☐	
		☐	
		☐	
		☐	
		☐	
		☐	
		☐	
		☐	
		☐	

AIR SYSTEM REQUIREMENTS

(Part 1 of 2) **MECH-2C**

Project Name: *McClellan Ranch Preserve Environmental Education Center* | Date: *7/1/2013*

Item or System Tags (i.e. AC-1, RTU-1, HP-1)	Indicate Air Systems Type (Central, Single Zone, Package, VAV, or etc...)			
		Outdoor HP	*IT Fan Coil*	*Classroom FC*
Number of Systems		*1*	*1*	*1*
MANDATORY MEASURES	Indicate Page Reference on Plans or Schedule and Indicate the applicable exception(s)			
	T-24 Sections			
Heating Equipment Efficiency	112(a)	*9.40 HSPF*	*7.70 HSPF*	*7.70 HSPF*
Cooling Equipment Efficiency	112(a)	*9.7 SEER / 15.0 EER*	*9.4 SEER / 9.2 EER*	*9.4 SEER / 9.2 EER*
HVAC Heat Pump Thermostat	112(b), 112(c)	*Yes*	*Yes*	*Yes*
Furnace Controls/Thermostat	112(c), 115(a)	*n/a*	*n/a*	*n/a*
Natural Ventilation	121(b)	*No*	*No*	*No*
Mechanical Ventilation	121(b)	*0 cfm*	*388 cfm*	*388 cfm*
VAV Minimum Position Control	121(c)	*Yes*	*Yes*	*Yes*
Demand Control Ventilation	121(c)	*No*	*No*	*No*
Time Control	122(e)	*Programmable Switch*	*Programmable Switch*	*Programmable Switch*
Setback and Setup Control	122(e)	*Setback Required*	*Setback Required*	*Setback Required*
Outdoor Damper Control	122(f)	*Auto*	*Auto*	*Auto*
Isolation Zones	122(g)	*n/a*	*n/a*	*n/a*
Pipe Insulation	123			
Duct Location/ R-value	124	*Attic, Ceiling ins. vented / 8.0*	*Attic, Ceiling ins. vented / 8.0*	*Attic, Ceiling ins. vented / 8.0*
PRESCRIPTIVE MEASURES				
Calculated Design Heating Load	144(a & b)	*n/a*	*n/a*	*n/a*
Proposed Heating Capacity	144(a & b)	*19,112 Btu/hr*	*0 Btu/hr*	*0 Btu/hr*
Calculated Design Cooling Load	144(a & b)	*n/a*	*n/a*	*n/a*
Proposed Cooling Capacity	144(a & b)	*43,991 Btu/hr*	*10,858 Btu/hr*	*11,946 Btu/hr*
Fan Control	144(c)	*Constant Volume*	*Constant Volume*	*Constant Volume*
DP Sensor Location	144(c)			
Supply Pressure Reset (DDC only)	144(c)	*Yes*	*Yes*	*Yes*
Simultaneous Heat/Cool	144(d)	*Yes*	*Yes*	*Yes*
Economizer	144(e)	*100% Outside Air*	*100% Outside Air*	*100% Outside Air*
Heat Air Supply Reset	144(f)	*Constant Temp*	*Constant Temp*	*Constant Temp*
Cool Air Supply Reset	144(f)	*Constant Temp*	*Constant Temp*	*Constant Temp*
Electric Resistance Heating[1]	144(g)			
Air Cooled Chiller Limitation	144(i)			
Duct Leakage Sealing, if Yes, a MECH-4-A must be submitted	144(k)	*No*	*No*	*No*

1. Total installed capacity (MBtu/hr) of all electric heat on this project exclusive of electric auxiliary heat for heat pumps. If electric heat is used explain which exception(s) to §144(g) apply.

ENVELOPE MANDATORY MEASURES: NONRESIDENTIAL

ENV-MM

Project Name: *McClellan Ranch Preserve Environmental Education Center* | Date: *7/1/2013*

DESCRIPTION

Building Envelope Measures:

§118(a):	Installed insulating material shall have been certified by the manufacturer to comply with the California Quality Standards for insulating material, Title 20 Chapter 4, Article 8.
§118(c):	All Insulating Materials shall be installed in compliance with the flame spread rating and smoke density requirements of Sections 2602 and 707 of Title 24, Part 2.
§118(f):	The opaque portions of framed demising walls in nonresidential buildings shall have insulation with an installed R-value of no less than R-13 between framing members.
§117(a):	All Exterior Joints and openings in the building that are observable sources of air leakage shall be caulked, gasketed, weatherstripped or otherwise sealed.
§116(a) 1:	Manufactured fenestration products and exterior doors shall have air infiltration rates not exceeding 0.3 cfm/ft.^{2} of window area, 0.3 cfm/ft.^{2} of door area for residential doors, 0.3 cfm/ft.^{2} of door area for nonresidential single doors (swinging and sliding), and 1.0 cfm/ft.^{2} for nonresidential double doors (swinging).
§116(a) 2:	Fenestration U-factor shall be rated in accordance with NFRC 100, or the applicable default U-factor.
§116(a) 3:	Fenestration SHGC shall be rated in accordance with NFRC 200, or NFRC 100 for site-built fenestration, or the applicable default SHGC.
§116(b):	Site Constructed Doors, Windows and Skylights shall be caulked between the unit and the building, and shall be weatherstripped (except for unframed glass doors and fire doors).

MECHANICAL MANDATORY MEASURES: NONRESIDENTIAL

MECH-MM

Project Name: *McClellan Ranch Preserve Environmental Education Center* | Date: *7/1/2013*

Equipment and System Efficiencies

§111:	Any appliance for which there is a California standard established in the Appliance Efficiency Regulations will comply with the applicable standard.
§115(a):	Fan type central furnaces shall not have a pilot light.
§123:	Piping, except that conveying fluids at temperatures between 60 and 105 degrees Fahrenheit, or within HVAC equipment, shall be insulated in accordance with Standards Section 123.
§124:	Air handling duct systems shall be installed and insulated in compliance with Sections 601, 602, 603, 604, and 605 of the CMC Standards.

Controls

§122(e):		Each space conditioning system shall be installed with one of the following:
	1A.	Each space conditioning system serving building types such as offices and manufacturing facilities (and all others not explicitly exempt from the requirements of Section 112 (d)) shall be installed with an automatic time switch with an accessible manual override that allows operation of the system during off-hours for up to 4 hours. The time switch shall be capable of programming different schedules for weekdays and weekends and have program backup capabilities that prevent the loss of the device's program and time setting for at least 10 hours if power is interrupted; or
	1B.	An occupancy sensor to control the operating period of the system; or
	1C.	A 4-hour timer that can be manually operated to control the operating period of the system.
	2.	Each space conditioning system shall be installed with controls that temporarily restart and temporarily operate the system as required to maintain a setback heating and/or a setup cooling thermostat setpoint.
§122(g):		Each space conditioning system serving multiple zones with a combined conditioned floor area more than 25,000 square feet shall be provided with isolation zones. Each zone: shall not exceed 25,000 square feet; shall be provided with isolation devices, such as valves or dampers that allow the supply of heating or cooling to be setback or shut off independently of other isolation areas; and shall be controlled by a time control device as described above.
§122(c):		Thermostats shall have numeric setpoints in degrees Fahrenheit (F) and adjustable setpoint stops accessible only to authorized personnel.
§122(b):		Heat pumps shall be installed with controls to prevent electric resistance supplementary heater operation when the heating load can be met by the heat pump alone
§122(a&b):		Each space conditioning system shall be controlled by an individual thermostat that responds to temperature within the zone. Where used to control heating, the control shall be adjustable down to 55 degrees F or lower. For cooling, the control shall be adjustable up to 85 degrees F or higher. Where used for both heating and cooling, the control shall be capable of providing a deadband of at least 5 degrees F within which the supply of heating and cooling is shut off or reduced to a minimum.

Ventilation

§121(e):	Controls shall be provided to allow outside air dampers or devices to be operated at the ventilation rates as specified on these plans.
§122(f):	All gravity ventilating systems shall be provided with automatic or readily accessible manually operated dampers in all openings to the outside, except for combustion air openings.
§121(f):	Ventilation System Acceptance. Before an occupancy permit is granted for a newly constructed building or space, or a new ventilating system serving a building or space is operated for normal use, all ventilation systems serving the building or space shall be certified as meeting the Acceptance Requirements for Code Compliance.

Service Water Heating Systems

§113(c)		Installation
	3.	Temperature controls for public lavatories. The controls shall limit the outlet Temperature to 110°F.
	2.	Circulating service water-heating systems shall have a control capable of automatically turning off the circulating pump when hot water is not required.

Project Title:

City of Cupertino - McClellan Ranch Preserve
Environmental Education Center
Re-Bid

Design Firm:
SIEGEL & STRAIN Architects
1295 59th Street
Emeryville, CA 94608
510 / 547-8092
FAX 510 / 547-2604
info@siegelstrain.com

Consultant:
INTEGRAL GROUP
427 13th Street
Oakland, CA 94612
510 663-2070
510 663-2080 fax
www.integralgroup.com

Stamp:

REGISTERED PROFESSIONAL ENGINEER
TYLER BRADSHAW
No. M 33496
Exp. 6-30-14
MECHANICAL
STATE OF CALIFORNIA

No.	Description	Date

Issue Note:
CONSTRUCTION DOCUMENTS
01/10/2014

Project ID:	11-020
File Name:	
Drawn by:	JC
Checked by:	JC
Plot Date:	01/08/2014
Scale:	NONE

Sheet Title:
TITLE 24

Sheet No.:
M1-7.2

ABBREVIATIONS

A

ABV	ABOVE
AC	ALTERNATING CURRENT
ACU	AIR–CONDITIONING UNIT(S)
ADA	AMERICANS WITH DISABILITIES ACT
ADAAG	AMERICANS WITH DISABILITIES ACT ACCESSIBILITY GUIDELINES
ADDL	ADDITIONAL
ADJ	ADJUSTABLE
AF	ABOVE THE FLOOR
AFF	ABOVE FINISHED FLOOR
AGA	AMERICAN GAS ASSOCIATION
AHP	AIR HORSEPOWER
AHU	AIR–HANDLING UNIT
AIR COND	AIR CONDITION(–ING, –ED)
AISI	AMERICAN IRON AND STEEL INSTITUTE
ALT	ALTERNATE
AMB	AMBIENT
AMP	AMPERE (AMP, AMPS)
ANSI	AMERICAN NATIONAL STANDARDS INSTITUTE
AP	ACCESS PANEL
ARCH	ARCHITECT, ARCHITECTURAL
ARF	ABOVE RAISED FLOOR
ASC	ABOVE SUSPENDED CEILING
ASHRAE	AMERICAN SOCIETY OF HEATING, REFRIGERATION AND AIR CONDITIONING ENGINEERS
ASME	AMERICAN SOCIETY OF MECHANICAL ENGINEERS
ASPE	AMERICAN SOCIETY OF PLUMBING ENGINEERS
ASSE	AMERICAN SOCIETY OF SANITARY ENGINEERS
ASTM	AMERICAN SOCIETY FOR TESTING AND MATERIALS
ATC	ACOUSTICAL TILE CEILING
ATM	ATMOSPHERE
AV	ACID VENT
AW	ACID WASTE
AWG	AMERICAN WIRE GAUGE
AWS	AMERICAN WELDING SOCIETY
AWWA	AMERICAN WATER WORKS ASSOCIATION

B

B&S	BELL AND SPIGOT
BDY	BOUNDARY
BEL	BELOWL
BFP	BACKFLOW PREVENTER
BHP	BRAKE HORSEPOWER
BLDG	BUILDING
BLR	BOILER
BM	BEAM
BOD	BOTTOM OF DUCT
BOM	BILL OF MATERIAL
BOP	BOTTOM OF PIPE
BOT	BOTTOM
BRF	BELOW RAISED FLOOR
BSMT	BASEMENT
BT	BATHTUB
BTU	BRITISH THERMAL UNIT
BTUH	BRITISH THERMAL UNITS PER HOUR
BV	BUTTERFLY VALVE
BWV	BACK WATER VALVE

C

C	DEGREES CELSIUS
CA	COMPRESSED AIR
CAB	CABINET
CAP	CAPACITY
CB	CATCH BASIN
CCT	CIRCUIT
CD	CONDENSATE DRAIN
CF	CUBIC FEET
CFM	CUBIC FEET PER MINUTE
CFS	CUBIC FEET PER SECOND
CISP	CAST IRON SOIL/SEWER PIPE
CISPI	CAST IRON SOIL PIPE INSTITUTE
CL	CENTERLINE
CLG	CEILING
CMU	CONCRETE MASONRY UNIT
CNTR	CENTER
CO	CLEANOUT
COEF	COEFFICIENT
COL	COLUMN
COM	COMMON
CONC	CONCRETE
CONN	CONNECTION
COND	CONDENS(–ER, –ING, –ATION)
CONST	CONSTRUCTION
CONTR	CONTRACTOR
CS	CAST STEEL
CTR	CENTER
CU	COPPER (CHEMICAL ABBREVIATION)
CU FT	CUBIC FEET
CU IN	CUBIC INCH
CV	CHECK VALVE
CW	COLD WATER
CWP	CIRCULATING WATER PUMP

D

D	DEEP
DB	DECIBEL
DBL	DOUBLE
DC	DIRECT CURRENT
DCV	DETECTOR CHECK VALVE
DEG	DEGREE
DEMO	DEMOLITION
DEPT	DEPARTMENT
DET	DETAIL
DF	DRINKING FOUNTAIN
DFU	DRAINAGE FIXTURE UNIT
DI	DEIONIZED WATER
DIA	DIAMETER
DIM	DIMENSION
DN	DOWN
DP	DEPTH OR DEEP
DS	DOWNSPOUT
DSP	DRY STANDPIPE
DW	DISTILLED WATER
DWG	DRAWING

E

E	EXISTING
EA	EACH
EFF	EFFICIENCY
ELEC	ELECTRICAL
EMER	EMERGENCY
ENCL	ENCLOSURE
ENG	ENGINEER
ENT	ENTRANCE
EQ	EQUAL
EST	ESTIMATE
EVAP	EVAPORAT(–E, –ING, –ED, –OR)
EWC	ELECTRIC WATER COOLER
EWH	ELECTRIC WATER HEATER
EWT	ENTERING WATER TEMPERATURE
EXP	EXPOSED
EXT	EXTINGUISH

F

F	FAHRENHEIT
FA	FIRE ALARM
FACP	FIRE ALARM CONTROL PANEL
FCO	FLOOR CLEANOUT
FD	FLOOR DRAIN
FDC	FIRE DEPARTMENT CONNECTION
FE	FIRE EXTINGUISHER
FEC	FIRE EXTINGUISHER CABINET
FF	FINISHED FLOOR
FFE	FINISHED FLOOR ELEVATION
FG	FINISH GRADE
FH	FIRE HOSE
FHC	FIRE HOSE CABINET
FHR	FIRE HOSE RACK
FHS	FIRE HOSE STATION
FHY	FIRE HYDRANT
FIXT	FIXTURE
FL	FLOOR
FND	FOUNDATION
FP	FIRE PROTECTION MAIN
FPM	FEET PER MINUTE
FPS	FEET PER SECOND
FR	FIRE RISER
FS	FLOOR SINK
FT	FEET
FU	FIXTURE UNIT
FURN	FURNISH
FUT	FUTURE
FVC	FIRE VALVE CABINET
FW	FIRE WATER

G

G	GAS
GA	GAGE OR GAUGE
GAL	GALLON
GC	GENERAL CONTRACTOR
GCO	GRADE CLEANOUT
GND	GROUND
GOVT	GOVERNMENT
GP	GALVANIZED PIPE
GPD	GALLONS PER DAY
GPF	GALLONS PER FLUSH GPM GALLONS PER MINUTE
GPH	GALLONS PER HOUR
GPS	GALLONS PER SECOND
GV	GALVANIZED
GVA	GATE VALVE

H

H	HIGH
HB	HOSE BIB
HD	HEAD
HDR	HEADER
HOR	HORIZONTAL
HP	HORSE POWER
HR	HOUR
HRS	HOURS
HT	HEIGHT
HTG	HEATING
HTR	HEATER
HVAC	HEATING, VENTILATION & AIR CONDITIONING
HW	HOT WATER
HWH	HOT WATER HEATER
HWR	HOT WATER RETURN
HZ	HERTZ (CYCLES PER SECOND)

I

I	IRON
IBV	INDICATING BUTTERFLY VALVE
ICW	INDUSTRIAL COLD WATER
ID	INSIDE DIAMETER
IE	INVERT ELEVATION
IHW	INDUSTRIAL HOT WATER
IHWR	INDUSTRIAL HOT WATER RETURN
INC	INCREASER, INCREASING
IN	INCH
INCL	INCLUDE
INCR	INCREASE
INFO	INFORMATION
INS	INSULATION
INSP	INSPECT
INSUL	INSULATION
INT	INTERIOR, INTERNAL
INV	INVERT
IP	IRON PIPE
IPS	IRON PIPE SIZE
IW	INDIRECT WASTE

J

J–BOX	JUNCTION BOX
JC	JANITOR'S CLOSET

K

KF	KITCHEN FIXTURE
KW	KILOWATT
KWH	KILOWATT HOUR
KVA	KILOVOLT–AMPERE
KW	KILOWATT

L

L	LENGTH
LAB	LABORATORY
LAT	LATERAL
LAV	LAVATORY
LBS	POUNDS
LD	LEAK DETECTION
LF	LINEAR FEET
LG	LENGTH
LH	LEFT HAND
LPD	LOW POINT DRAIN
LV	LAB VENT
LW	LAB WASTE

M

MAX	MAXIMUM
MCC	MOTOR CONTROL CENTER
ME	MECHANICAL ENGINEER
MECH	MECHANICAL
MFR	MANUFACTURER
MGD	MILLION GALLONS PER DAY
MH	MANHOLE
MIN	MINIMUM
MISC	MISCELLANEOUS
MS	MOP SINK
MTR	MOTOR
MWP	MAXIMUM WORKING PRESSURE

N

N	NITROGEN
NC	NORMALLY CLOSED
NEC	NATIONAL ELECTRICAL CODE
NFWH	NON–FREEZE WALL HYDRANT
NOM	NOMINAL
NRS	NON RISING STEAM VALVE
NTS	NOT TO SCALE
N/A	NOT APPLICABLE
NBS	NATIONAL BUREAU OF STANDARDS
NC	NOISE CRITERIA
NFPA	NATIONAL FIRE PROTECTION ASSOCIATION
NO,#	NUMBER
NPS	NOMINAL PIPE SIZE (ALSO CALLED IPS)
NPSHR	NET POSITIVE SUCTION HEAD REQUIRED
NTS	NOT TO SCALE

O

O	OXYGEN (CHEMICAL ABBREVIATION)
OC	ON CENTER
ODIA	OUTSIDE DIAMETER
OD	OVERFLOW DRAIN
OSD	OPEN SIGHT DRAIN
OS&Y	OUTSIDE SCREW & YOKE (VALVE)
OUT	OUTLET
OZ	OUNCE

P

P	PITCH
PB	LEAD (CHEMICAL ABBREVIATION)
PD	PLAZA DRAIN, PRESSURE DROP, OR DIFFERENCE
PDI	PLUMBING DRAINAGE INSTITUTE
PE	PROFESSIONAL ENGINEER
PERIM	PERIMETER
PG	PRESSURE GAUGE
PH	PHASE (ELECTRICAL)
PIV	POST INDICATOR VALVE
PL	PROPERTY LINE
PLBG	PLUMBING
POC	POINT OF CONNECTION
PPM	PARTS PER MILLION
PRESS	PRESSURE
PRIM	PRIMARY
PRV	PRESSURE REDUCING VALVE
PSI	POUNDS PER SQUARE INCH
PSIA	POUNDS PER SQUARE INCH ABSOLUTE
PSIG	POUNDS PER SQUARE INCH GAUGE
PV	PUMP VACUUM
PVC	POLYVINYL CHLORIDE
PW	PURE WATER
PWR	PURE WATER RETURN
PWR	POWER

Q

QT	QUART
QTY	QUANTITY

R

R	HYDRAULIC RADIUS
RAD	RADIUS
RCP	REFLECTED CEILING PLAN
RCVR	RECEIVER
RD	ROOF DRAIN
REQIRC	RECIRCULATE
REF	REFERENCE
REQD	REQUIRED
RET	RETURN
REV	REVISION
RF	ROOF
RH	RIGHT HAND
RL	ROOF LEADER
RM	ROOM
RO	REVERSE OSMOSIS
RPBFP	REDUCED PRESSURE BACKFLOW PREVENTER
RPM	REVOLUTIONS PER MINUTE
RW	RAW WATER
RWC	RAIN WATER CONDUCTOR
RWL	RAIN WATER LEADER

S

SD	STORM WATER
SK	SINK
S&W	SOIL & WASTE
SAN	SANITARY
SB	SPLASH BLOCK
SCFM	CUBIC FT PER MINUTE, STANDARD CONDITIONS
SCFS	CUBIC FT PER SEC, STANDARD CONDITIONS
SCH	SCHEDULE
SCUP	SCUPPER
SD	STORM DRAIN
SEC	SECOND
SECT	SECTION
SERV	SERVICE
SEV	SEWAGE EJECTOR VENT
SF	SQUARE FOOT
SH	SHOWER
SHT	SHEET
SIM	SIMILAR
SLV	SLEEVE
SOV	SHUTOFF VALVE
SP	STANDPIPE
SP	PRESSURE, STATIC
SPEC	SPECIFICATION
SPD	SUMP PUMP DISCHARGE
SPM	SPRINKLER MAIN
SS	SERVICE SINK
STD	STANDARD
STL	STEEL
SUCT	SUCTION
SV	SAFETY RELIEF VALVE
SQ	SQUARE
SQ FT	SQUARE FEET
SS	SERVICE SINK
ST	SANITARY TAP
STD	STANDARD

T

T	TEE
T&P	TEMPERATURE & PRESSURE RELIEF VALVE
TD	TRENCH DRAIN
TEMP	TEMPERATURE
TLT	TOILET
TW	TEMPERED WATER
TWR	TEMPERED WATER RETURN
TYP	TYPICAL
TAP	TAP, TAPPED
TOT	TAP ON TOP
TP	TRAP SEAL PRIMER
TY	TEE WYE, (SAN TEE)
TYP	TYPICAL

U

UR	URINAL
UON	UNLESS OTHERWISE NOTED

V

V	VENT
VT	VOLT
VOL	VOLUME
VAC	VACUUM
VAR	VARIABLE
VB	VALVE BOX
VEL	VELOCITY
VERT	VERTICAL
VLV	VALVE
VOL	VOLUME
VP	VENT PIPE
VS	VENT STACK
VTR	VENT THROUGH ROOF

W

W	WATT
W	WASTE
W/	WITH
W/O	WITHOUT
WC	WATER CLOSET
WCO	WALL CLEANOUT
WFS	WATER FLOW SWITCH
WH	WATER HEATER
WM	WATER METER
WS	WATER STOP
WH	WALL HYDRANT
WL	WATER LEVEL
WP	WEATHERPROOF
WSFU	WATER SUPPLY FIXTURE UNIT
WT	WEIGHT

MISCELLANEOUS

%	PERCENT
(E)	EXISTING
(N)	NEW
@	AT (THE RATE OF)
&	AND
#	NUMBER

PIPE FITTING SYMBOLS

SYMBOL	DESCRIPTION
	CLEAN OUT
	PIPE BRANCH, BOTTOM
	PIPE BRANCH, TEE
	PIPE BRANCH, TOP
	PIPE CAP
	PIPE RISE
	PRESSURE GUAGE
	STRAINER
	STRAINER, BASKET
	TEMPERATURE GAUGE
	TEMP & PRESSURE FITTING
	UNION
	UNION FLANGED
	SLOPE IN DIRECTION
	POINT OF CONNECTION
WM	WATER METER

PLUMBING SYMBOLS

SYMBOL	DESCRIPTION
	FLOORDRAIN W/ROUND GRATE
	FLOOR CLEANOUT/GRADE CLEANOUT
	FLOOR SINK
	FLOOR SINK W/ HALF GRATE
GM	GAS METER
	FLOW OR PRESSURE SWITCH
	DROP AT END
	RISE AT END
	BRANCH TOP
	DROP BOTTOM
	RISE AT MID
	SANITARY TEE
	TRAP PRIMER
	HOSE BIBB, PLAN
	FIRE DEPARTMENT CONNECTION
	SHUTOFF VALVE IN VERTICAL RISE
	WALL CLEANOUT
	FLOOR DRAIN W/ SQUARE GRATE
	ROOF DRAIN
	VENT THROUGH ROOF
BFP	BACKFLOW PREVENTER
	1 HR RATED WALL

VALVE SYMBOLS

SYMBOL	DESCRIPTION
	2–WAY CONTROL VALVE
	3–WAY CONTROL VALVE
	BALL VALVE
	BELLOWS VALVE
	BUTTERFLY VALVE
	BUTTERFLY VALVE W/OPERATOR
	CHECK VALVE
	CHECK VALVE, BALL
	CIRCUIT SETTER
	CYROGENIC VALVE
	DIAPHRAGM VALVE
	DIAPHRAGM VALVE W/OPERATOR
	FLOAT VALVE
	FLOW CONTROL VALVE
	FLOW ORFICE
	GATE VALVE
	GATE VALVE, ANGLE
	GATE VALVE, FLANGED
	GATE VALVE, FLANGED ANGLE
	GLOBE VALVE
	GLOBE VALVE, FLANGED
	GLOBE VALVE, ANGLE
	GLOBE VALVE, FLANGED ANGLE
	NEEDLE VALVE
	OS&Y VALVE
	PRESSURE RELIEF VALVE
	PRV
	PRV, GAS
	PRV, LINE FEED
	PRV, VALVE BODY FEED
	RELIEF VALVE
	SOLENOID VALVE
	VACUUM BREAKER

MISC. SYMBOLS

XX / XX	DETAIL NUMBER AND SHEET
XX / X	EQUIPMENT TAG
X / X	RISER TAG

PLUMBING LEGEND

SYMBOL	ABBREVIATION	DESCRIPTION
	CW	COLD WATER
	HW	HOT WATER SUPPLY
	HWR	HOT WATER RETURN
	SAN	SANITARY
	SAN (UNFL)	SANITARY (UNDERFLOOR)
	V	SANITARY VENT
G	G	GAS

GENERAL NOTES

1.PROVIDE A COMPLETE PLUMBING SYSTEM AS INDICATED WITH WASTE & VENT AND HOT & COLD WATER CONNECTIONS. ALL WORK WILL BE PERFORMED IN ACCORDANCE WITH THE CALIFORNIA PLUMBING CODE, AND CALIFORNIA MECHANICAL CODE, UNIFORM BUILDING CODE AND LOCAL RULES AND REGULATIONS, STATE FIRE MARSHALL REGULATIONS, THE SAFETY ORDERS OF THE DIVISION OF INDUSTRIAL SAFETY; THE NATIONAL ELECTRIC CODE; THE STANDARDS OF THE NATIONAL FIRE PROTECTION ASSOCIATION; AMERICAN GAS ASSOCIATION; OCCUPATION AND SAFETY ACT; AMERICAN NATIONAL STANDARDS INSTITUTE; AMERICAN SOCIETY OF MECHANICAL ENGINEERS; AMERICAN SOCIETY FOR TESTING AND MATERIALS; INSTALLATION STANDARDS PUBLISHED BY THE INTERNATIONAL ASSOCIATION OF PLUMBING AND MECHANICAL OFFICIALS (IAPMO) AND OTHER APPLICABLE LAWS, CODES, OR REGULATIONS. NOTHING IN THESE PERFORMANCE SPECIFICATIONS SHALL BE CONSTRUED TO PERMIT WORK NOT CONFORMING TO THESE CODES.

2.PLUMBING FIXTURES SHALL HAVE THE FOLLOWING MAXIMUM FLOW RATE:
WATER CLOSETS (TANK TYPE) = 1.28 GAL. PER FLUSH
LAVATORIES = 0.35 GAL. PER MINUTE

3.VERIFY LOCATION OF EXISTING WASTE AND WATER PRIOR TO PERFORMING WORK.

4.INSULATE HOT WATER PIPING WITH ARMEFLEX INSULATION (OR EQUAL). SEE SPECIFICATIONS FOR INSULATION THICKNESS.

5.EXACT LOCATIONS, MOUNTING HEIGHTS AND COLOR OF PLUMBING FIXTURES SHALL BE OBTAINED FROM THE ARCHITECTURAL DRAWINGS.

6.ALL VALVES, UNIONS, ETC. TO BE SAME SIZE AS LINE SIZE UNLESS OTHERWISE INDICATED ON DRAWINGS.

7.UNIONS SHALL BE PROVIDED AND INSTALLED AFTER EACH SCREW–TYPE VALVE AND PRIOR TO EQUIPMENT CONNECTIONS.

8.BEFORE FABRICATION OR INSTALLATION, THE CONTRACTOR SHALL VERIFY EXACT LOCATIONS OF ALL MECHANICAL EQUIPMENT. EXACT ROUGH–IN LOCATIONS AND REQUIREMENTS SHALL BE COORDINATED IN FIELD.

9.PIPING IN ANY PARTITIONS, THROUGH PLATES, STUDS, ETC., SHALL HAVE SUFFICIENT CLEARANCE FROM THE STRUCTURE TO ALLOW FOR EXPANSION AND CONTRACTION OF THE PIPING. NO BARE PIPING SHALL TOUCH WOOD, CONCRETE, ETC., AT ANY TIME.

10.COORDINATE ALL CORING OF FLOORS AND WALLS WITH ARCHITECT PRIOR TO INSTALLATION OR FABRICATION.

11.ALL EQUIPMENT, FIXTURES, ETC. SHALL BE INSTALLED IN STRICT ACCORDANCE WITH THE MANUFACTURERS RECOMMENDATIONS.

12.INTERRUPTION OF ANY EXISTING SERVICES SHALL BE KEPT TO A MINIMUM. SHUTDOWNS SHALL BE MADE ONLY WITH APPROVAL OF AND AT TIMES DESIGNATED BY THE OWNER. THE CONTRACTOR SHALL INCLUDE OVERTIME WORK COST IN HIS BID FOR THIS WORK.

13.PROVIDE TEMPORARY SERVICES WHEN ANY EXISTING SERVICES ARE INTERRUPTED IN CONNECTION WITH WORK OF THIS SECTION BEYOND THE PERIOD OF TIME ACCEPTABLE AND APPROVED BY THE OWNER.

14.THE CONTRACTOR SHALL FURNISH ALL LABOR, MATERIALS, AND EQUIPMENT NECESSARY AND PERFORM ALL REQUIRED TESTING OF ALL PIPING, FIXTURES, EQUIPMENT, AND ACCESSORIES INSTALLED. ALL SUCH PLUMBING INSTALLATIONS SHALL BE TESTED, REPAIRED, AND ADJUSTED TO THE SATISFACTION OF THE OWNER'S REPRESENTATIVE AND ALL GOVERNING AUTHORITIES.

15.EXISTING CONDITIONS, INCLUDING INVERTS OF DRAINS, SIZES AND LOCATIONS OF EXISTING SEWERS, WATER MAINS, GAS MAINS, GRADES, ETC., SHALL BE EXAMINED BY THE CONTRACTOR PRIOR TO ANY INSTALLATION OR FABRICATION, AND IT SHALL BE UNDERSTOOD THAT THE PRICE QUOTED SHALL INCLUDE ALL WORK NECESSARY TO PROVIDE A COMPLETE WORKABLE SYSTEM WITHIN THE REQUIREMENTS OF APPROPRIATE CODES AND FULLY ADAPTED TO THE EXISTING CONDITIONS. THE CONTRACTOR SHALL DISCONNECT, SEAL OFF AND REMOVE ANY EXISTING SERVICES WHERE NO LONGER REQUIRED, AND REROUTE SERVICES WHERE NECESSARY.

16.BEFORE BIDDING THE JOB, INVESTIGATE, DETERMINE AND VERIFY LOCATIONS AND INVERT ELEVATIONS OF SANITARY AND STORM SEWERS, CITY WATER MAINS, AND ANY OTHER BURIED OR OVERHEAD UTILITIES ON OR NEAR SITE. DETERMINE SUCH LOCATIONS IN CONJUNCTION WITH ALL PUBLIC AND PRIVATE UTILITY COMPANIES AND WITH ALL AUTHORITIES HAVING JURISDICTION.

18.FOLLOWING THE GENERAL ARRANGEMENT INDICATED ON THE DRAWINGS AS CLOSELY AS POSSIBLE, THE CONTRACTOR SHALL COORDINATE WITH THE ARCHITECTURAL, STRUCTURAL, MECHANICAL, PLUMBING, ELECTRICAL AND ALL OTHER TRADES PRIOR TO INSTALLATION OF THE MATERIALS AND EQUIPMENT TO VERIFY ADEQUATE SPACE AVAILABLE FOR INSTALLATION OF THE WORK SHOWN. THE ARCHITECT AND ENGINEER SHALL BE IMMEDIATELY NOTIFIED IF AN AREA OF CONFLICT OCCURS BETWEEN TRADES.

19.SPECIFICATIONS ARE AN INTEGRAL PART OF THIS PROJECT. CONTRACTORS ARE RESPONSIBLE FOR FOLLOWING SPECIFICATION REQUIREMENTS.

20.ALL FIXTURES, FLOOR DRAINS, FLOOR SINKS, ETC. SHALL BE TRAPPED AND VENTED AND TRAP PRIMERS SHALL BE PROVIDED. ALL TRAP PRIMERS SHALL BE ACCESSIBLE AND PROVIDED WITH A 12"X12" ACCESS PANEL (MINIMUM).

PLUMBING DRAWING LIST	
P0-0.1	PLUMBING LEGEND, SYMBOLS & GENERAL NOTES
P0-0.2	PLUMBING SCHEDULES
P1-2.1	ENVIRONMENTAL EDUCATION CENTER - PLUMBING FLOOR PLAN
P3-2.1	BLACKSMITH SHOP - PLUMBING FLOOR PLAN
P6.1	PLUMBING DETAILS
P6.2	PLUMBING DETAILS
P6.3	PLUMBING DETAILS

Project Title:

City of Cupertino - McClellan Ranch Preserve
Environmental Education Center
Re-Bid

Design Firm:
SIEGEL & STRAIN Architects
1295 59th Street
Emeryville, CA 94608
510 / 547-8092
FAX 510 / 547-2604
info@siegelstrain.com

Consultant:
INTEGRAL GROUP
427 13th Street
Oakland, CA 94612
510 663-2070
510 663-2080 fax
www.integralgroup.com

Stamp:

REGISTERED PROFESSIONAL ENGINEER
TYLER BRADSHAW
No. M 33496
Exp. 6-30-14
MECHANICAL
STATE OF CALIFORNIA

No.	Description	Date

Issue Note:
CONSTRUCTION DOCUMENTS
01/10/2014

Project ID:	11-020
File Name:	
Drawn by:	NC
Checked by:	SA
Plot Date:	01/08/2014
Scale:	1/8" = 1'-0"

Sheet Title:
PLUMBING LEGEND, SYMBOLS & GENERAL NOTES

Sheet No.:
P0-0.1

DRAIN, CLEANOUT, AND PLUMBING SPECIALTY SCHEDULE

PLAN MARK	DESCRIPTION	MANUFACTURER	MODEL	COVER / STRAINER TYPE	REMARKS
FD-1	FLOOR DRAIN	ZURN	FD-2321	5" DIA, TOP	CHROME PLATED STRAINER, CAST IRON BODY, CLAMPING COLLAR.
FD-2	MECHANICAL FLOOR DRAIN	J.R. SMITH	3970	10 1/2" DIA, TOP	PROTRUDES 2 1/2" ABOVE FLOOR, CAST IRON BODY.
AD-1	AREA DRAIN	ZURN	FD-2321	5" DIA, TOP	NICKEL BRONZE STRAINER, CAST IRON BODY, CLAMPING COLLAR.
AD-2	AREA DRAIN (PLANTER DRAIN)	JAY R. SMITH	1901	13" DIA, TOP	DUCO CAST IRON BODY, FLASHING CLAMP, STAINLESS STEEL PERFORATED GRAVEL STOP, WITH PVC STANDPIPE WITH ORIFICE.
AD-3	AREA DRAIN (PLANTER DRAIN)	JAY R. SMITH	1902	13" DIA, TOP	DUCO CAST IRON BODY, FLASHING CLAMP, GRAVEL STOP, WITH PERFORATED STAINLESS STEEL DOME COVER AND REMOVABLE LID
RD/OD	ROOF DRAIN / OVERFLOW DRAIN	ZURN	Z165	8 3/8" DIA, TOPS	DUCO CAST IRON BODY, FLASHING CLAMP, GRAVEL STOP, LOW SILHOUETTE CAST IRON DOMES. 2 5/16" RIM SURROUNDING OVERFLOW DRAIN.
FCO	FLOOR CLEANOUT	J.R. SMITH	4100	7" DIA,	CAST IRON CLEANOUT WITH BRONZE TOP
GCO	EXTERIOR FLOOR CLEANOUT	J.R. SMITH	4240	7" DIA,	CAST IRON CLEANOUT WITH CAST IRON TOP
WCO	WALL CLEANOUT	J.R. SMITH	4422	5 1/2" COVER	BRONZE TAPER PLUG, STAINLESS STEEL COVER, REFER TO DRAWINGS FOR SIZE AND LOCATION.
HB-1	EXTERIOR HOSE BIBB	J.R. SMITH	D5509QT	NONE	RECESSED LOCKABLE ENCLOSURE, EXTERIOR HOSE BIBB, INTEGRAL VACUUM BREAKER.
HB-2	INTERIOR HOSE BIBB	ZURN	Z1341	NONE	INTERIOR HOSE BIBB WITH INTEGRAL VACUUM BREAKER.
TP-1	TRAP SEAL PRIMER	MIFAB	MR-500	NONE	BRASS BODY WITH INTEGRAL VACUUM BREAKER - PRESSURE DROP OF 3-PSI WILL ACTIVATE ALL OF THE TRAP PRIMERS.
VTR	VENT CAP	JOSAM	26700	NONE	VENT PIPE SECURING SCREW.

PLUMBING FIXTURE COUNT AND CONNECTION SCHEDULE

PLAN MARK	FIXTURE	QTY	CONNECTION				WATER SYSTEM FIXTURE UNIT (WSFU)		DRAINAGE FIXTURE UNIT (DFU)		CALGREEN MAX FLOWRATE @ 20% REDUCTION (TABLE 5.303.2.3)	SELECTED FIXTURE FLOWRATE	REMARKS
			WASTE	VENT	CW	HW	FU	TOTAL	FU	TOTAL	GPM	GPM	
SK-1	MEETING RM SINK WITH CLAY TRAP	2	2"	1 1/2"	1/2"	1/2"	1.5	3	2.0	4	1.8	1.0	1,2,6
SK-2	MEETING RM SINK (ADA)	1	2"	1 1/2"	1/2"	1/2"	1.5	1.5	2.0	2	1.8	1.0	2,6
SK-3	OUTDOOR SINK (CUSTOM)	1	2"	1 1/2"	1/2"	1/2"	1.5	1.5	2.0	2	1.8	1.0	1,2,6
LAV-1	LAVATORY (ADA)	2	2"	1 1/2"	1/2"	-	1.0	2	1.0	2	0.4	0.35	6
MS-1	MOP SINK	1	3"	2"	1/2"	1/2"	3.0	3	3.0	3	-	-	7
WC-1	TANK TYPE WATER CLOSET (ADA)	2	4"	2"	1"	-	2.5	5	4.0	8	1.28	1.28	6
HB-1	HOSE BIBB	1	-	-	3/4"	-	2.5	2.5	-	-	-	-	3,7
HB-2	HOSE BIBB	1	-	-	3/4"	-	2.5	2.5	-	-	-	-	4,7
DF-1	DRINKING FOUNTAIN	1	2"	1 1/2"	-	1/2"	0.5	0.5	0.5	0.5	-	-	7,8
FD-1	FLOOR DRAIN	1	2"	1 1/2"	1/2"	-	-	-	2	2	-	-	7
FD-2	FLOOR DRAIN	1	2"	1 1/2"	1/2"	-	-	-	2	2	-	-	5, 7
TOTAL							21.5		18		WSFU DETERMINED FROM CPC CHAPTER 6 DFO DETERMINED FROM CPC CHAPTER 7		
DESIGN FLOW							15		-		GPM DETERMINED FROM CPC APPENDIX A CHART A-2		
LONGEST LENGTH							100		100		FT.		
PIPE SIZE							1 1/2"		4		SUPPLY PIPE DETERMINED FROM CPC TABLE 6-6 DRAINAGE PIPE DETERMINED FROM CPC TABLE 7-5		
METER SIZE							1 1/2"		-		METER SIZING DETERMINED FROM CPC TABLE 6-6		

REMARKS:
1. PROVIDE CLAY TRAP, GLECO BGGT64 TRAP OR EQUAL.
2. PER CALGREEN REQUIREMENT, SK-1,2,3 ASSUMED EQUAL TO KITCHEN SINK
3. LOCKABLE, RECESSED ENCLOSURE TYPE.
4. PROVIDE VANDAL RESISTANT KEYED HANDLE
5. OUTDOOR FLOOR DRAIN WITH 2 1/2" RIM TO PREVENT RAINWATER INTRUSION.
6. CALGREEN 5.303.2 IS MET WITH THE ABOVE SCHEDULE DEMONSTRATING
 *1. PRESCRIPTIVE METHOD. EACH PLUMBING FIXTURE AND FITTING SHALL NOT EXCEED THE MAXIMUM FLOW RATE
 AT >= 20 PERCENT REDUCTION IN THE BUILDING "WATER USE BASELINE" AS ESTABLISHED IN TABLE 5.303.2.2"
7. FIXTURE TYPE NOT INCLUDED IN CALGREEN REQUIREMENT AND THEREFORE EXEMPT FROM 20% REDUCTION.
8. HIGH/LOW OUTDOOR DRINKING FOUNTAIN. SEE SPECIFICATION.

DOMESTIC WATER HEATERS

PLAN MARK	MANUFACTURER	MODEL	TYPE	LOCATION	SERVICE	CAPACITY		OUTPUT (kW)	EFF. (%)	SIZE			WATER CONNECTION SIZE (IN.)	ELECTRICAL SERVICE	WEIGHT (LBS.)	REMARKS
						GPM	@ °F RISE			H (IN.)	W (IN.)	D (IN.)				
EWH-1	KELTECH	HL 180/208D L15	ELECTRIC TANKLESS	JANITORS CLOSET	HW	1.89	65	18.00	99	23.0	14.0	4.7	3/4	75A @ 240V/1PH	N/A	2,4
EWH-2	EEMAX	MB012240T	ELECTRIC TANKLESS	KITCHENETTE SINK	HW	1.43	55	11.50	99	13.5	5.0	4.0	1/2	50A @ 240V/1PH	8	1,3
EWH-3	EEMAX	MB012240T	ELECTRIC TANKLESS	MEETING RM (2 SINKS)	HW	1.43	55	11.50	99	13.5	5.0	4.0	1/2	50A @ 240V/1PH	8	1,3
EWH-4	EEMAX	MB005240T	ELECTRIC TANKLESS	TOILET 2	HW	0.60	55	4.80	99	13.5	5.0	4.0	1/2	20A @ 240V/1PH	8	1,3

NOTES:
1. INTEGRAL THERMOSTATIC MIXING VALVE WITH 105°F SETPOINT.
2. 120°F SETPOINT.
3. 0.3 GPM TURNON FLOWRATE
4. 0.15 GPM TURNON FLOWRATE

Project Title:

City of Cupertino - McClellan Ranch Preserve
Environmental Education Center
Re-Bid

Design Firm:
SIEGEL & STRAIN Architects
1295 59th Street
Emeryville, CA 94608
510 / 547-8092
FAX 510 / 547-2604
info@siegelstrain.com

Consultant:
INTEGRAL GROUP
427 13th Street
Oakland, CA 94612
510 663-2070
510 663-2080 fax
www.integralgroup.com

Stamp:
REGISTERED PROFESSIONAL ENGINEER
TYLER BRADSHAW
No. M 33496
Exp. 6-30-14
MECHANICAL
STATE OF CALIFORNIA

No.	Description	Date

Issue Note:
CONSTRUCTION DOCUMENTS
01/10/2014

Project ID:	11-020
File Name:	
Drawn by:	NC
Checked by:	SA
Plot Date:	01/08/2014
Scale:	1/8" = 1'-0"

Sheet Title:
PLUMBING SCHEDULES

Sheet No.:
P0-0.2

GENERAL NOTES:

1. REFER TO P0.1 FOR LIST OF GENERAL NOTES, SYMBOLS, AND ABBREVIATIONS.
2. ALL SANITARY PIPING SHALL SLOPE 1/4"/FT. UNLESS OTHERWISE NOTED.
3. PROVIDE THERMOSTATIC MIXING VALVE SET WITH TEMPERATURE SET AT 105°F FOR ALL HAND SINKS
4. MOUNT EWH-2&3 UNDER COUNTER IN CABINET.
5. REFER TO ARCHITECTURAL DRAWINGS FOR LOCATION OF OUTDOOR DRINKING FOUNTAIN.

SHEET NOTES:

1. 1/2" HW, 1 1/2" SAN, 1/2" CW TO LAV-1
2. 1/2" CW DN.
3. 1/2" CW DN. PROVIDE MANUAL SOV IN LOCKABLE EXTERIOR ACCESS PANEL.
4. 1 1/2" CW UP. CW BUILDING ENTRANCE. PROVIDE SOV ON VERTICAL PIPE.
5. 2" V UP THROUGH ROOF.
6. REFER TO ARCHITECTURAL DRAWINGS A1-2.2 & A1-8.3 FOR ROOF DRAIN / OVERFLOW DRAIN LOCATIONS AND DETAILS. SEE PLUMBING SCHEDULE FOR MODEL.
7. 3" SAN DN.
8. 4" SAN DN FROM WC-1.
9. 4" FIRE RISER WITH HUB DRAIN (SEE DETAIL).
10. 1 1/4" CD DN FROM FC-1/2. DROP IN WALL AND ROUTE TO SINK TRAP. SEE DETAIL.
11. ROUTE CD FROM HP-1,2 TO AD-3.
12. 1 1/4" CD DN FROM FC-3. DROP IN WALL AND ROUTE TO SINK P-TRAP. SEE DETAIL.
13. PROVIDE ACCESS PANEL. S.A.D.
14. 1/2" CW DN TO TP-1 IN WALL W/ ACCESS PANEL. MOUNT A MINIMUM OF 1' ABOVE FLOOR PER MANUFACTURER REQUIREMENTS. ROUTE 1/2" TP TO FD-1, FD-2 AND HD UNDERFLOOR.
15. PROVIDE THERMOSTATIC MIXING VALVE WITH 120°F TEMPERATURE SETPOINT.
16. LOCATE WITHIN CABINET. S.A.D.
17. NOT USED.
18. NOT USED.
19. NOT USED.
20. DISHWASHER DRAIN TO SINK TRAP. SEE DETAIL.
21. 3/4" HYDRONIC HEATING/COOLING MAKE-UP WATER CONNECTION. PROVIDE WATTS 009 REDUCED PRESSURE BACKFLOW ASSEMBLY, PRESSURE REDUCING VALVE AND ISOLATION VALVE AT CONNECTION. COORDINATE LOCATION WITH MECHANICAL. ROUTE 3/4" DRAIN FROM ASSEMBLY TO FLOOR DRAIN.

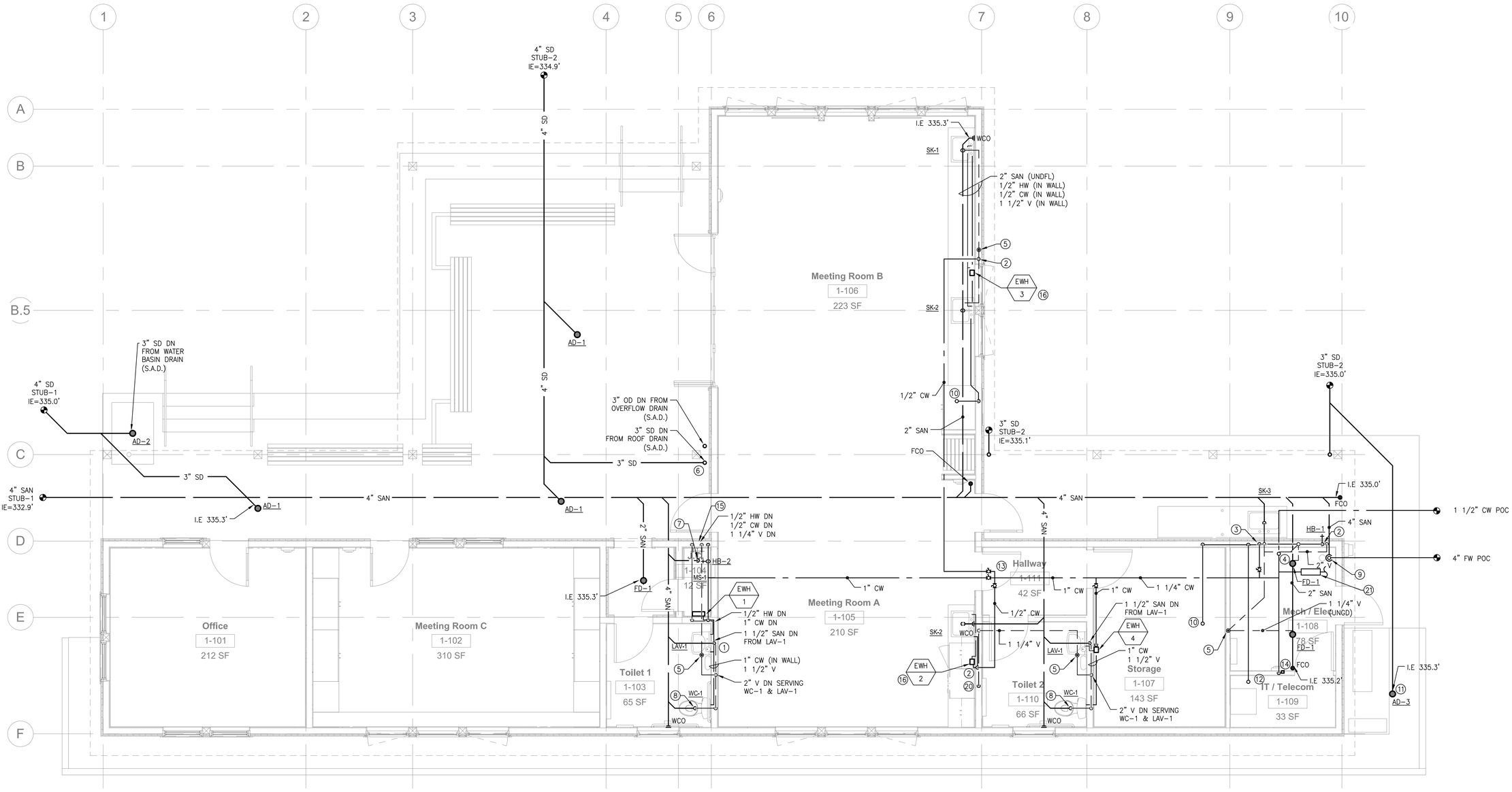

1 PLUMBING PLAN

SCALE: 1/4"=1'-0"

4 0 4 8

SCALE OF FEET

Project Title:

City of Cupertino - McClellan Ranch Preserve
Environmental Education Center
Re-Bid

Design Firm:

SIEGEL & STRAIN Architects
1295 59th Street
Emeryville, CA 94608
510 / 547-8092
FAX 510 / 547-2604
info@siegelstrain.com

Consultant:

INTEGRAL GROUP
427 13th Street
Oakland, CA 94612
510 663-2070
510 663-2080 fax
www.integralgroup.com

Stamp:

REGISTERED PROFESSIONAL ENGINEER
TYLER BRADSHAW
No. M 33496
Exp. 6-30-14
MECHANICAL
STATE OF CALIFORNIA

No.	Description	Date

Issue Note:

CONSTRUCTION DOCUMENTS
01/10/2014

Project ID:	11-020
File Name:	
Drawn by:	NC
Checked by:	SA
Plot Date:	01/08/2014
Scale:	1/8" = 1'-0"

Sheet Title:

EEC - PLUMBING FLOOR PLAN

Sheet No.:

P1-2.1

GENERAL NOTES:

1. REFER TO P0.1 FOR LIST OF GENERAL NOTES, SYMBOLS, AND ABBREVIATIONS.
2. ALL SANITARY PIPING SHALL SLOPE 1/4"/FT. UNLESS OTHERWISE NOTED.

SHEET NOTES:

1. 4" FIRE RISER WITH HUB DRAIN (SEE DETAIL). 1 1/2" VTR.
2. 3/4" CW UP TIGHT TO CEILING. PROVIDE SOV ON VERTICAL PIPE.

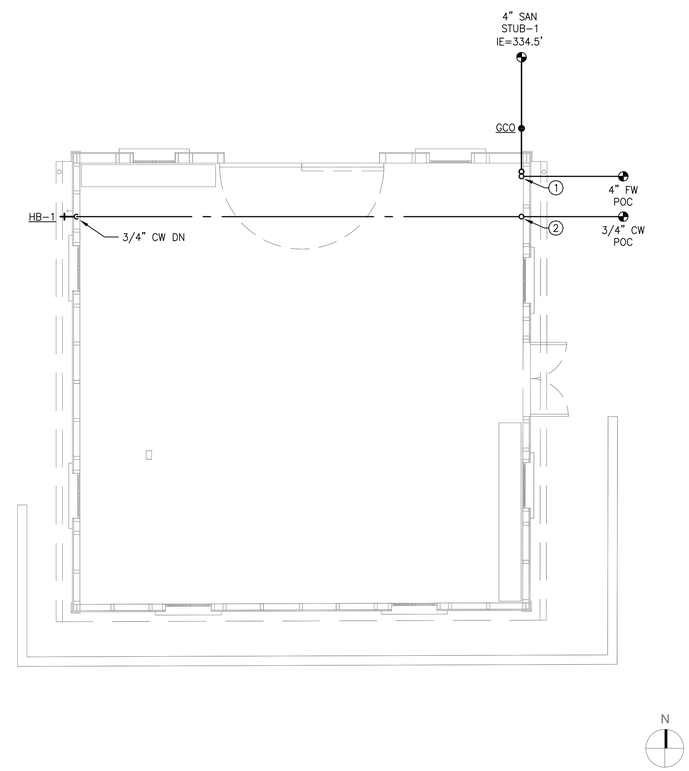

1 PLUMBING PLAN

SCALE: 1/4"=1'-0"

4 0 4 8

SCALE OF FEET

Project Title:

City of Cupertino - McClellan Ranch Preserve
Environmental Education Center
Re-Bid

Design Firm:

SIEGEL & STRAIN Architects
1295 59th Street
Emeryville, CA 94608
510 / 547-8092
FAX 510 / 547-2604
info@siegelstrain.com

Consultant:

INTEGRAL GROUP
427 13th Street
Oakland, CA 94612
510 663-2070
510 663-2080 fax
www.integralgroup.com

Stamp:

REGISTERED PROFESSIONAL ENGINEER
TYLER BRADSHAW
No. M 33496
Exp. 6-30-14
MECHANICAL
STATE OF CALIFORNIA

No.	Description	Date

Issue Note:

CONSTRUCTION DOCUMENTS
01/10/2014

Project ID:	11-020
File Name:	
Drawn by:	NC
Checked by:	SA
Plot Date:	01/08/2014
Scale:	1/4" = 1'-0"

Sheet Title:

BLACKSMITH SHOP
PLUMBING
FLOOR PLAN

Sheet No.:

P3-2.1

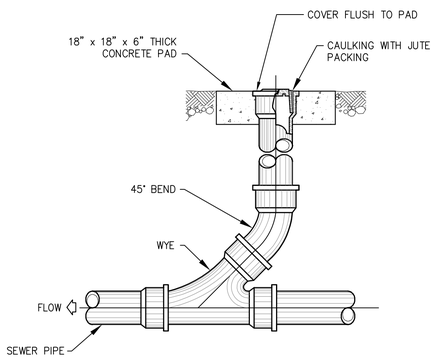

TYPICAL EXTERIOR CLEANOUT (COTG) 6

SCALE: NTS

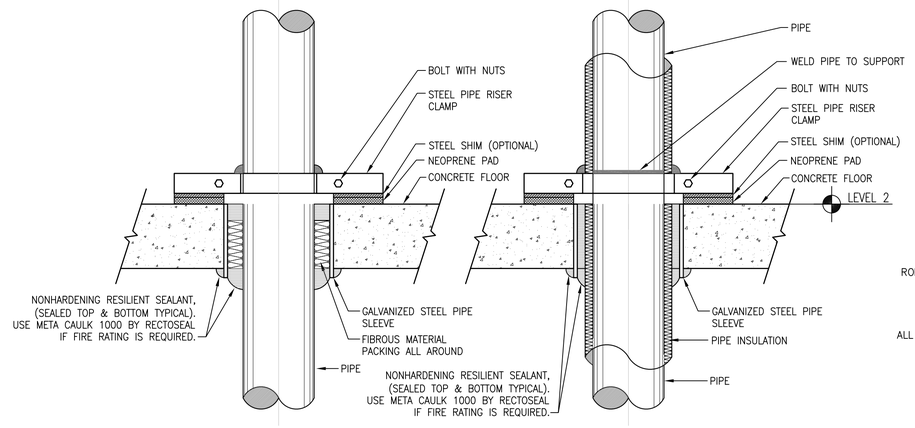

NOTE:

1. REFER TO SPECIFICATIONS FOR INSULATED PIPE RISER SUPPORTS.
2. COORDINATE RISER CLAMP ORIENTATION TO BE WITHIN WALL CAVITY.
3. SEE SPEC SECTION 15071 FIGURE 12 FOR ADDITIONAL INFORMATION.

TYPICAL PIPE FLOOR PENETRATION 4

SCALE: NTS

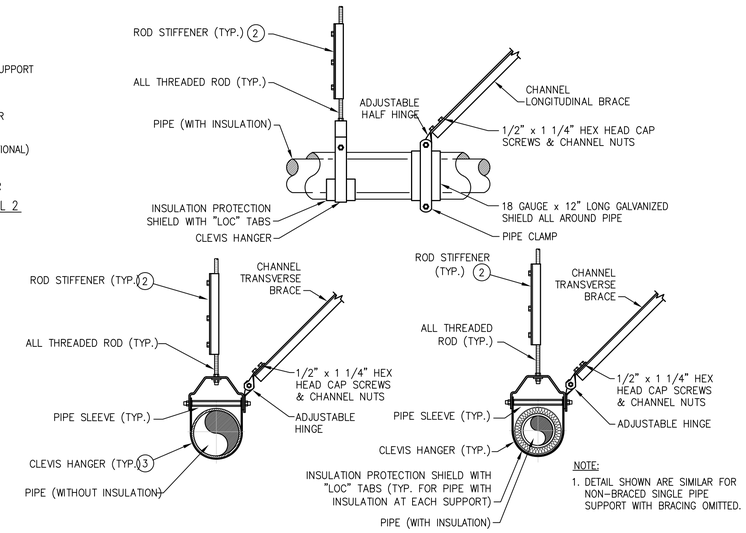

NOTE:

1. DETAIL SHOWN ARE SIMILAR FOR NON-BRACED SINGLE PIPE SUPPORT WITH BRACING OMITTED.

TYPICAL SINGLE PIPE SUPPORT 2

SCALE: NTS

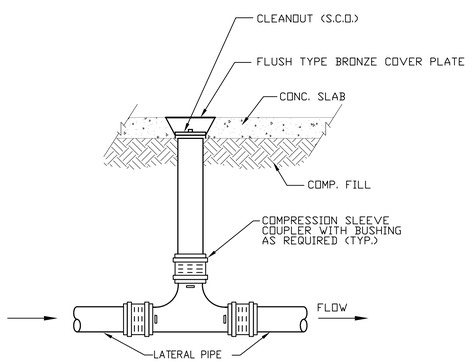

FLOOR CLEANOUT (2-WAY) DETAIL 5

SCALE: NTS

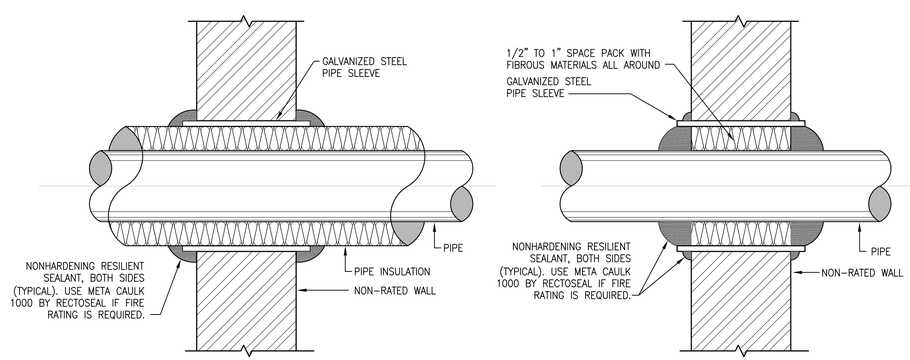

NOTE:

1. INSTALL FIRE STOPPING MATERIAL PER MANUFACTURER'S DETAIL.

TYPICAL PIPE PENETRATION THRU WALL DETAIL 3

SCALE: NTS

GENERAL NOTES:

1. ALL PIPE SUPPORTS SHALL BE BY MANUFACTURER INDICATED IN THE SPECIFICATIONS.
2. SPACE PIPE HANGERS AND SUPPORTS PER MECHANICAL SPECIFICATION SECTION.
3. BRACE ALL PIPING, DUCTWORK AND MECHANICAL EQUIPMENT TRANSVERSELY AND LONGITUDINALLY ACCORDING TO SMACNA GUIDELINES FOR SEISMIC RESTRAINTS OF MECHANICAL SYSTEM AND PIPING SYSTEM.
4. REFER TO PIPE HANGER, TRAPEZE AND SEISMIC SUPPORT DETAILS FOR APPLICABLE CONTINUATION.
5. PIPE HANGERS AND SUPPORTS SHALL COMPLY WITH MSS SP-58 – PIPE HANGERS AND SUPPORTS – MATERIALS, DESIGN, MANUFACTURE, SELECTION, APPLICATION, AND INSTALLATION; MANUFACTURERS' STANDARDIZATION SOCIETY OF THE VALVE AND FITTINGS INDUSTRY, INC.; 2009.
6. EXPANSION ANCHORS SHALL COMPLY WITH ICC-ES AC01 – ACCEPTANCE CRITERIA FOR EXPANSION ANCHORS IN MASONRY ELEMENTS; 2009.
7. REFER TO SPECIFICATIONS FOR ADDITIONAL INFORMATION.

KEY NOTES:

1. ALL PIPE SUPPORTS SHALL BE PIPING TECHNOLOGY & PRODUCTS, INC. OR EQUAL.
2. INSTALL ROD STIFFENER WHEN LENGTH EXCEEDS THE SCHEDULE LENGTH:

MAX. PIPE SIZE, IN.	ROD SIZE, IN.	MAX. ROD LENGTH, IN.
1/2 UP TO 2	3/8	25
3	1/2	25

3. PROVIDE NONMETALLIC SEPARATION BETWEEN UNINSULATED COPPER PIPING AND METAL SUPPORTS. PLASTIC COATED OR FELT LINED CLEVIS HANGER. PLASTIC COATED PIPE CLAMP.
4. REFER TO TYPICAL PIPE SUPPORT AND SEISMIC ATTACHMENTS DETAIL 3 AND 4 FOR APPLICABLE CONTINUATION.
5. SPACE PIPE HANGERS AND SUPPORTS PER MECHANICAL SPECIFICATION.
6. PROVIDE TRANSVERSE SEISMIC BRACING AT 20'-0" MAX. AND EVERY CHANGE OF DIRECTION.
7. PROVIDE LONGITUDINAL SEISMIC BRACING AT 40'-0" O.C. MAX., MINIMUM OF 2 REQUIRED.
8. BRACE ALL PIPING, DUCTWORK AND MECHANICAL EQUIPMENT TRANSVERSELY AND LONGITUDINALLY ACCORDING TO SMACNA GUIDELINES FOR SEISMIC RESTRAINTS OF MECHANICAL SYSTEM AND PIPING SYSTEM.
9. REFER TO PIPING TECHNOLOGY & PRODUCTS INC. FOR CHANNEL TYPE AND LOAD RATING BASED ON BEAM SPAN FOR UNIFORM AND CONCENTRATED LOADING.
10. REFER TO PIPE HANGER, TRAPEZE AND SEISMIC SUPPORT DETAILS FOR APPLICABLE CONTINUATION.

PLUMBING DETAIL NOTES FOR DETAILS 2 1

SCALE: NTS

Project Title:

City of Cupertino - McClellan Ranch Preserve
Environmental Education Center
Re-Bid

Design Firm:
SIEGEL & STRAIN Architects
1295 59th Street
Emeryville, CA 94608
510 / 547-8092
FAX 510 / 547-2604
info@siegelstrain.com

Consultant:
INTEGRAL GROUP
427 13th Street
Oakland, CA 94612
510 663-2070
510 663-2080 fax
www.integralgroup.com

Stamp:
REGISTERED PROFESSIONAL ENGINEER
TYLER BRADSHAW
No. M 33496
Exp. 6-30-14
MECHANICAL
STATE OF CALIFORNIA

No.	Description	Date

Issue Note:
CONSTRUCTION DOCUMENTS
01/10/2014

Project ID:	11-020
File Name:	
Drawn by:	NC
Checked by:	SA
Plot Date:	01/08/2014
Scale:	1/8" = 1'-0"

Sheet Title:
PLUMBING DETAILS

Sheet No.:
P6.1

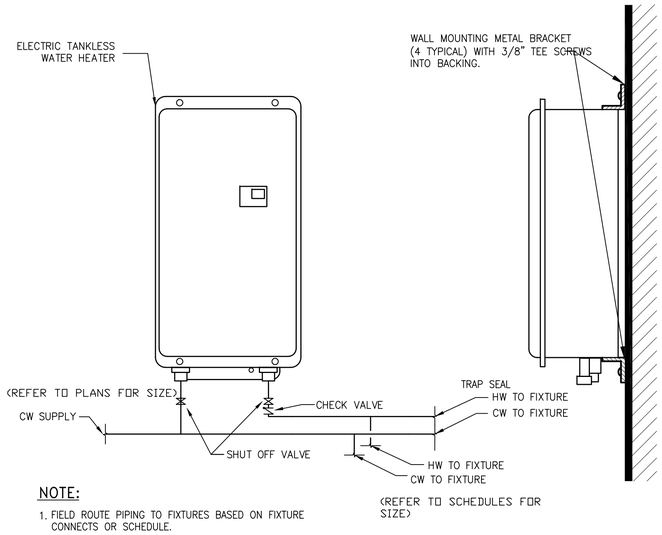

NOTE:

1. FIELD ROUTE PIPING TO FIXTURES BASED ON FIXTURE CONNECTS OR SCHEDULE.

WATER HEATER WALL MOUNTING DETAIL (6)

SCALE: NTS

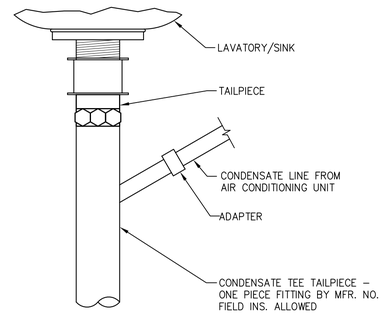

SINK CONDENSATE CONNECTION (4)

SCALE: NTS

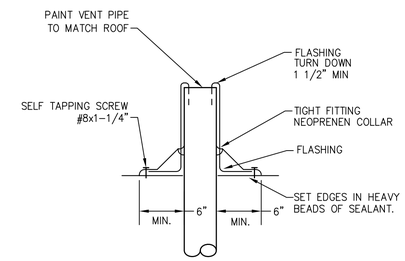

SANITARY WASTE VENT

VENT THRU ROOF (2)

SCALE: NTS

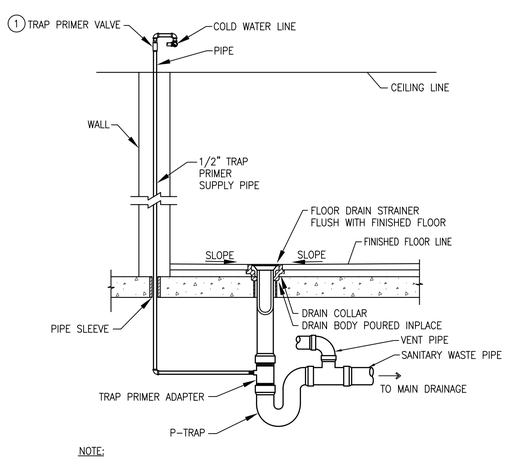

NOTE:

1 TRAP PRIMER VALVE SHALL BE MIFAB MR-500

TYPICAL FLOOR DRAIN W/TRAP PRIMER & VENT (5)

SCALE: NTS

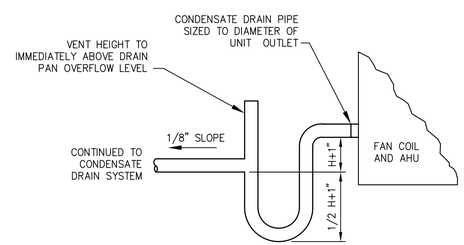

AIR-CONDITIONING CONDENSATE DRAINS	
TONS OF REFRIGERATION	MIN. CONDENSATE PIPE DIAMETER (INCHES)
0–3	3/4"
3.5–20	1"
20–90	1–1/4"
90–125	1–1/2"
125–250	2"

NOTES:

1) H' IS EQUAL TO THE STATIC PRESSURE OF THE A/C UNIT. THE MIN. VALUE FOR 'H' SHALL BE 3".
2) ALL CONDENSATE DRAIN PIPING MATERIAL ON ROOF AND/OR EXPOSED TO SUN LIGHT TO BE COPPER.

CONDENSATE DRAIN (3)

SCALE: NTS

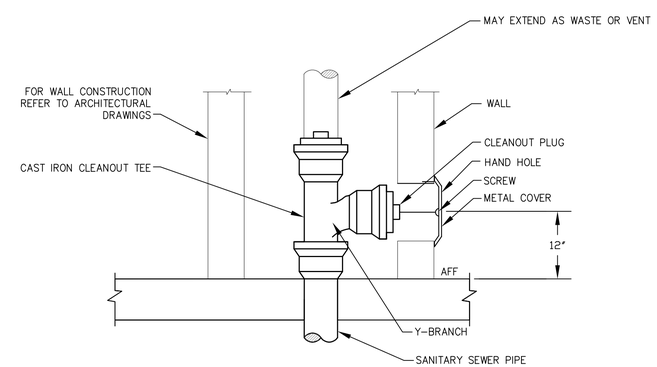

TYPICAL WALL CLEANOUT DETAIL (1)

SCALE: NTS

Project Title:

City of Cupertino - McClellan Ranch Preserve
Environmental Education Center
Re-Bid

Design Firm:

SIEGEL & STRAIN Architects
1295 59th Street
Emeryville, CA 94608
510 / 547-8092
FAX 510 / 547-2604
info@siegelstrain.com

Consultant:

INTEGRAL GROUP
427 13th Street
Oakland, CA 94612
510 663-2070
510 663-2080 fax
www.integralgroup.com

Stamp:

REGISTERED PROFESSIONAL ENGINEER
TYLER BRADSHAW
No. M 33496
Exp. 6-30-14
MECHANICAL
STATE OF CALIFORNIA

No.	Description	Date

Issue Note:

CONSTRUCTION DOCUMENTS
01/10/2014

Project ID:	11-020
File Name:	
Drawn by:	NC
Checked by:	SA
Plot Date:	01/08/2014
Scale:	1/8" = 1'-0"

Sheet Title:

PLUMBING DETAILS

Sheet No.:

P6.2

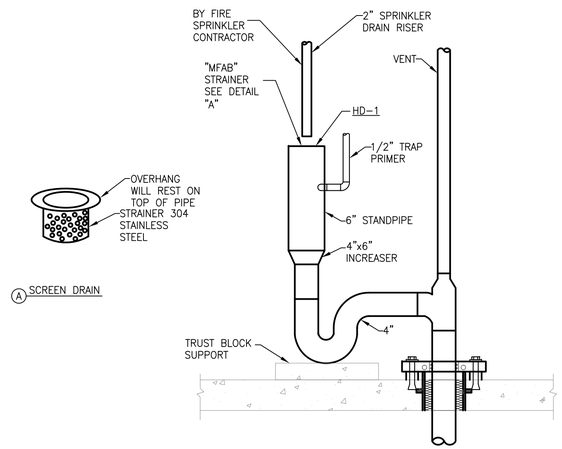

HUB DRAIN DETAIL 4

SCALE: NTS

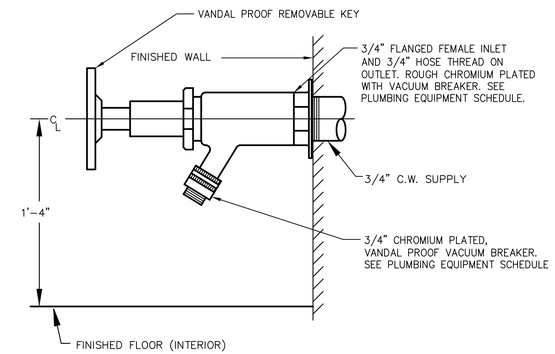

INTERIOR HOSE BIBB DETAIL – HB-2 2

SCALE: NTS

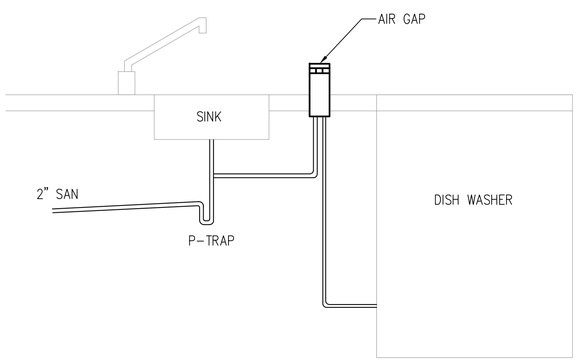

DISHWASHER WASTE TO SINK DRAIN 5

SCALE: NTS

1. 4" FROM PRIVATE FIRE SERVICE MAIN. SEE PLAN AND CIVIL DRAWINGS FOR CONTINUATION AND DETAILS.
2. CONCRETE THRUST BLOCK.
3. 2-INCH ANNULAR CLEARANCE AND NON-HARDENING WEATHERPROOF MASTIC
4. 4" FW TO SPRINKLER RISER AND DISTRIBUTION

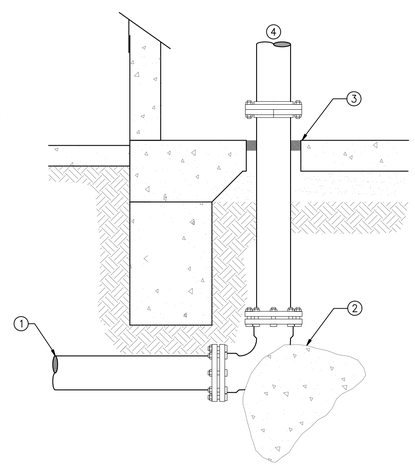

FIRE SPRINKLER RISER DETAIL 3

SCALE: NTS

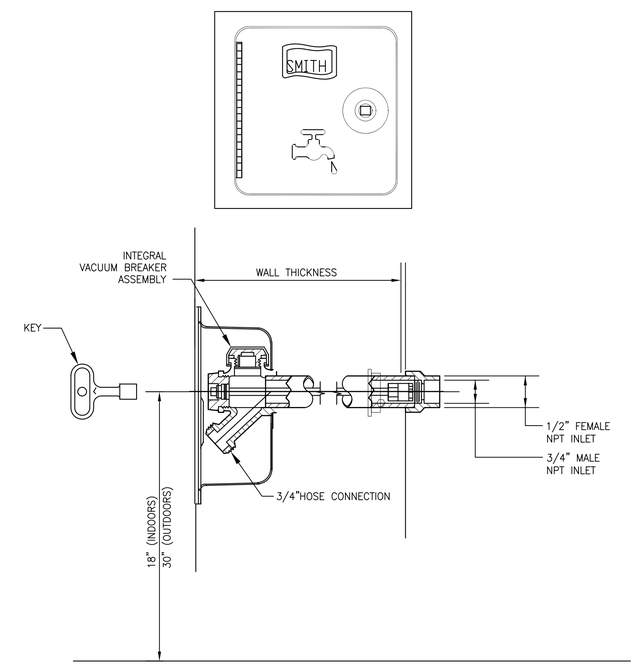

EXTERIOR HOSE BIBB DETAIL – HB-1 1

SCALE: NTS

Project Title:

City of Cupertino - McClellan Ranch Preserve
Environmental Education Center
Re-Bid

Design Firm:

SIEGEL & STRAIN Architects
1295 59th Street
Emeryville, CA 94608
510 / 547-8092
FAX 510 / 547-2604
info@siegelstrain.com

Consultant:

INTEGRAL GROUP
427 13th Street
Oakland, CA 94612
510 663-2070
510 663-2080 fax
www.integralgroup.com

Stamp:

REGISTERED PROFESSIONAL ENGINEER
TYLER BRADSHAW
No. M 33496
Exp. 6-30-14
MECHANICAL
STATE OF CALIFORNIA

No.	Description	Date

Issue Note:

CONSTRUCTION DOCUMENTS
01/10/2014

Project ID:	11-020
File Name:	
Drawn by:	NC
Checked by:	SA
Plot Date:	01/08/2014
Scale:	1/8" = 1'-0"

Sheet Title:

PLUMBING DETAILS

Sheet No.:

P6.3

DRAWING INDEX

E0-0.0	GENERAL INFORMATION
E0-0.1	GENERAL INFORMATION
E0-1.0	SITE PLAN
E0-5.0	SCHEDULES
E0-5.1	SCHEDULES
E0-6.0	DIAGRAMS
E0-6.1	DIAGRAMS
E0-7.0	DETAILS
E0-7.1	DETAILS
E0-7.2	DETAILS
E0-8.0	TITLE 24
E0-8.1	TITLE 24
E0-8.2	EXTERIOR TITLE 24
E0-8.3	EXTERIOR TITLE 24
E1-2.0	ENVIRONMENTAL EDUCATION CENTER - POWER FLOOR PLANS
E1-2.1	ENVIRONMENTAL EDUCATION CENTER - POWER FLOOR PLANS
E1-3.0	ENVIRONMENTAL EDUCATION CENTER - LIGHTING FLOOR PLANS
E3-2.0	BLACKSMITH SHOP - POWER FLOOR PLANS
E3-3.0	BLACKSMITH SHOP - LIGHTING FLOOR PLANS

ABBREVIATIONS

A	AMPERE	JB	JUNCTION BOX
ABV	ABOVE	KAIC	KILOAMPERE INTERRUPTING CAPACITY
AF	AMPERE FRAME, AMPERE FUSE	KV	KILOVOLT
AFF	ABOVE FINISHED FLOOR	KVA	KILOVOLT AMPERE
AIC	AMPERE INTERRUPTING CAPACITY	KW	KILOWATT
ARCH AS	ARCHITECTURAL AMPERE SWITCH	LTG	LIGHTING
AT	AMPERE TRIP	LV	LOW VOLTAGE
ATS	AUTOMATIC TRANSFER SWITCH	MAX	MAXIMUM
BKR	BREAKER	KCMIL	THOUSAND CIRCULAR MILS
BLDG	BUILDING	MDF	MAIN DISTRIBUTION FRAME
C	CONDUIT	MECH	MECHANICAL
CATV	CABLE TELEVISION	MH	MANHOLE
CB	CIRCUIT BREAKER	MIN	MINIMUM
CBC	CALIFORNIA BUILDING CODE	MTD	MOUNTED
CD	CANDELA	MTG	MOUNTING
CEC	CALIFORNIA ELECTRICAL CODE	NC	NORMALLY CLOSED
CFC	CALIFORNIA FIRE CODE	NFPA	NATIONAL FIRE PROTECTION ASSOCIATION
CKT	CIRCUIT	NIC	NOT IN CONTRACT
CL	CENTER LINE	NIEC	NOT IN ELECTRICAL CONTRACT NUMBER,
CLG	CEILING	NO	NORMALLY OPEN
CO	CONDUIT ONLY	NTS	NOT TO SCALE
COMM	COMMUNICATIONS	OC	ON CENTER
CSFM	CALIFORNIA STATE FIRE MARSHALL	P	POLE
CTR	CENTER	PA	PUBLIC ADDRESS
(D)	DEMOLISH	PB	PULL BOX
DET	DETAIL	PF	POWER FACTOR
DIM	DIMENSION	PH	PHASE
DIST	DISTRIBUTION	PNL	PANEL
DP	DISTRIBUTION PANEL	PVC	POLYVINYL CHLORIDE
DWG	DRAWING	(R)	EXISTING TO BE RELOCATED
(E)	EXISTING	REQD	REQUIRED
ELEC	ELECTRICAL	REQT(S)	REQUIREMENT(S)
EM	EMERGENCY	RM	ROOM
EMT	ELECTRICAL METALLIC TUBING	RSC	RIGID STEEL CONDUIT
EOL	END OF LINE RESISTOR	SHT	SHEET
EQP	EQUIPMENT	STC	SIGNAL TERMINAL CABINET
FA	FIRE ALARM	SW	SWITCH
FACP	FIRE ALARM CONTROL PANEL	SWBD	SWITCHBOARD
(F) FIN	FUTURE FINISH	TC	TERMINAL CABINET
FL	FLOOR	TEL	TELEPHONE
G, GND	GROUND	TYP	TYPICAL
HGT	HEIGHT	UON	UNLESS OTHERWISE NOTED
HP	HORSEPOWER	V	VOLT
IC	INTERCOM	W	WATT, WIRE
IDF	INTERMEDIATE DISTRIBUTION FRAME	WP	WEATHERPROOF
IMC	INTERMEDIATE METAL CONDUIT	XFMR	TRANSFORMER

CALIFORNIA CODES AND STANDARDS

1. 2010 CALIFORNIA BUILDING CODE (CBC), VOLUMES #1 AND #2 (PART 2,TITLE 24, CCR)
2. 2010 CALIFORNIA ELECTRICAL CODE (PART 3, TITLE 24, CCR).
3. 2010 CALIFORNIA MECHANICAL CODE (CMC) (PART 4, TITLE 24, CCR).
4. 2010 CALIFORNIA PLUMBING CODE (CPC) (PART 5, TITLE 24, CCR).
5. 2010 CALIFORNIA ENERGY CODE (PART 6,TITLE 24, CCR).
6. 2010 CALIFORNIA FIRE CODE (CFC) (PART 9,TITLE 24, PART 9.
7. 2010 CALIFORNIA GREEN CODE (PART 11, TITLE 24, CCR).
8. 2010 CALIFORNIA REFERENCED STANDARDS CODE (PART 12, TITLE 24, CCR).
9. 2010 NFPA 13 STANDARDS FOR FIRE SPRINKLER SYSTEMS.
10. 2010 NFPA 72 NATIONAL FIRE ALARM CODE.
11. ADA STANDARDS FOR ACCESSIBLE DESIGN: ADA ACCESSIBILITY GUIDELINES (ADAAG) 28, PART 36 APPENDIX A.
12. ADA STANDARDS FOR ACCESSIBLE DESIGN - CODE OF REGULATIONS (INCLUDING AMENDMENTS)
13. DSA IR 16-8. SOLAR PHOTOVOLTAIC & THERMAL SYSTEMS ACCEPTANCE REQUIREMENTS
14. SFM SOLAR PHOTOVOLTAIC INSTALLATION GUIDELINE

GENERAL NOTES

A. THE CONTRACTOR SHALL VISIT THE PROJECT SITE PRIOR TO BIDDING AND ALLOW FOR ALL FIELD CONDITIONS. OBTAIN CONTRACT DOCUMENTS FOR ALL OTHER TRADES AND BE RESPONSIBLE FOR ALL ELECTRICAL WORK NOTED AND CALLED OUT ON THE CONTRACT DOCUMENTS. COORDINATE ELECTRICAL WORK WITH ALL OTHER TRADES ON PROJECT. COORDINATE ALL CONDUIT RUNS, ELECTRICAL EQUIPMENT AND PANEL LOCATIONS WITH ALL OTHER WORK TO AVOID CONFLICTS.

B. COMPLY WITH ALL APPLICABLE CODES AND REGULATIONS. MATERIALS AND EQUIPMENT SHALL BE U.L. AND CALIFORNIA STATE FIRE MARSHAL (CSFM) LISTED AND LABELED FOR THE APPLICATION.

C. BEFORE BEGINNING CONSTRUCTION, PROVIDE TO THE ARCHITECT A CONSTRUCTION SCHEDULE OF ELECTRICAL WORK. THE CONSTRUCTION SCHEDULE SHALL IDENTIFY ALL SIGNIFICANT MILESTONES WITH COMPLETION DATES.

D. OBTAIN AND PAY FOR ALL PERMITS, LICENSES AND INSPECTION FEES REQUIRED BY THIS CONTRACT WORK, UNLESS OTHERWISE NOTED.

E. THE CONTRACTOR SHALL BE RESPONSIBLE FOR THE SAFETY OF PERSONS AND PROPERTY AND SHALL PROVIDE INSURANCE COVERAGE AS NECESSARY FOR LIABILITY, PERSONAL, PROPERTY DAMAGE, TO FULLY PROTECT THE CITY, ARCHITECT AND ENGINEER FROM ANY AND ALL CLAIMS RESULTING FROM THIS WORK.

F. MAINTAIN RECORD DRAWINGS AT THE PROJECT SITE INDICATING ALL MODIFICATIONS TO ELECTRICAL SYSTEMS. AT THE CONCLUSION OF THE PROJECT, PROVIDE ACCURATE "AS-BUILT" DRAWINGS ACCEPTABLE TO THE CITY.

G. ALL MATERIALS PROVIDED FOR THE PROJECT SHALL BE NEW, UNLESS OTHERWISE NOTED. PROVIDE ALL INCIDENTAL MATERIALS REQUIRED FOR A COMPLETE INSTALLATION.

H. PROVIDE ALL REQUIRED "CUTTING, PATCHING, BACK FILL AND REPAIRS" NECESSARY TO RESTORE DAMAGED SURFACES TO EQUAL OR BETTER THAN ORIGINAL CONDITIONS EXISTING AT START OF WORK.

I. ALL ELECTRICAL EQUIPMENT INSTALLED OUTDOORS SHALL BE WEATHERPROOF. EXTERIOR CONDUIT RUNS INTO BUILDINGS SHALL BE INSTALLED WITH FLASHING, CAULKED AND SEALED. CONDUITS FOR EXTERIOR ELECTRICAL DEVICES SHALL BE RUN INSIDE BUILDING, UNLESS OTHERWISE NOTED. UNDERGROUND AND EXTERIOR CONDUIT SHALL HAVE WATERTIGHT FITTINGS.

J. ALL CONDUITS SHALL BE A MINIMUM 3/4," UNLESS OTHERWISE NOTED. POWER AND LIGHTING BRANCH CIRCUITS SHALL HAVE A MINIMUM TWO (2) #12 AWG AND ONE (1) #12 AWG GROUND TYPE THWN/THHN. ALL POWER WIRING SHALL BE RUN IN CONDUIT. THE USE OF ROMEX (NMC) OR BX (AC) CABLE IS NOT PERMITTED. PROVIDE ALL WIRES AND WIRE SIZES REQUIRED BY LATEST CODES.

K. CONDUITS SHALL NOT BE USED AS A GROUND PATH. ALL CONDUITS SHALL CONTAIN A GROUNDING CONDUCTOR, SIZED PER NEC/CEC REQUIREMENTS.

L. THERE SHALL BE NO ROOF PENETRATIONS WITHIN 5'-0" OF FIRE RATED OR AREA SEPARATION WALLS. VERIFY EXACT LOCATIONS OF THESE WALLS WITH ARCHITECTURAL DRAWINGS.

M. NOTE THAT BRANCH CIRCUIT WIRING IS NOT SHOWN. CIRCUIT NUMBERS ARE SHOWN ADJACENT TO ALL OUTLETS/FIXTURES/DEVICES. PROVIDE ALL BRANCH CIRCUIT WIRING BASED ON CIRCUIT NUMBERS SHOWN TO COMPLETE THE WIRING SYSTEM.

N. THE CONTRACTOR SHALL, PRIOR TO BID, FIELD VERIFY ALL REQUIREMENTS FOR MODIFYING THE EXISTING CATV, DATA, TELEPHONE, CLOCK AND INTERCOM SYSTEMS TO ACCOMMODATE ADDITIONS NOTED. PROVIDE ALL MATERIALS NEEDED TO MAKE A FULLY OPERATIONAL SYSTEM AT THE CONCLUSION OF PROJECT WORK.

O. INCLUDE UTILITY COMPANY'S "CONTRACT-DOCUMENTS" WITH THE BID. REMAIN IN CONTACT WITH THE UTILITY COMPANY'S ENGINEERING DEPARTMENT THROUGHOUT THE PROJECT TO INSURE COORDINATION AND SCHEDULING OF WORK.

P. PROVIDE A PULL CORD IN EVERY EMPTY CONDUIT FOR USE IN FUTURE CONSTRUCTION.

Q. VERIFY ALL VOLTAGES OF MECHANICAL EQUIPMENT WITH MECHANICAL CONTRACTOR PRIOR TO ROUGH-IN.

R. THE CONTRACTOR SHALL BE RESPONSIBLE FOR SITE LOCATING ALL EXISTING UNDERGROUND SYSTEMS IN THE AREA OF UNDER GROUND WORK. REPAIR ALL DAMAGED SYSTEMS TO OWNERS SATISFACTION. MAINTAIN EXTREME CARE DURING TRENCHING AS EXISTING SYSTEMS ARE KNOWN TO EXIST IN THE AREA. THE DRAWINGS AND SPECIFICATIONS ARE FOR THE ASSISTANCE AND GUIDANCE OF THE CONTRACTOR. EXACT LOCATIONS, DISTANCES AND ELEVATIONS WILL BE GOVERNED BY ACTUAL CONDITIONS. COORDINATE THE CONTRACT DOCUMENTS AND FIELD CONDITIONS TO DETERMINE EXACT ROUTING AND FINAL TERMINATIONS FOR ALL WORK.

S. CONDUIT AND WIRING ARE SHOWN ON THESE PLANS DIAGRAMMATICALLY. EXACT LOCATIONS SHALL BE DETERMINED IN THE FIELD TO SUIT SITE CONDITIONS.

T. SEISMIC ANCHORAGE OF ALL ELECTRICAL EQUIPMENT SHALL BE PROVIDED IN ACCORDANCE WITH TITLE 24, CBC SECTION 1632A.

U. SUFFICIENT ACCESS AND WORKING SPACE SHALL BE PROVIDED AND MAINTAINED ABOUT ALL ELECTRIC EQUIPMENT TO PERMIT READY AND SAFE ORPERATION AND MAINTENANCE OF SUCH EQUIPMENT PER CEC ARTICLE 110-26.

Project Title:

City of Cupertino - McClellan Ranch Preserve
Environmental Education Center
Re-Bid

Design Firm:

SIEGEL & STRAIN Architects
1295 59th Street
Emeryville, CA 94608
510 / 547-8092
FAX 510 / 547-2604
info@siegelstrain.com

Consultant:

INTEGRAL GROUP
1084 Foxworthy Avenue
Suite 150
San Jose, CA 95118
408 448-6300
408 448-6301 fax
www.integralgroup.com

Stamp:

No.	Description	Date

Issue Note:

CONSTRUCTION DOCUMENTS 100%
01/10/2014

Project ID:	11-020
File Name:	JSWB-A-00.rvt
Drawn by:	Ben Buschmann
Checked by:	David Maino
Plot Date:	01/08/2014
Scale:	

Sheet Title:

GENERAL INFORMATION NOTES

Sheet No.:

E0-0.0

SYMBOL LIST

GENERAL SYMBOLS

- 3 / E2.1 — PLAN OR DETAIL DESIGNATION "3" DENOTES DETAIL OR PLAN NUMBER; "E2.1" DENOTES SHEET NUMBER. BLANK DENOTES SAME SHEET.
- 2 / E1.0 — SECTION OR ELEVATION DESIGNATION "2" DENOTES SECTION OR ELEVATION NUMBER; "E1.0" DENOTES SHEET NUMBER. BLANK DENOTES SAME SHEET.
- 3 — SHEET NOTE TAG - SEE ASSOCIATED NOTE ON SAME SHEET.
- 11 — FEEDER, CONDUIT OR RELAY SCHEDULE TAG

LUMINAIRE & SWITCH SYMBOLS

- LUMINAIRE - SEE SCHEDULE.
- LUMINAIRE - SEE SCHEDULE.
- LUMINAIRE - SEE SCHEDULE.
- LUMINAIRE - SEE SCHEDULE.
- LUMINAIRE - POLE MOUNTED SINGLE HEAD. SEE SCHEDULE.
- LUMINAIRE - POLE MOUNTED DOUBLE HEAD. SEE SCHEDULE.
- LUMINAIRE - SINGLE WALL WASHER. SEE SCHEDULE.
- LUMINAIRE - DOUBLE WALL WASHER. SEE SCHEDULE.
- LUMINAIRE - CORNER WALL WASHER. SEE SCHEDULE.
- LUMINAIRE - SEE SCHEDULE.
- LUMINAIRE - WALL MOUNTED. SEE SCHEDULE.
- LUMINAIRE - WALL MOUNTED. SEE SCHEDULE.
- EMERGENCY LUMINAIRE - SEE SCHEDULE.
- EMERGENCY LUMINAIRE - SEE SCHEDULE.
- EMERGENCY LUMINAIRE - SEE SCHEDULE.
- EMERGENCY LUMINAIRE - SEE SCHEDULE.
- EMERGENCY LUMINAIRE - SEE SCHEDULE.
- EMERGENCY LUMINAIRE - WALL MOUNTED. SEE SCHEDULE.
- EMERGENCY LUMINAIRE - WALL MOUNTED. SEE SCHEDULE.
- EXIT LIGHT - SEE SCHEDULE.
- EXIT LIGHT (WITH ARROW) - SEE SCHEDULE.
- EXIT LIGHT (DOUBLE FACED WITH ARROW) - SEE SCHEDULE.
- EMERGENCY BATTERY PACK EXIT LIGHT - SEE SCHEDULE.
- $ — SINGLE POLE SWITCH - WALL MOUNTED AT + 48" AFF UON.
- M — OCCUPANCY SENSOR - CEILING MOUNTED
- M — OCCUPANCY SENSOR - WALL MOUNTED
- P — PHOTOSENSOR
- LCD — DAYLIGHT CONTROL PANEL
- LCP — LIGHTING CONTROL PANEL
- TS — TIME SWITCH
- RC — ROOM CONTROLLER

TYPICAL LUMINAIRE & SWITCH NOMENCLATURE

A — "A" DENOTES FIXTURE TYPE

L1-3b — "L1" DENOTES PANEL NAME
"3" DENOTES CIRCUIT NUMBER
"b" DENOTES SWITCHING

$x — LOWER CASE LETTER = SWITCH LEG
D = DIMMER SWITCH. SEE SPECIFICATIONS
K = KEY OPERATED SWITCH
L = LOW VOLTAGE SWITCH
M = MOMENTARY CONTACT SWITCH
TS = DIGITAL WALL TIMER
S = OCCUPANCY SENSOR SWITCH
3 = 3 WAY SWITCH
4 = 4 WAY SWITCH

Mx — D = DUAL TECHNOLOGY
P = PASSIVE INFRARED

POWER DISTRIBUTION SYMBOLS (PLANS)

- J — JUNCTION BOX - CEILING OR WALL MOUNTED, SIZE TO CODE, TAPE AND TAG WIRES. PROVIDE FLEX AND/OR RECEPTACLE AS REQUIRED TO CONNECT EQUIPMENT.
- PANELBOARD - FLUSH MOUNTED.
- PANELBOARD - SURFACE MOUNTED.
- DISTRIBUTION PANEL
- SWITCHBOARD
- MOTOR
- UNFUSED DISCONNECT SWITCH
- FUSED DISCONNECT SWITCH
- COMBINATION MAGNETIC STARTER/FUSED DISCONNECT SWITCH
- MAGNETIC STARTER - NEMA SIZE INDICATED.
- MOTOR RATED SWITCH
- T — TRANSFORMER
- GROUND ROD
- G — EMERGENCY GENERATOR
- CH 2 — EQUIPMENT TAG

POWER DISTRIBUTION SYMBOLS (SINGLE LINE)

- CIRCUIT BREAKER - DRAW-OUT.
- CIRCUIT BREAKER
- FUSED SWITCH
- M — METER WITH CURRENT TRANSFORMER
- TRANSFORMER
- AUXILIARY CONTACT - NORMALLY OPENED.
- AUXILIARY CONTACT - NORMALLY CLOSED.
- AUTOMATIC TRANSFER SWITCH
- EMERGENCY GENERATOR
- GROUND ROD

WIRING & CONDUIT RUN SYMBOLS

- CONDUIT - CONCEALED IN WALLS OR CEILING.
- CONDUIT - EXPOSED.
- CONDUIT - DIRECT BURIAL.
- CONDUIT - HOME RUN TO PANEL, TERMINAL CABINET, ETC. SIZE CONDUIT ACCORDING TO SPECIFICATIONS AND APPLICABLE CODES. ALL 20A, 1P BRANCH CIRCUITS SHALL BE #12 AWG WIRES WITH #12 AWG NEUTRALS AND GROUNDS. RUN A MAXIMUM OF 3 BRANCH CIRCUITS PER CONDUIT.
- CONDUIT - FLEX WITH CONNECTION.
- CONDUIT - STUB UP.
- CONDUIT - STUB DOWN.
- E — CONDUIT - EMERGENCY POWER SYSTEM.
- CONDUIT - CAPPED.
- CONDUIT - CONTINUATION.

SECURITY SYMBOLS

- A — ALARM CONTACT
- CR — CARD READER
- ES — ELECTRIC DOOR STRIKE
- GB — GLASSBREAK DETECTOR
- KP — KEYPAD
- REX — REQUEST TO EXIT DEVICE
- SAP — SECURITY ALARM PANEL
- FIXED POSITION VIDEO CAMERA
- PAN, TILT, ZOOM (PTZ) VIDEO CAMERA

FIRE ALARM SYMBOLS

- F — MANUAL PULL STATION
- F — STROBE
- F — HORN/STROBE
- F — HORN
- WP F — HORN - WEATHER PROOF, VANDAL RESISTANT
- F — BELL
- H — HEAT DETECTOR
- H C — HEAT DETECTOR - ABOVE CEILING
- H F — HEAT DETECTOR - BELOW FLOOR
- S — SMOKE DETECTOR
- S C — SMOKE DETECTOR - ABOVE CEILING
- S F — SMOKE DETECTOR - BELOW FLOOR
- S D — SMOKE DETECTOR - DUCT
- F — BEAM DETECTOR - RECEIVER
- F — BEAM DETECTOR - TRANSMITTER
- FACP — FIRE ALARM CONTROL PANEL
- RNPS — REMOTE NOTIFICATION POWER SUPPLY
- FATC — FIRE ALARM TERMINAL CABINET
- EOL — END OF LINE RESISTOR
- RA — REMOTE ANNUNCIATOR
- SD — SMOKE DAMPER
- MD — MAGNETIC DOOR HOLDER
- AM — ADDRESSABLE MODULE
- RM — RELAY MODULE
- WFS — WATER FLOW SWITCH
- PIV — POST INDICATOR VALVE
- VTS — VALVE TAMPER SWITCH

TYPICAL ZONE NOMENCLATURE

75 F N2-4 — "N2" DENOTES NOTIFICATION CIRCUIT
"4" DENOTES DEVICE NUMBER
"75" DENOTES CANDELA RATING OF STROBE

H D1-5 — "D1" DENOTES DETECTION ZONE
"5" DENOTES DEVICE NUMBER

NEW VS. EXISTING

- (N) CONDUIT - CONCEALED IN WALLS OR CEILING.
- (E) CONDUIT - CONCEALED IN WALLS OR CEILING.
- (E) CONDUIT - TO BE REMOVED.
- (N) FUSED DISCONNECT SWITCH
- (E) FUSED DISCONNECT SWITCH
- (E) FUSED DISCONNECT SWITCH - TO BE REMOVED.
- (N) LUMINAIRE - SEE SCHEDULE.
- (E) LUMINAIRE - SEE SCHEDULE.
- (E) LUMINAIRE - TO BE REMOVED.
- F — (N) MANUAL PULL STATION
- F — (E) MANUAL PULL STATION
- F — (E) MANUAL PULL STATION - TO BE REMOVED.
  U = ULTRASONIC

RECEPTACLE SYMBOLS

- SINGLE RECEPTACLE - INSTALL AT + 18" AFF UON. DESIGNATION AS NOTED.
- DUPLEX RECEPTACLE - INSTALL AT + 18" AFF UON.
- GFCI DUPLEX RECEPTACLE - INSTALL AT + 18" AFF UON.
- DOUBLE DUPLEX RECEPTACLE - INSTALL AT + 18" AFF UON.
- DUPLEX RECEPTACLE - INSTALL AT + 1" ABOVE COUNTER TOP BACK SPLASH TO BOTTOM OF RECEPTACLE FACEPLATE UON.
- GFCI DUPLEX RECEPTACLE - INSTALL AT + 1" ABOVE COUNTER TOP BACK SPLASH TO BOTTOM OF RECEPTACLE FACEPLATE UON.
- FLUSH FLOOR BOX WITH SINGLE RECEPTACLE, RJ45 DATA OUTLET, AND RJ11 TELEPHONE OUTLET.
- FLUSH FLOOR BOX WITH SINGLE RECEPTACLE.
- SURFACE MOUNTED WIRE RACEWAY - INSTALL AT + 36" AFF UON.

COMMUNICATIONS SYMBOLS

- STC — SIGNAL TERMINAL CABINET - SURFACE MOUNTED.
- COMBINATION RJ11/BLANK TELEPHONE OUTLET - INSTALL AT + 18" AFF UON. PROVIDE 1" CONDUIT TO ABOVE ACCESSIBLE CEILING.
- COMBINATION RJ11/RJ45 TELEPHONE/DATA OUTLET - INSTALL AT + 18" AFF UON. PROVIDE 1" CONDUIT TO ABOVE ACCESSIBLE CEILING.
- COMBINATION RJ45/BLANK DATA OUTLET - INSTALL AT + 18" AFF UON. PROVIDE 1" CONDUIT TO ABOVE ACCESSIBLE CEILING.
- S — SPEAKER - WALL MOUNTED. INSTALL AT + 8'-0" AFF UON.
- S — SPEAKER - CEILING MOUNTED.
- C — CLOCK - WALL MOUNTED. INSTALL AT + 8'-0" AFF UON.
- FLUSH FLOOR BOX WITH MICROPHONE OUTLET
- TV — TELEVISION OUTLET - TYPE "F" BULKHEAD JACK. INSTALL AT + 52" AFF UON. PROVIDE 3/4" CONDUIT TO ABOVE ACCESSIBLE CEILING FOR CATV CABLE.
- WAP — WIRELESS ACCESS POINT

Project Title:

City of Cupertino - McClellan Ranch Preserve
Environmental Education Center
Re-Bid

Design Firm:
SIEGEL & STRAIN Architects
1295 59th Street
Emeryville, CA 94608
510 / 547-8092
FAX 510 / 547-2604
info@siegelstrain.com

Consultant:
INTEGRAL GROUP
1084 Foxworthy Avenue
Suite 150
San Jose, CA 95118
408 448-6300
408 448-6301 fax
www.integralgroup.com

Stamp:

REGISTERED PROFESSIONAL ENGINEER
DAVID K. KANOUSE
E 14002
EXP 12-31-14
ELECTRICAL
STATE OF CALIFORNIA

No.	Description	Date

Issue Note:
CONSTRUCTION DOCUMENTS 100%
01/10/2014

Project ID:	11-020
File Name:	JSWB-A-00.rvt
Drawn by:	Ben Buschmann
Checked by:	David Maino
Plot Date:	01/08/2014
Scale:	

Sheet Title:
GENERAL INFORMATION NOTES

Sheet No.:
E0-0.1

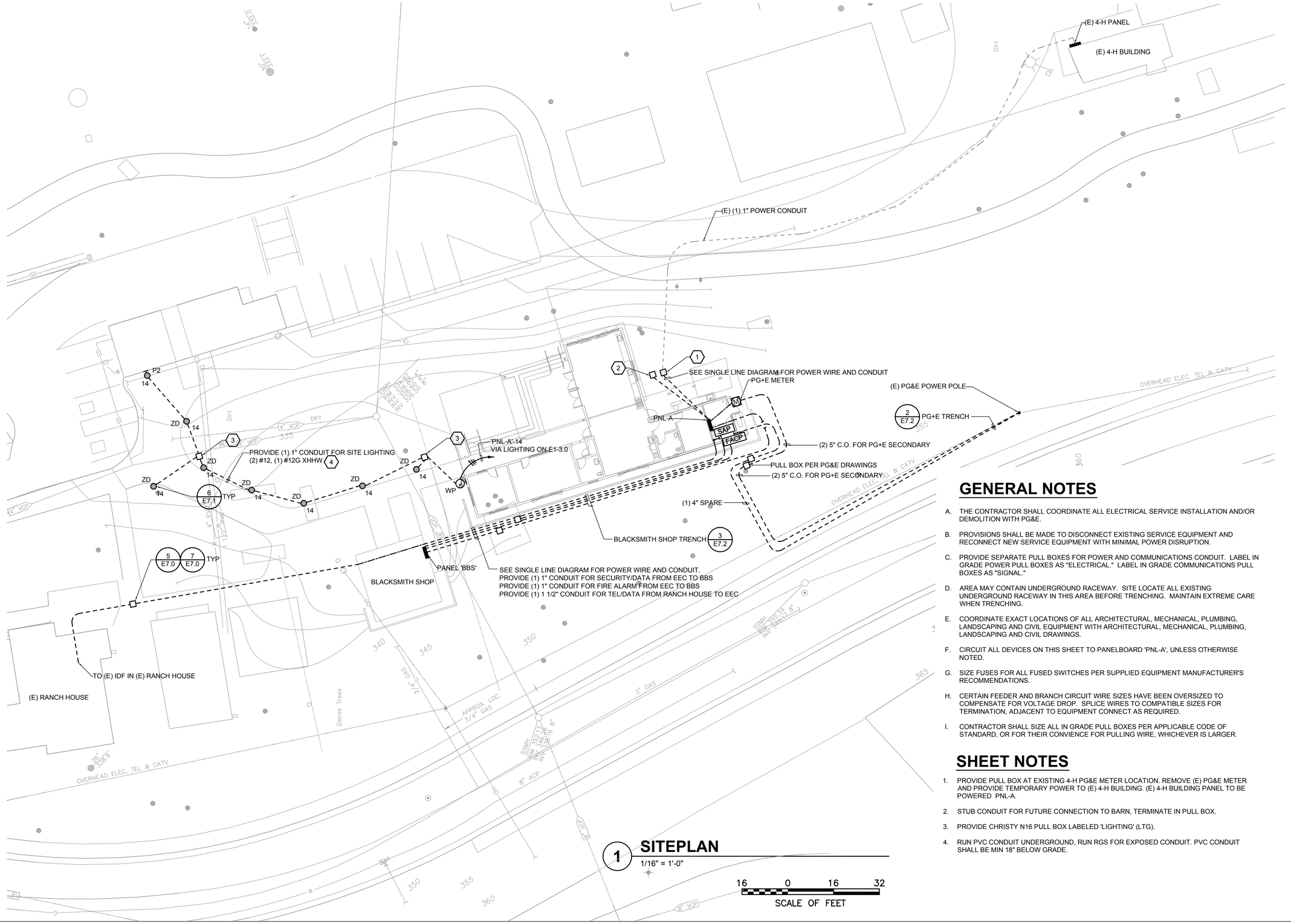

1 **SITEPLAN**

1/16" = 1'-0"

16 0 16 32

SCALE OF FEET

GENERAL NOTES

A. THE CONTRACTOR SHALL COORDINATE ALL ELECTRICAL SERVICE INSTALLATION AND/OR DEMOLITION WITH PG&E.

B. PROVISIONS SHALL BE MADE TO DISCONNECT EXISTING SERVICE EQUIPMENT AND RECONNECT NEW SERVICE EQUIPMENT WITH MINIMAL POWER DISRUPTION.

C. PROVIDE SEPARATE PULL BOXES FOR POWER AND COMMUNICATIONS CONDUIT. LABEL IN GRADE POWER PULL BOXES AS "ELECTRICAL." LABEL IN GRADE COMMUNICATIONS PULL BOXES AS "SIGNAL."

D. AREA MAY CONTAIN UNDERGROUND RACEWAY. SITE LOCATE ALL EXISTING UNDERGROUND RACEWAY IN THIS AREA BEFORE TRENCHING. MAINTAIN EXTREME CARE WHEN TRENCHING.

E. COORDINATE EXACT LOCATIONS OF ALL ARCHITECTURAL, MECHANICAL, PLUMBING, LANDSCAPING AND CIVIL EQUIPMENT WITH ARCHITECTURAL, MECHANICAL, PLUMBING, LANDSCAPING AND CIVIL DRAWINGS.

F. CIRCUIT ALL DEVICES ON THIS SHEET TO PANELBOARD 'PNL-A', UNLESS OTHERWISE NOTED.

G. SIZE FUSES FOR ALL FUSED SWITCHES PER SUPPLIED EQUIPMENT MANUFACTURER'S RECOMMENDATIONS.

H. CERTAIN FEEDER AND BRANCH CIRCUIT WIRE SIZES HAVE BEEN OVERSIZED TO COMPENSATE FOR VOLTAGE DROP. SPLICE WIRES TO COMPATIBLE SIZES FOR TERMINATION, ADJACENT TO EQUIPMENT CONNECT AS REQUIRED.

I. CONTRACTOR SHALL SIZE ALL IN GRADE PULL BOXES PER APPLICABLE CODE OF STANDARD, OR FOR THEIR CONVIENCE FOR PULLING WIRE, WHICHEVER IS LARGER.

SHEET NOTES

1. PROVIDE PULL BOX AT EXISTING 4-H PG&E METER LOCATION. REMOVE (E) PG&E METER AND PROVIDE TEMPORARY POWER TO (E) 4-H BUILDING. (E) 4-H BUILDING PANEL TO BE POWERED PNL-A.
2. STUB CONDUIT FOR FUTURE CONNECTION TO BARN, TERMINATE IN PULL BOX.
3. PROVIDE CHRISTY N16 PULL BOX LABELED 'LIGHTING' (LTG).
4. RUN PVC CONDUIT UNDERGROUND, RUN RGS FOR EXPOSED CONDUIT. PVC CONDUIT SHALL BE MIN 18" BELOW GRADE.

Project Title:

City of Cupertino - McClellan Ranch Preserve
Environmental Education Center
Re-Bid

Design Firm:
SIEGEL & STRAIN Architects
1295 59th Street
Emeryville, CA 94608
510 / 547-8092
FAX 510 / 547-2604
info@siegelstrain.com

Consultant:
INTEGRAL GROUP
1084 Foxworthy Avenue
Suite 150
San Jose, CA 95118
408 448-6300
408 448-6301 fax
www.integralgroup.com

Stamp:

REGISTERED PROFESSIONAL ENGINEER
DAVID K. MAINO
E 14027
EXP 12-31-14
ELECTRICAL
STATE OF CALIFORNIA

No.	Description	Date

Issue Note:
CONSTRUCTION DOCUMENTS 100%
01/10/2014

Project ID:	11-020
File Name:	JSWB-A-00.rvt
Drawn by:	Ben Buschmann
Checked by:	David Maino
Plot Date:	01/08/2014
Scale:	

Sheet Title:
SITE PLAN

Sheet No.:
E0-1.0

PANEL 'PNL-A'

VOLTAGE: 120/240
PHASE: 1
WIRE: 3

400A, 2P :MAIN C/B
400A :BUSSING
SURFACE :MOUNTING
10,000 : AIC RATING

BKR TYPE	LOAD	A	B	BKR	ckt	a b	ckt	BKR	A	B	LOAD	BKR TYPE
MC	RECEPTACLE	1.0		20A-1P	1		2	50A-2P	4.1		RANGE	MC
MC	RECEPTACLE		0.8	20A-1P	3		4			4.1		MC
MC	RECEPTACLE	1.0		20A-1P	5		6	20A-1P	0.6		RECEPTACLE	MC
MC	RECEPTACLE		0.8	20A-1P	7		8	20A-1P		0.6	RECEPTACLE	MC
MC	RECEPTACLE	0.8		20A-1P	9		10	20A-1P	0.4		IDF	MC
MC	RECEPTACLE		1.0	20A-1P	11		12	20A-1P		0.9	LIGHTING - TYPE A1, A1EM	MC
MC	RECEPTACLE	1.0		20A-1P	13		14	20A-1P	0.8		LIGHTING - TYPE B, ZA, ZB, ZC, ZD	MC
MC	RECEPTACLE		0.8	20A-1P	15		16	50A-2P		3.2	HP-1	MC
MC	RECEPTACLE	0.8		20A-1P	17		18		3.2			MC
MC	RECEPTACLE		0.4	20A-1P	19		20	30A-2P		1.6	CU-1	MC
MC	RECEPTACLE	0.6		20A-1P	21		22		1.6			MC
MC	RECEPTACLE		0.6	20A-1P	23		24	40A-2P		0.0	PV INVERTER	MC
MC	RECEPTACLE	0.6		20A-1P	25		26		0.0			MC
MC	FRIDGE		0.7	20A-1P	27		28	100A-2P		5.8	EWH-2	MC
MC	EF-1,EF-2,EF-3, EF-4	0.1		20A-1P	29		30		5.8			MC
MC	FC-1, FC-2, FC-3		0.2	20A-2P	31		32	100A-2P		5.8	EWH-3	MC
MC		0.2			33		34		5.8			MC
MC	EWH-1		9.0	100A-2P	35		36	30A-2P		2.4	EWH-4	MC
MC		9.0			37		38		2.4			MC
MC	SPARE		0.0	20A-1P	39		40	20A-1P		0.0	SPARE	MC
MC	SPARE	0.0		20A-1P	41		42	20A-1P	0.0		SPARE	MC
MC	SPARE		0.0	20A-1P	43		44	20A-1P		0.0	SPARE	MC
MC	SPARE	0.0		20A-1P	45		46	20A-1P	0.0		SPARE	MC
MC	SPARE		0.0	20A-1P	47		48	20A-1P		0.0	SPARE	MC
MC	SPARE	0.0		20A-1P	49		50	20A-1P	0.0		SPARE	MC
MC	SPARE		0.0	20A-1P	51		52	20A-1P		0.0	SPARE	MC
MC	(E) 4-H BUILDING PANEL	2.5		100A-2P	53		54	20A-1P	0.0		SPARE	MC
MC			2.5		55		56	20A-1P		0.0	SPARE	MC
MC	PANEL 'BBS'	1.0		60A-2P	57		58	20A-1P	0.0		SPARE	MC
MC			1.0		59		60	20A-1P		0.0	SPARE	MC
		18.6	17.8						24.6	24.3		

KVA PHASE A: 43.2
KVA PHASE B: 42.1
TOTAL KVA: 85.3

NOTES:

1.00 :DEMAND FACTOR
85.3 :DEMAND KVA
355.4 :TOTAL LOAD AMPERES

BREAKER TYPE
MC = MOLDED CASE BREAKER SS = SOLID STATE BREAKER RC = RMOTE CONTROLLED BREAKER MB = METERED BREAKER

PANEL 'BBS'

VOLTAGE: 120/240
PHASE: 1
WIRE: 3

60A, 2P :MAIN C/B
100A :BUSSING
SURFACE :MOUNTING
10,000 : AIC RATING

BKR TYPE	LOAD	A	B	BKR	ckt	a b	ckt	BKR	A	B	LOAD	BKR TYPE
MC	RECEPTACLE	0.8		20A-1P	1		2	20A-1P	0.3		LIGHTING	MC
MC	RECEPTACLE		0.8	20A-1P	3		4	20A-1P		0.0	SPARE	MC
MC	SPARE	0.0		20A-1P	5		6	20A-1P	0.0		SPARE	MC
MC	SPARE		0.0	20A-1P	7		8	20A-1P		0.0	SPARE	MC
MC	SPARE	0.0		20A-1P	9		10	20A-1P	0.0		SPARE	MC
MC	SPARE		0.0	20A-1P	11		12	20A-1P		0.0	SPARE	MC
MC	SPARE	0.0		20A-1P	13		14	20A-1P	0.0		SPARE	MC
MC	SPARE		0.0	20A-1P	15		16	20A-1P		0.0	SPARE	MC
MC	SPARE	0.0		20A-1P	17		18	20A-1P	0.0		SPARE	MC
MC	SPARE		0.0	20A-1P	19		20	20A-1P		0.0	SPARE	MC
MC	SPARE	0.0		20A-1P	21		22	20A-1P	0.0		SPARE	MC
MC	SPARE		0.0	20A-1P	23		24	20A-1P		0.0	SPARE	MC
MC	SPARE	0.0		20A-1P	25		26	20A-1P	0.0		SPARE	MC
MC	SPARE		0.0	20A-1P	27		28	20A-1P		0.0	SPARE	MC
MC	SPARE	0.0		20A-1P	29		30	20A-1P	0.0		SPARE	MC
		0.8	0.8						0.3	0.0		

KVA PHASE A: 1.1
KVA PHASE B: 0.8
TOTAL KVA: 1.9

NOTES:

1.00 :DEMAND FACTOR
1.9 :DEMAND KVA
7.9 :TOTAL LOAD AMPERES

BREAKER TYPE
MC = MOLDED CASE BREAKER SS = SOLID STATE BREAKER RC = RMOTE CONTROLLED BREAKER MB = METERED BREAKER

LUMINAIRE SCHEDULE

FIXTURE CODE	LAMP WATTS	LAMP TYPE	BALLAST TYPE	VOLTS	DESCRIPTION	MOUNTING	MANUFACTURER	REMARKS
A1	2x32	F32T8/ TL835 PLUS/ ALTO	ELECTRONIC	120	2' X 4' DIRECT/INDIRECT PENDANT FIXTURE WITH WHITE CROSS BLADE BAFFLE. (2) 1-LAMP PROGRAM RAPID-START <10% THD ELECTRONIC BALLAST	PENDANT	FINELITE S12-ID-WCB-2T8-SC-91 W-OPEN-120-FA-FE-C1 -0.88 OR APPROVED EQUAL	1. MOUNT BOTTOM OF FIXTURE AT 8'0"
A1EM	2x32	F32T8/ TL835 PLUS/ ALTO	ELECTRONIC	120	SAME AS FIXTURE TYPE 'A1' EXCEPT WITH 2-LAMP BODINE EMERGENCY BALLAST ON UNSWITCHED HOT FROM SAME LIGHTING CIRCUIT AS FIXTURE.	PENDANT	FINELITE S12-ID-WCB-2T8-SC-91 W-OPEN-120-FA-FE-C1 -0.88-EM OR APPROVED EQUAL	1. MOUNT BOTTOM OF FIXTURE AT 8'0" 2. SEE DETAIL 4/E0-6.0 AND DETAIL 8/E0-6.0 FOR EMERGENCY BALLAST WIRING
B1	1x32	F32T8/ TL835 PLUS/ ALTO	ELECTRONIC	120	1' X 4' WRAP AROUND LINEAR LIGHTING FIXTURE, 22-GUAGE DIE-FORMED C.R.S, ACRYLIC PRISMATIC DIFFUSER. 1 LAMP PROGRAM RAPID-START <10% THD ELECTRONIC BALLASTS OR APPROVED EQUAL	SURFACE	H.E. WILLIAMS 20-4-132-A-EB1-120 OR APPROVED EQUAL	
B1EM	1x32	F32T8/ TL835 PLUS/ ALTO	ELECTRONIC	120	SAME AS FIXTURE TYPE 'B1' EXCEPT WITH 1-LAMP BODINE EMERGENCY BALLAST ON UNSWITCHED HOT FROM SAME LIGHTING CIRCUIT AS FIXTURE.	SURFACE	H.E. WILLIAMS 20-4-132-A-EB1-120 OR APPROVED EQUAL	1. SEE DETAIL 4/E0-6.0 AND DETAIL 8/E0-6.0 FOR EMERGENCY BALLAST WIRING
B2	1x32	F32T8/ TL835 PLUS/ ALTO	ELECTRONIC	120	1' X 4' WRAP AROUND LINEAR LIGHTING FIXTURE, 22-GUAGE DIE-FORMED C.R.S, ACRYLIC PRISMATIC DIFFUSER. 1 LAMP PROGRAM RAPID-START <10% THD ELECTRONIC BALLASTS OR APPROVED EQUAL	WALL	H.E. WILLIAMS 20-4-132-A-EB1-120 OR APPROVED EQUAL	1. MOUNT BOTTOM OF FIXTURE AT 8'0"
P1	42W	GU24 BI-PIN CFL	ELECTRONIC	120	16" WAREHOUSE PORCELAIN PENDANT WITH WIRE GUARD AND CFL SOCKET.	PENDANT	IVANHOSE SKY CHIEF C-WHS16-350-SBK-WC -CFL SOCKET OR APPROVED EQUAL	1. MOUNT BOTTOM OF FIXTURE AT 7'0"
P2	42W	GU24 BI-PIN CFL	ELECTRONIC	120	SAME AS FIXTURE TYPE 'P1' EXCEPT WITH GOOSE NECK MOUNTING, CONTROLLED BY PHOTOSENSOR	GOOSE NECK	IVANHOSE SKY CHIEF G-WHS16-350-G-975-W C-CFL SOCKET OR APPROVED EQUAL	1. MOUNT BOTTOM OF FIXTURE AT 9'0"
ZA	1x13W	CFL	ELECTRONIC	120	5-1/2"W x 5-1/4"H x 4"D BORDEN 718 WET LOCATION WEDGE DOWNLIGHT,ALUMINUM HOUSING (COLOR AS DIRECTED BY THE ARCHITECT). HIGH TRANSMISSION CLEAR REFRACTIVE ACRYLIC LENS	WALL	BORDEN 718-CFL/13-120-CCA OR APPROVED EQUAL	1. MOUNT BOTTOM OF FIXTURE AT 8'0"
ZAEM	1x13W	CFL	ELECTRONIC	120	SAME AS FIXTURE TYPE 'ZA' EXCEPT WITH REMOTE MOUNTED EMERGENCY BATTERY PACK ON UNSWITCHED HOT FROM SAME LIGHTING CIRCUIT AS FIXTURE.	WALL	BORDEN 718-CFL/13-120-CCA-R EM OR APPROVED EQUAL	1. MOUNT BOTTOM OF FIXTURE AT 8'0" 2. SEE DETAIL 4/E0-6.0 AND DETAIL 8/E0-6.0 FOR EMERGENCY BALLAST WIRING
ZB	26W	CFL	ELECTRONIC	120	12" X 18" CORD HUNG PENDANT CFL FIXTURE. UL DAMP LISTED. CLEAR VAPOR PROOF GLASS	PENDANT	BARN LIGHT ELECTRIC C-ULSI18-PC-SBK-CLR -GU-24 BI-PIN SOCKET OR APPROVED EQUAL. COLOR TO BE COORDINATED WITH ARCHITECT	1. MOUNT BOTTOM OF FIXTURE AT 10'0"
ZC	18W	CFL	ELECTRONIC	120	10.5" X 12" CORD HUNG PENDANT CFL FIXTURE. UL DAMP LISTED. CLEAR VAPOR PROOF GLASS	PENDANT	BARN LIGHT ELECTRIC C-ULSI12-PC-PC-SBK-CLR-GU-24 BI-PIN SOCKET OR APPROVED EQUAL. COLOR TO BE COORDINATED WITH ARCHITECT	1. MOUNT BOTTOM OF FIXTURE AT 8'0"
ZD	15.4	LED	ELECTRONIC	120	6" ROUND ALUMINUM BOLLARD WITH FLAT TOP. CERTIFIED FOR USE IN OUTDOOR WET LOCATION. 4000 K CCT 80 CRI	BOLLARD	HE WILLIAMS OSA6R-LED*PH20-AC-FT OR APPROVED EQUAL. COLOR TO BE COORDINATED WITH ARCHITECT	
X	3.5	LED	ELECTRONIC	120	EXIT SIGN WITH SATIN ALUMINUM FINISH. NICKEL CADMIUM BATTERY WITH 90 MINUTE RUN TIME. UL LISTED.	WALL MOUNTED	MCPHILBEN 45VXW1 OR APPROVED EQUAL. COLOR TO BE COORDINATED WITH ARCHITECT	1. MOUNT BOTTOM OF FIXTURE AT 8'6"
X2	2x5.4W	H	ELECTRONIC	120	SELF CONTAINED EMERGENCY LIGHTING UNIT. WHITE THERMOPLASTIC HOUSING WITH EXTERIOR WIRE GUARD, SEALED LEAD CALCIUM, (2) 5.4W TUNGSTEN LAMPS, 90 MINUTE BATTERY. UL LISTED.	WALL MOUNTED	MCPHILBEN CTX6L12WCSWA OR APPROVED EQUAL	1. MOUNT BOTTOM OF FIXTURE AT 9'0"

Project Title:

City of Cupertino - McClellan Ranch Preserve Environmental Education Center Re-Bid

Design Firm:
SIEGEL & STRAIN Architects
1295 59th Street
Emeryville, CA 94608
510 / 547-8092
FAX 510 / 547-2604
info@siegelstrain.com

Consultant:
INTEGRAL GROUP
1084 Foxworthy Avenue
Suite 150
San Jose, CA 95118
408 448-6300
408 448-6301 fax
www.integralgroup.com

Stamp:

REGISTERED PROFESSIONAL ENGINEER
DAVID K. KANOUSE
E 14003
EXP. 12-31-14
ELECTRICAL
STATE OF CALIFORNIA

No.	Description	Date

Issue Note:
CONSTRUCTION DOCUMENTS 100%
01/10/2014

Project ID:	11-020
File Name:	JSWB-A-00.rvt
Drawn by:	Ben Buschmann
Checked by:	David Maino
Plot Date:	01/08/2014
Scale:	

Sheet Title:
SCHEDULES

Sheet No.:
E0-5.0

EQUIPMENT SCHEDULE

EQUIPMENT DESIGNATION	EQUIPMENT TYPE	LOCATION	PACKAGE UNITS		AMPS	HORSEPOWER	KVA	VOLTAGE/PHASE, QTY WIRES	CONNECTION TO EMS	INTERLOCK WITH	MOTOR STARTERS			AUTOMATIC CONTROLLING DEVICES	CONNECTION TO FA PANEL	CONTROL WIRING AS REQUIRED	FUSED DISCONNECT SWITCH (AT EQUIP)	LOCKOUT TOGGLE SWITCH (AT EQUIP)	PANEL AND CIRCUIT NO	CONDUIT (IN)	POWER WIRING	REMARKS
			MCA	MOCP							TYPE	STARTER NEMA SIZE	AUXILIARY DEVICES IN STARTERS									
HP-1	AIR SOURCE HEAT PUMP	OUTDOORS	29.0	50				240/1, 3W		RM-1, RADIANT FLOORS E, DUCT SMOKE					E	E	E		A-16/18	3/4	(3) #8 + (1) #10	
CU-1	CONDENSING UNIT	OUTDOORS	15.0	30				240/1, 3W		E, FC-1, FC-2, FC-3							E		A-20/22	3/4	(3) #12 + (1) #12	
EF-1	ELECTRIC FAN	JC			0.1			120/1, 2W		E, OCCUPANCY SENSOR				2/M1-5.1		E		E	A-29	3/4	(2) #12 + (1) #12	
EF-2	ELECTRIC FAN	TOILET			0.1			120/1, 2W		E, OCCUPANCY SENSOR				2/M1-5.1		E		E	A-29	3/4	(2) #12 + (1) #12	
EF-3	ELECTRIC FAN	MECH			0.1			120/1, 2W		E, OCCUPANCY SENSOR				2/M1-5.1		E		E	A-29	3/4	(2) #12 + (1) #12	
EF-4	ELECTRIC FAN	TOILET			0.1			120/1, 2W		E, OCCUPANCY SENSOR				2/M1-5.1		E		E	A-29	3/4	(2) #12 + (1) #12	
FC-1	FAN COIL	MEETING ROOM B			0.57			240/1, 3W		E, CU-1							E		A-31/33	3/4	(3) #12 + (1) #12	
FC-2	FAN COIL	STORAGE			0.57			240/1, 3W		E, CU-1							E		A-31/33	3/4	(3) #12 + (1) #12	
FC-3	FAN COIL	IT			0.76			240/1, 3W		E, CU-1							E		A-31/33	3/4	(3) #12 + (1) #12	
EWH-1	WATER HEATER	JC		100	75.0			240/1, 3W									E		A-35/37	1-1/2	(3) #3 + (1) #8	
EWH-2	WATER HEATER	KITCHENETTE SINK		100	50.0			240/1, 3W									E		A-28/30	1-1/2	(3) #3 + (1) #8	
EWH-3	WATER HEATER	MEETING ROOM		100	50.0			240/1, 3W									E		A-32/34	1-1/2	(3) #3 + (1) #8	
EWH-4	WATER HEATER	TOILET		30	20.0			240/1, 3W									E		A-36/38	3/4	(3) #10 + (1) #10	

EQUIPMENT SCHEDULE ABBREVIATIONS:

AC AUXILIARY CONTACTS, 1 NC, 1 NO
AC2 AUXILIARY CONTACTS, 2 NC, 2 NO
B FURNISHED BY OWNER & INSTALLED BY ELECTRICAL CONTRACTOR
CMCP COMBINATION MOTOR STARTER WITH MOTOR CIRCUIT PROTECTOR
CMFS COMBINATION MOTOR STARTER WITH FUSED SWITCH
CNTR CONTRACTOR
CR CONTROL RELAY
CPT CONTROL POWER TRANSFORMER
E FURNISHED & INSTALLED BY ELECTRICAL CONTRACTOR
EMS ENERGY MANAGEMENT SYSTEM
EPO EMERGENCY POWER OFF BUTTON
FA FIRE ALARM
HOA 3 - POSITION SELECTOR SWITCH (HAND/OFF/AUTO)
M FURNISHED BY MECHANICAL & INSTALLED BY ELECTRICAL CONTRACTOR
MCA MINIMUM CIRCUIT AMPS
MOCP MAXIMUM OVER CURRENT PROTECTION
MAN MANUAL STARTER (<10HP)
MS MAGNETIC STARTER
NC NORMALLY CLOSED
NO NORMALLY OPEN
O FURNISHED & INSTALLED BY OTHER DIVISIONS
OL OVERLOAD RELAY
PL LED PILOT LIGHT RED ON, GREEN OFF
PS START/STOP PUSH BUTTON
SD SMOKE DETECTOR
SM ON/OFF TOGGLE DISCONNECT @ MOTOR
SP SUPERVISORY ALARM PANEL
SSA 3 - POSITION SELECTOR SWITCH (START/STOP/AUTO) SPRING RELEASE TYPE TO AUTO POSITION
SS ELECTRONIC SOFT STARTER
TS TIME SWITCH
VFD VARIABLE FREQUENCY DRIVE
WP WEATHERPROOF

NOTES:
1. EQUIPMENT SCHEDULE ABBREVIATIONS DO NOT APPLY TO EQUIPMENT DESIGNATION COLUMN.
2. VERIFY CB/FUSE AND WIRING REQUIREMENTS WITH SUBMITTALS PRIOR TO WIRING UNITS.

Project Title:

City of Cupertino - McClellan Ranch Preserve
Environmental Education Center
Re-Bid

Design Firm:
SIEGEL & STRAIN Architects
1295 59th Street
Emeryville, CA 94608
510 / 547-8092
FAX 510 / 547-2604
info@siegelstrain.com

Consultant:
INTEGRAL GROUP
1084 Foxworthy Avenue
Suite 150
San Jose, CA 95118
408 448-6300
408 448-6301 fax
www.integralgroup.com

Stamp:

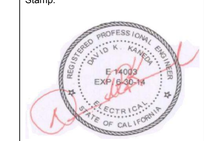

No.	Description	Date

Issue Note:
CONSTRUCTION DOCUMENTS 100%
01/10/2014

Project ID:	11-020
File Name:	JSWB-A-00.rvt
Drawn by:	Ben Buschmann
Checked by:	David Maino
Plot Date:	01/08/2014
Scale:	

Sheet Title:
SCHEDULES

Sheet No.:
E0-5.1

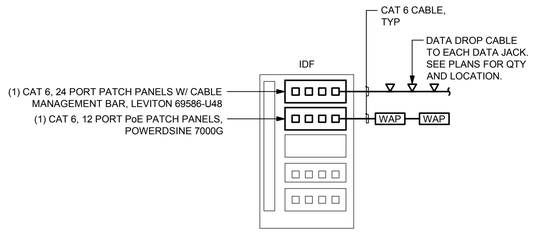

DETAIL NOTES

1. PROVIDE VERTICAL CABLE LADDER WITH 90° RADIUS BEND AND HORIZONTAL CABLE LADDER TO CEILING MOUNT SIGNAL CONDUITS OR J-HOOKS.
2. THE CONTRACTOR SHALL TERMINATE, TEST AND PERMANANTLY LABEL ALL ACTIVE LINES FROM EACH DATA DEVICE TO IDF, MDF AND OUTSIDE LINES.

1 DATA RISER DIAGRAM

NOT TO SCALE

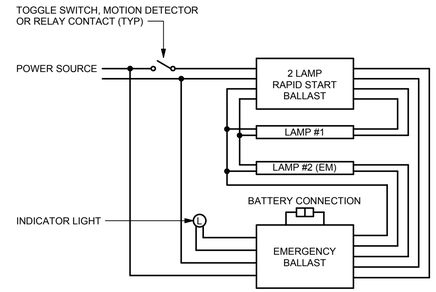

DETAIL NOTES

1. THE INVERTER BALLAST AND AC BALLAST MUST BE FED FROM THE SAME BRANCH CIRCUIT IN ALL CASES, INVERTER BALLAST SHALL BE FED FROM AN UNSWITCHED SOURCE, BASED ON BODINE.

4 TYPICAL SWITCHED ONE LAMP EMERGENCY WIRING

NOT TO SCALE

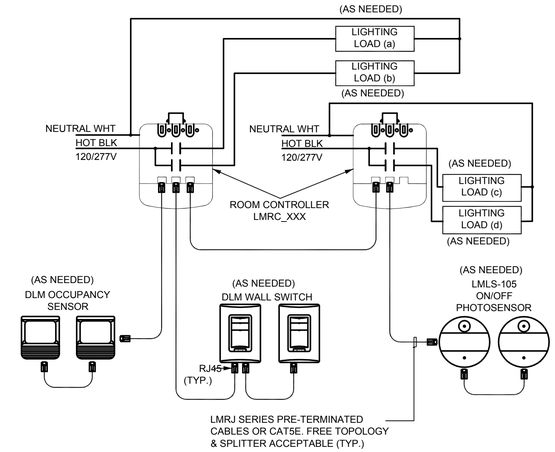

7 DIGITAL LIGHTING CONTROL ON / OFF WIRING DIAGRAM

NOT TO SCALE

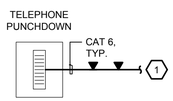

GENERAL DETAIL NOTES

A. PROVIDE CABLES, PATCH CORDS, PUNCHBLOCKS, AND ALL COMPONENTS, HARDWARE & FITTINGS FOR A FULLY FUNCTIONAL TELEPHONE SYSTEM.

DETAIL NOTES

1. SEE PLANS FOR LOCATIONS AND QUANTITIES.

2 TELEPHONE RISER DIAGRAM

NOT TO SCALE

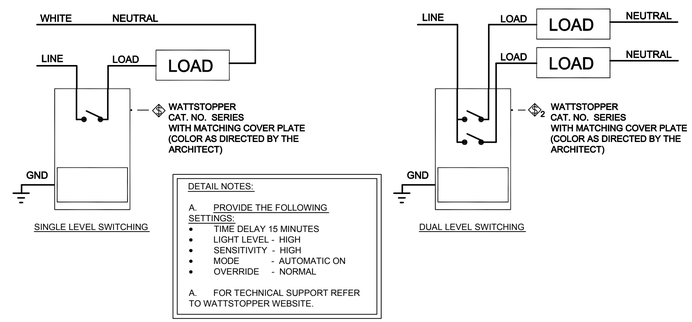

5 SINGLE & DUAL WALL OCCUPANCY SENSOR

NOT TO SCALE

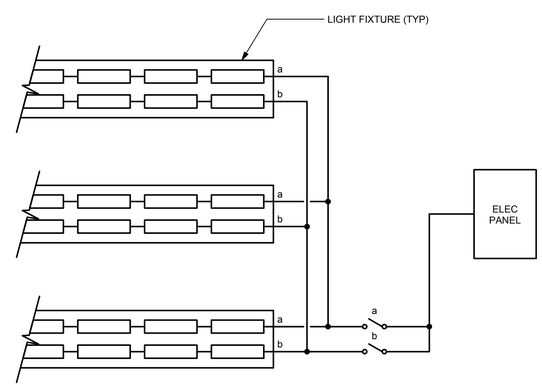

3 TYPICAL LIGHTING CONTROLS

NOT TO SCALE

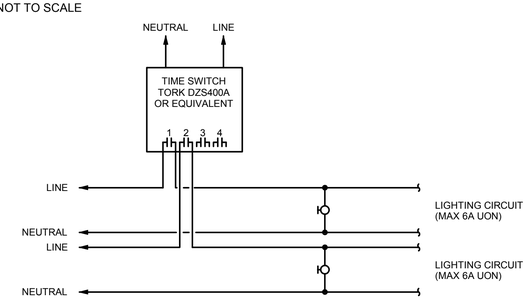

DETAIL NOTES

1. TIME SWITCH SHALL BE PROVIDED WITH MINIMUM (30 DAY) BATTERY BACKUP.
2. SET TIMES AS FOLLOWS UNLESS DIRECTED OTHERWISE BY OWNER:
   CHANNEL # 1: "ON @ ONE HOUR BEFORE SUNSET" "OFF @ 10:00pm"
   CHANNEL # 2: "ON @ ONE HOUR BEFORE SUNSET" "OFF @ ONE HOUR AFTER SUNRISE"
   CHANNELS # 3 & 4 ARE SPARE.
3. INSTALL IN ELECTRICAL ROOM BESIDE PANEL IN NEMA 1 ENCLOSURES UON. (TYPICAL)

6 TIME SWITCH FOR 4 LINE VOLTAGE CIRCUITS

NOT TO SCALE

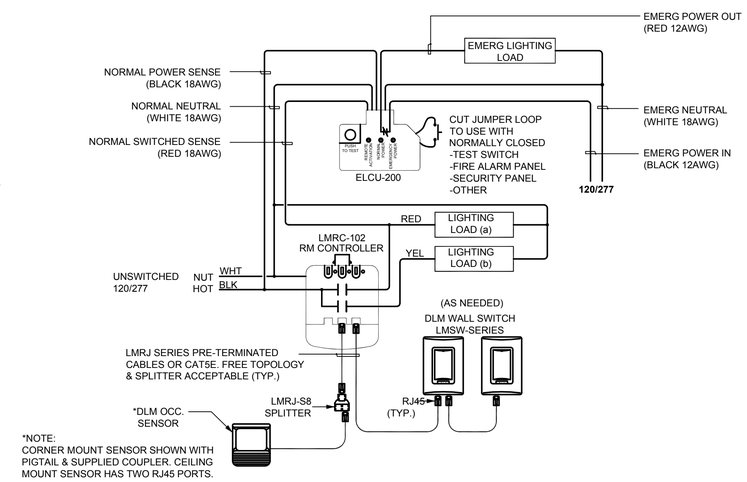

8 DIGITAL LIGHTING CONTROL SWITCHED EMERGENCY LIGHTING

NOT TO SCALE

Project Title:

City of Cupertino - McClellan Ranch Preserve Environmental Education Center Re-Bid

Design Firm:
SIEGEL & STRAIN Architects
1295 59th Street
Emeryville, CA 94608
510 / 547-8092
FAX 510 / 547-2604
info@siegelstrain.com

Consultant:
INTEGRAL GROUP
1084 Foxworthy Avenue
Suite 150
San Jose, CA 95118
408 448-6300
408 448-6301 fax
www.integralgroup.com

Stamp:

No.	Description	Date

Issue Note:
CONSTRUCTION DOCUMENTS 100%
01/10/2014

Project ID:	11-020
File Name:	JSWB-A-00.rvt
Drawn by:	Ben Buschmann
Checked by:	David Maino
Plot Date:	01/08/2014
Scale:	

Sheet Title:
DIAGRAMS

Sheet No.:
E0-6.0

NOTE:
THE PHOTOVOLTAIC CONTRACTOR SHALL PROVIDE, SUBMIT AND PROCESS ALL CALIFORNIA SOLAR INITIATIVE (CSI) AND FEDERAL SOLAR REBATE AND TAX CREDIT APPLICATIONS AND DOCUMENTATION AND RENDER THE FULL REBATE OR TAX CREDIT AMOUNTS TO THE OWNER. IN ADDITION, THE PHOTOVOLTAIC CONTRACTOR SHALL PROVIDE AND INSTALL ALL CSI REQUIRED NET METER AND PHOTOVOLTAIC SYSTEM METERS AND A 2-YEAR MINIMUM CONTRACT FOR PHOTOVOLTAIC SYSTEM OFF-SITE MONITORING, DATA COLLECTION AND REPORTING PER PG&E'S RULES, REGULATIONS AND STANDARDS.

FEEDER SCHEDULE

TAG	SETS	CONDUCTOR	GROUND	CONDUIT (IN)	INSULATION	REMARKS
1	PER PG&E	PER PG&E	PER PG&E	PER PG&E	PER PG&E	UTILITY PRIMARY PG&E
2	(2)	PER PG&E	PER PG&E	5"	PER PG&E	UTILITY SECONDARY
A1	(1)	(2) #12	#12	N/A	USE-2 / RHW-2	
B5	(1)	(3) #6	(1) #10	1	XHHW-2	
B6	(1)	(3) #3	(1) #8	1-1/2	XHHW-2	
B14	(1)	(3) 500 KCMIL	(1) #3	4	XHHW-2	
B	(1)	(2) #12	#12	SEE DWGS	USE-2 / RHW-2	INCREASE CONDUCTOR SIZE TO #10AWG FOR DISTANCES GREATER THAN 150 FEET.
C1	(1)	(2) #6	#10	1	THWN-2	FEEDER SIZE BASED ON VOLTAGE DROP
D1	(1)	(2) #6	#10	1	XHHW-2	

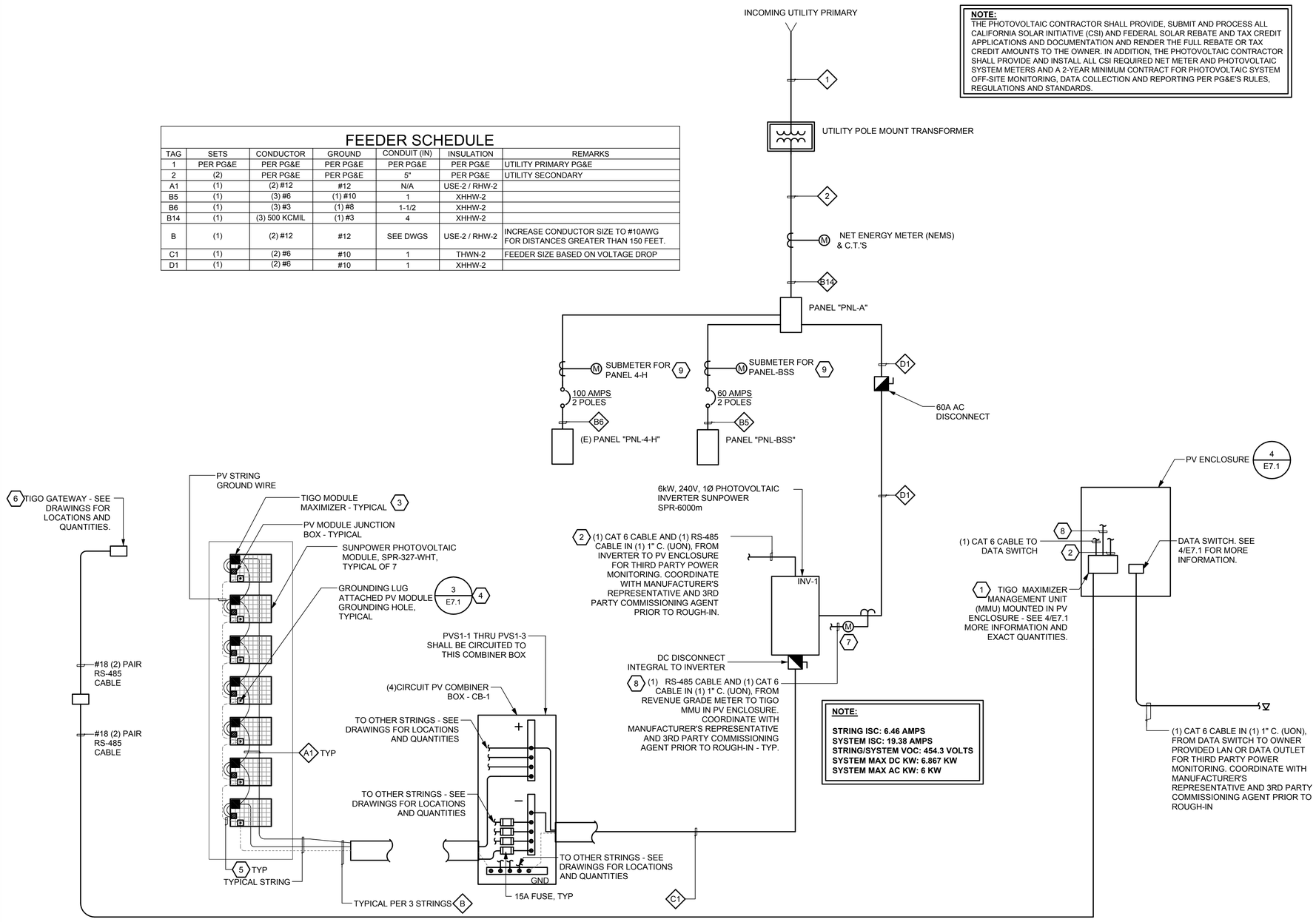

NOTE:

STRING ISC: 6.46 AMPS
SYSTEM ISC: 19.38 AMPS
STRING/SYSTEM VOC: 454.3 VOLTS
SYSTEM MAX DC KW: 6.867 KW
SYSTEM MAX AC KW: 6 KW

1 SINGLE LINE DIAGRAM

SCALE: NONE

GENERAL NOTES

A. CONTRACTOR SHALL PROVIDE SIGNAGE TO INDICATE THE LOCATION OF PHOTOVOLTAIC SYSTEM DISCONNECT(S) PER PG&E'S RULES, REGULATIONS, AND REQUIREMENTS. AT MINIMUM SIGNAGE SHALL BE ENGRAVED LAMICOID NAMEPLATES SIZED TO MEET THE PG&E'S RULES, REGULATIONS, AND REQUIREMENTS.

B. SEE DETAIL 4 ON SHEET E1-7.2 FOR ADDITIONAL SIGNAGE REQUIREMENTS.

SHEET NOTES

1. CONTRACTOR SHALL PROVIDE WITH MMU THE TIGO ENERGY MAXIMANAGER SOFTWARE AND ALL PARTS AND PIECES NECESSARY FOR A FULLY FUNCTIONAL TIGO PV ENERGY MANAGEMENT SYSTEM. SOFTWARE SHALL BE PROGRAMMED TO SEND AN ALERT EMAIL AND PHONE MESSAGE TO A PERSON OR ENTITY DESIGNATED BY THE OWNER UPON THE REMOVAL OF A PV MODULE FROM A TIGO MODULE MAXIMIZER.
2. RS-485 CABLE BETWEEN MMU AND INVERTER. INSTALL CABLE PER MMU'S AND INVERTER'S SPECIFICATIONS AND INSTALLATION MANUALS. INVERTERS WILL BE DAISY CHAINED TOGETHER WITH RS-485 CABLE TO THE MMU.
3. MOUNT TIGO MODULE MAXIMIZER ON THE BACK OF THE PV MODULE. INSTALL PER MANUFACTURER'S SPECIFICATIONS AND INSTALLATION MANUAL. CONTRACTOR SHALL PROVIDE ALL NECESSARY MOUNTING HARDWARE TO ATTACH MODULE MAXIMIZER TO THE BACKSIDE OF PV MODULE.
4. ATTACH GROUND LUG TO PV MODULE FRAME GROUND HOLE PER GROUND' LUG'S AND PV MODULE'S SPECIFICATIONS AND INSTALLATION MANUALS. VERIFY LOCATION OF PV MODULE FRAME GROUND HOLE PRIOR TO INSTALLATION OF GROUND LUG.
5. ATTACH GROUND WIRE TO GROUND LUG PER GROUND' LUG'S AND PV MODULE'S SPECIFICATIONS AND INSTALLATION MANUALS.
6. INSTALL TIGO GATEWAY PER MANUFACTURE'S INSTALLATION MANUAL AND SPECIFICATIONS. CONTRACTOR SHALL NOTE THE LAST GATEWAY CONNECTED IN A DAISY CHAIN OF GATEWAYS HAS TO BE A TERMINATED GATEWAY. REFER TO MANUFACTURER'S INSTALLATION MANUAL FOR ADDITIONAL INFORMATION.
7. PROVIDE AN ELECTRO INDUSTRIES/GAUGE TECH SHARK 100S (OR APPROVED EQUAL) REVENUE GRADE METER WITH ETHERNET COMPATIBILITY AND PROVIDE ALL PARTS AND PIECES NECESSARY FOR A FULLY FUNCTIONAL PV MONITORING SYSTEM AS REQUIRED BY CALIFORNIA SOLAR INITIATIVE (CSI). COORDINATE LOCATION OF METER WITH ELECTRICAL ENGINEER PRIOR TO FINAL ROUGH-IN.
8. RS-485 CABLE BETWEEN MMU AND SHARK METER. INSTALL CABLE PER MMU'S AND SHARK METER'S SPECIFICATIONS AND INSTALLATION MANUALS.
9. PROVIDE SHARK 200S METER OR APPROVED EQUAL FOR MONITORING ENERGY USAGE, INSTANTANEOUS POWER CONSUMPTION, POWER FACTOR, AND VOLTAGE.

Project Title:

City of Cupertino - McClellan Ranch Preserve Environmental Education Center Re-Bid

Design Firm:

SIEGEL & STRAIN Architects
1295 59th Street
Emeryville, CA 94608
510 / 547-8092
FAX 510 / 547-2604
info@siegelstrain.com

Consultant:

INTEGRAL GROUP
1084 Foxworthy Avenue
Suite 150
San Jose, CA 95118
408 448-6300
408 448-6301 fax
www.integralgroup.com

Stamp:

REGISTERED PROFESSIONAL ENGINEER DAVID K. MAINO E-14003 EXP. 12-31-14 ELECTRICAL STATE OF CALIFORNIA

No.	Description	Date

Issue Note:

CONSTRUCTION DOCUMENTS 100%
01/10/2014

Project ID:	11-020
File Name:	JSWB-A-00.rvt
Drawn by:	Ben Buschmann
Checked by:	David Maino
Plot Date:	01/08/2014
Scale:	

Sheet Title:

DIAGRAMS

Sheet No.:

E0-6.1

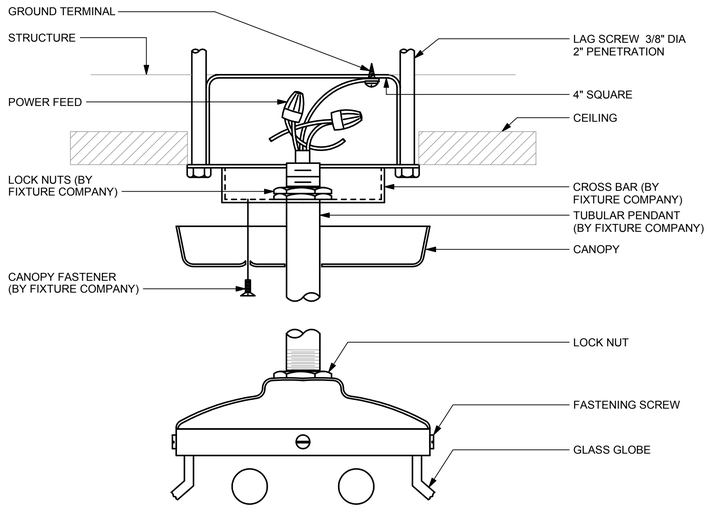

1 PENDANT FIXTURE MOUNTING

NOT TO SCALE

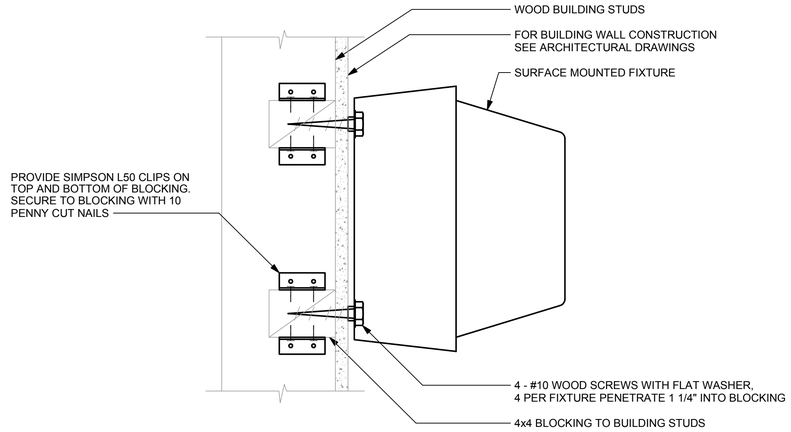

4 WALL FIXTURE MOUNTING ON WOOD STUDS

NOT TO SCALE

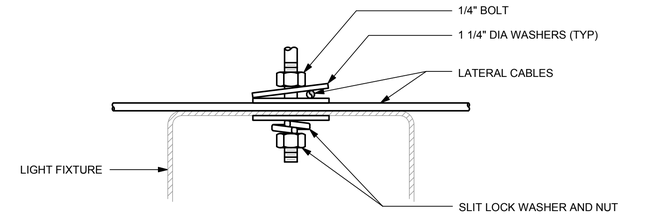

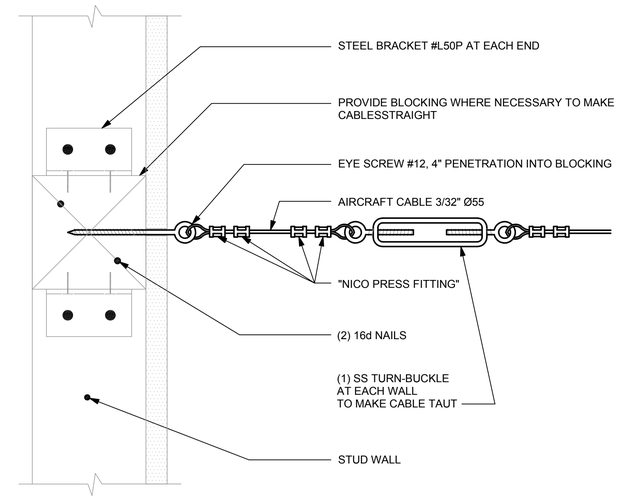

6 SEISMIC CABLE RESTRAINTS

NOT TO SCALE

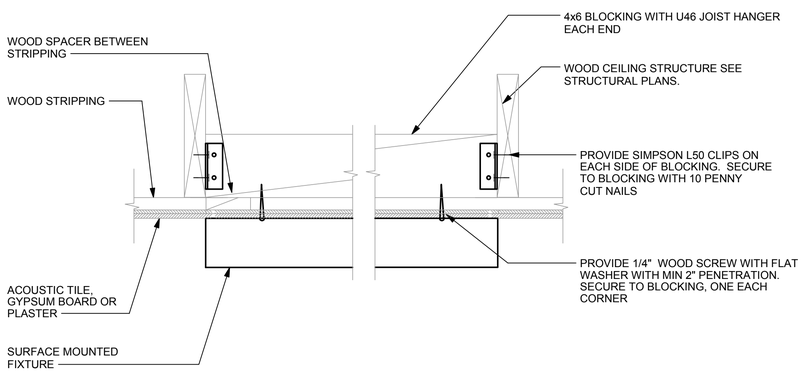

2 WOOD SURFACE FIXTURE MOUNTING

NOT TO SCALE

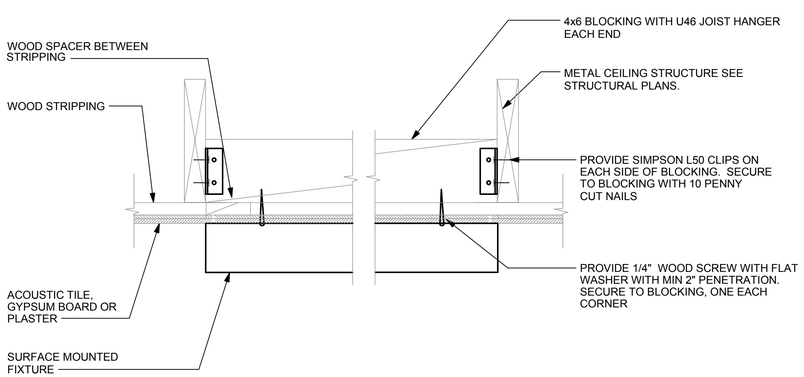

3 METAL SURFACE FIXTURE MOUNTING

NOT TO SCALE

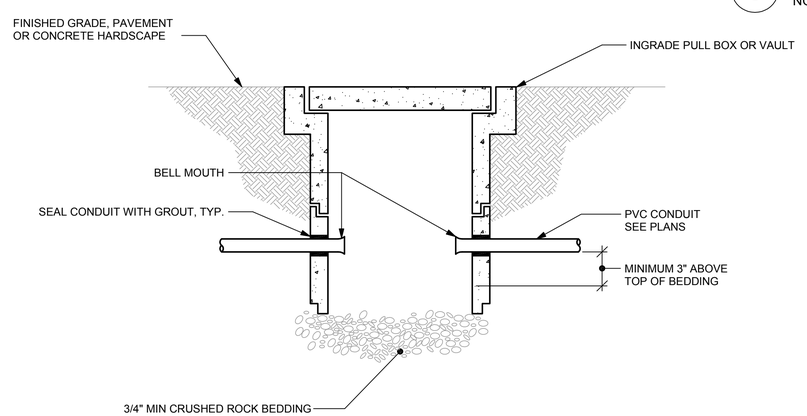

5 INGRADE PULL BOX CONDUIT TERMINATION

NOT TO SCALE

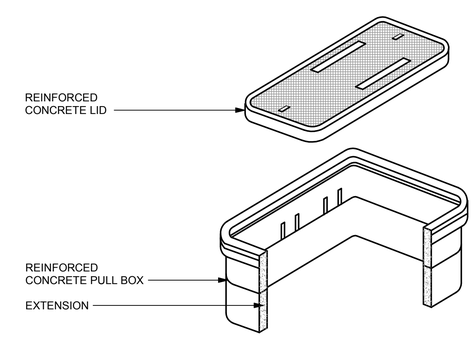

DETAIL NOTES

1. HIGH DENSITY REINFORCED CONCRETE PULL AND JUNCTION BOX WITH END AND SIDE KNOCKOUTS. NON-SETTLING SHOULDERS MAINTAIN GRADE AND FACILITATE BACK FILLING. SIZE PULL BOX PER CODE.
2. PROVIDE MINIMUM OF 6" CRUSHED ROCK BEDDING AT BOTTOM OF BOX FOR DRAINAGE.
3. CHRISTY TYPE "N" SERIES PULL BOX WITH "N" SERIES LID UON OR EQUAL.

7 INGRADE PULL BOX

NOT TO SCALE

Project Title:

City of Cupertino - McClellan Ranch Preserve Environmental Education Center Re-Bid

Design Firm:

SIEGEL & STRAIN Architects
1295 59th Street
Emeryville, CA 94608
510 / 547-8092
FAX 510 / 547-2604
info@siegelstrain.com

Consultant:

INTEGRAL GROUP
1084 Foxworthy Avenue
Suite 150
San Jose, CA 95118
408 448-6300
408 448-6301 fax
www.integralgroup.com

Stamp:

REGISTERED PROFESSIONAL ENGINEER DAVID K. KANDA E 14003 EXP 12-31-14 ELECTRICAL STATE OF CALIFORNIA

No.	Description	Date

Issue Note:

CONSTRUCTION DOCUMENTS 100%
01/10/2014

Project ID:	11-020
File Name:	JSWB-A-00.rvt
Drawn by:	Ben Buschmann
Checked by:	David Maino
Plot Date:	01/08/2014
Scale:	

Sheet Title:

DETAILS

Sheet No.:

E0-7.0

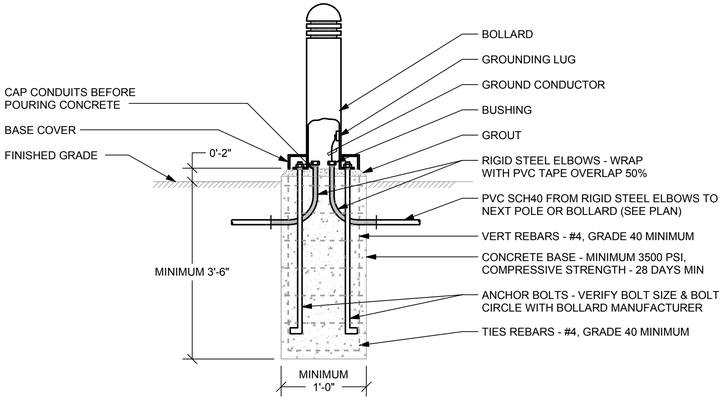

6 FLUSH BOLLARD BASE

NOT TO SCALE

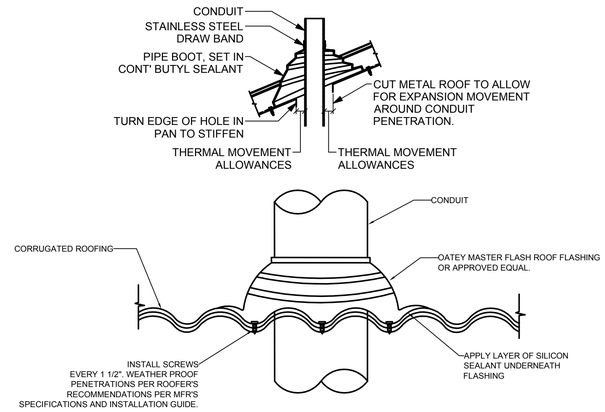

5 METAL ROOF CONDUIT FLASHING

NOT TO SCALE

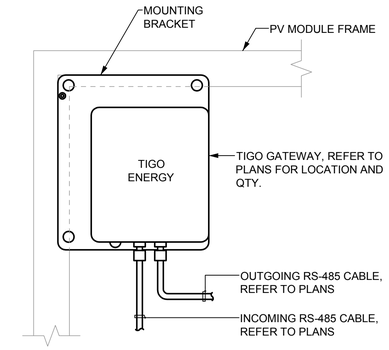

DETAIL NOTES:

1. INSTALL PER MANUFACTURER'S REQUIREMENTS.
2. GATEWAY SHALL BE LOCATED AWAY FROM DIRECT SUNLIGHT OR RAIN.
3. ORIENT GATEWAY SO ANTENNA IS POINTING DOWN.
4. MOUNTING BRACKET PROVIDED WITH TIGO GATEWAY.

2 TIGO GATEWAY MOUNTING DETAIL

NOT TO SCALE

PV ENCLOSURE DETAILS NOTES:

1. ALL ITEMS INSTALLED IN PV ENCLOSURE SHALL BE INSTALLED PER MANUFACTURERS SPECS AND INSTALLATION MANUALS.
2. CONTRACTOR SHALL PROVIDE TIGO ENERGY PV-SAFE WARNING LABELS PER TIGO'S SPECS AND INSTALLATION MANUALS.
3. CONTRACTOR SHALL PROVIDE AN ENGRAVED LAMICOID LABEL ON THE EXTERIOR SIDE OF THE ENCLOSURE DOOR THAT STATES, "IN CASE OF EMERGENCY PRESS PV SAFE BUTTONS LOCATED INSIDE TO DE-ENERGIZE PV SYSTEM(S).
4. CONTRACTOR SHALL INSTALL TIGO COMPONENTS AND PROVIDE ALL PARTS AND PIECES NECESSARY FOR A FULLY FUNCTIONAL SYSTEM.
5. PROVIDE UNI-STRUT SUPPORTS FOR THE PV ENCLOSURE AS REQUIRED.

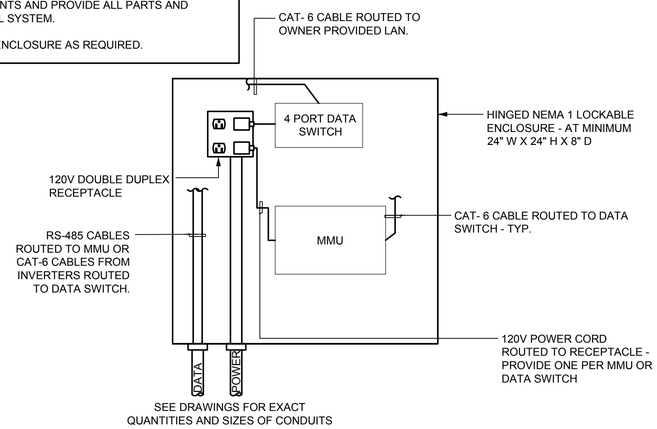

4 PV ENCLOSURE DETAIL - MULTI-USE

NOT TO SCALE

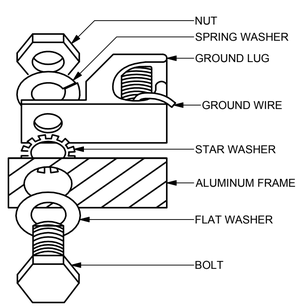

3 PV MODULE GROUNDING LUG DETAIL

NOT TO SCALE

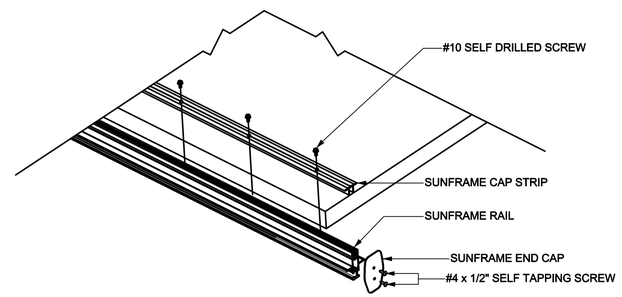

ISOMETRIC VIEW

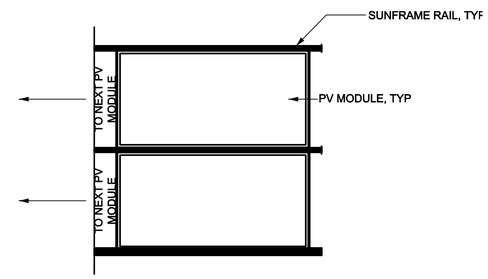

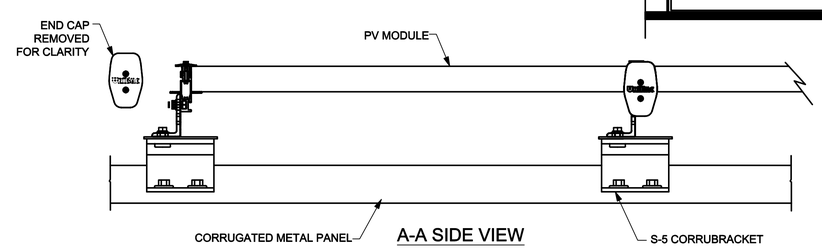

A-A SIDE VIEW

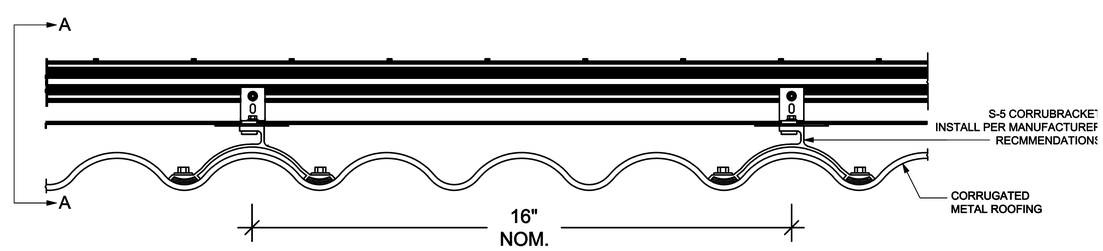

FRONT VIEW

1 UNIRAC SUNFRAME MOUNTING DETAIL

NOT TO SCALE

Project Title:

City of Cupertino - McClellan Ranch Preserve Environmental Education Center Re-Bid

Design Firm:

SIEGEL & STRAIN Architects
1295 59th Street
Emeryville, CA 94608
510 / 547-8092
FAX 510 / 547-2604
info@siegelstrain.com

Consultant:

INTEGRAL GROUP
1084 Foxworthy Avenue
Suite 150
San Jose, CA 95118
408 448-6300
408 448-6301 fax
www.integralgroup.com

Stamp:

No.	Description	Date

Issue Note:

CONSTRUCTION DOCUMENTS 100%
01/10/2014

Project ID:	11-020
File Name:	JSWB-A-00.rvt
Drawn by:	Ben Buschmann
Checked by:	David Maino
Plot Date:	01/08/2014
Scale:	

Sheet Title:

DETAILS

Sheet No.:

E0-7.1

TO BE MOUNTED ON ALL ELECTRICAL SERVICE PANEL COVERS

WARNING: DEATH OR SERIOUS INJURY MAY RESULT

THIS EQUIPMENT IS INTERCONNECTED TO A SOLAR ELECTRICAL GENERATION SYSTEM, WHICH OPERATES CONTINUOUSLY. DISCONNECT THE D.C. DISCONNECTS AND THE A.C. DISCONNECT PRIOR TO SERVICING OR WORKING ON THE EQUIPMENT

TO BE MOUNTED ON MAIN AC DISCONNECT SWITCH

PHOTOVOLTAIC SYSTEM DISCONNECT

MAX OPERATING CURRENT: XXX A

OPERATING AC VOLTAGE: XXX V

TO BE MOUNTED ON ALL DC DISCONNECT SWITCHES

PHOTOVOLTAIC DC DISCONNECT

OPERATING CURRENT: XXX A
OPERATING VOLTAGE: XXX V
MAXIMUM VOLTAGE: XXX V
SHORT-CIRCUIT CURRENT: XXX A

TO BE MOUNTED ON ALL ELECTRICAL SERVICE PANEL COVERS

SOLAR PHOTOVOLTAIC DISCONNECT SHUT-OFF

SHUT OFF THE SOLAR PHOTOVOLTAIC D.C. DISCONNECT AND THE A.C. DISCONNECT PRIOR TO SERVICING OR WORKING ON THE SOLAR PHOTOVOLTAIC SYSTEM OR ANY INTERCONNECTED A.C. EQUIPMENT. THE SOLAR PHOTOVOLTAIC SYSTEM PROVIDES CONTINUOUS POWER UNLESS DISCONNECTED

TO BE MOUNTED ON ALL SYSTEM-RELATED AC ACCUMULATION PANEL COVERS

AC ACCUMULATION PANEL

FOR PHOTOVOLTAIC SYSTEM
NO USER SERVICEABLE PARTS
QUALIFIED PERSONNEL USE ONLY

DO NOT ADD LOAD CIRCUITS

TO BE MOUNTED ON ALL SYSTEM-RELATED JUNCTION AND PULL BOXES

CAUTION SOLAR ELECTRIC SYSTEM

TO BE MOUNTED ON ALL INTERIOR AND EXTERIOR DC CONDCUIT, RACEWAYS, AND CALBE ASSEMBLIES AT 10' INTERVALS. TURNS, AND ABOVE & BELOW PENETRATIONS

CAUTION SOLAR CIRCUIT

DETAIL NOTES:

SIGNAGE SHALL COMPLY WITH THE FOLLOWING:

1. RED BACKGROUND
2. WHITE LETTERING
3. MINIMUM 1/2" LETTER HEIGHT
4. ALL CAPITAL LETTERS
5. ARIAL OR SIMILAR FONT, NON-BOLD
6. REFLECTIVE, WEATER-RESISTANT MATERIAL SUITABLE FOR THE ENVIROMENT

4 PHOTOVOLTAIC SIGNAGE

NOT TO SCALE

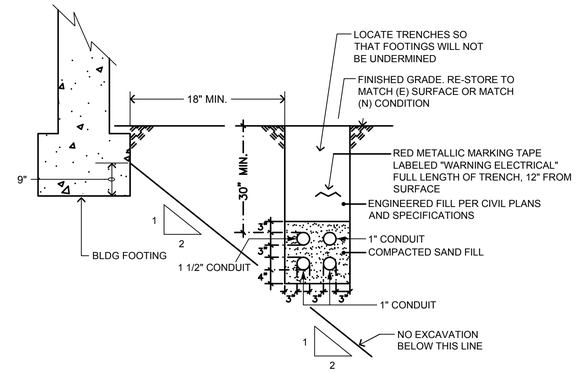

DETAIL NOTES:

A. TRENCH DETAIL SHOWN IS TYPICAL. VERIFY EXACT CONDUIT COUNTS AND TRENCH OCCUPANTS WITH PLAN. DIMENSIONS ARE MINIMUM UON.

B. BACKFILL UP TO LEVEL INDICATED WITH CLEAN SAND, COMPACTED TO 95% RELATIVE COMPACTION AT OPTIMUM MOISTURE CONTENT. CONTRACTOR MAY USE IMPORTED FILL TO ACHIEVE COMPACTION.

C. ALL CONDUITS SHALL BE SCHEDULE 40 PVC.

D. CONTRACTOR SHALL USE EXTREME CAUTION NOT TO DISRUPT EXISTING UTILITIES. INSTALLATION WILL REQUIRE HAND EXCAVATION TO INSTALL NEW UTILITIES ADJACENT TO OR UNDER EXISTING UTILITY SERVICES. VERIFY EXACT LOCATIONS OF EXISTING UTILITIES IN THE FIELD.

E. CONTRACTOR SHALL VERIFY ALL REQUIREMENTS WITH UTILITY COMPANIES PRIOR TO TRENCHING.

1 BLACKSMITH SHOP TRENCH

NOT TO SCALE

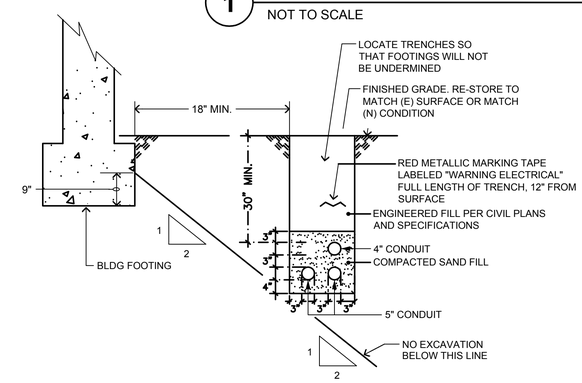

DETAIL NOTES:

A. TRENCH DETAIL SHOWN IS TYPICAL. VERIFY EXACT CONDUIT COUNTS AND TRENCH OCCUPANTS WITH PLAN. DIMENSIONS ARE MINIMUM UON.

B. BACKFILL UP TO LEVEL INDICATED WITH CLEAN SAND, COMPACTED TO 95% RELATIVE COMPACTION AT OPTIMUM MOISTURE CONTENT. CONTRACTOR MAY USE IMPORTED FILL TO ACHIEVE COMPACTION.

C. ALL CONDUITS SHALL BE SCHEDULE 40 PVC.

D. CONTRACTOR SHALL USE EXTREME CAUTION NOT TO DISRUPT EXISTING UTILITIES. INSTALLATION WILL REQUIRE HAND EXCAVATION TO INSTALL NEW UTILITIES ADJACENT TO OR UNDER EXISTING UTILITY SERVICES. VERIFY EXACT LOCATIONS OF EXISTING UTILITIES IN THE FIELD.

E. CONTRACTOR SHALL VERIFY ALL REQUIREMENTS WITH UTILITY COMPANIES PRIOR TO TRENCHING.

2 PG&E TRENCH

NOT TO SCALE

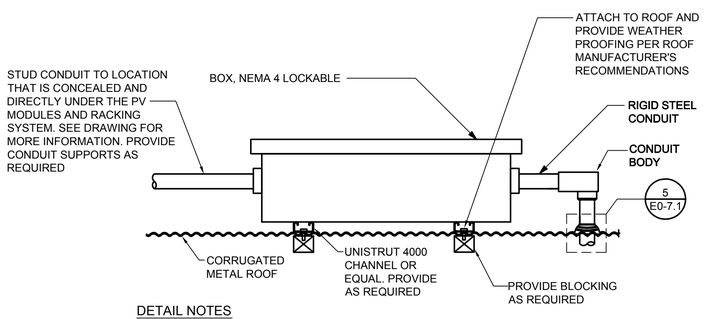

DETAIL NOTES

1. REFER TO SPECIFICATIONS FOR ADDITIONAL INFORMATION.
2. CONTRACTOR TO COORDINATE WITH ROOF MANUFACTURER FOR COMPLETE INSTALLATION.
3. INSTALL COMBINER BOX/PULL BOX PER MANUFACTURER'S SPECIFICATIONS AND INSTALLATION GUIDE.

6 COMBINER BOX OR PULL BOX MOUNTING DETAIL

NOT TO SCALE

DETAIL NOTES:

1. THE CONTRACTOR SHALL VERIFY ALL SECURITY SYSTEMS REQUIREMENTS WITH THE PROJECT SECURITY CONTRACTOR PRIOR TO ROUGH-IN AND PROVIDE ALL EMPTY CONDUITS, PULLSTRINGS AND J-BOXES PER THE SECURITY COMPANY'S SPECIFICATION.

2. ALL ACTIVE SECURITY EQUIPMENT, CABLING, INSTALLATION, TERMINATION AND TESTING BY THE SECURITY CONTRACTOR, UON.

3. ALL SECURITY CABLING SHALL BE INSTALLED IN 3/4" CONDUIT MINIMUM AND BE CONCEALED. VERIFY WITH PLANS OR SECURITY CONTRACTOR WHERE LARGER CONDUITS ARE REQUIRED.

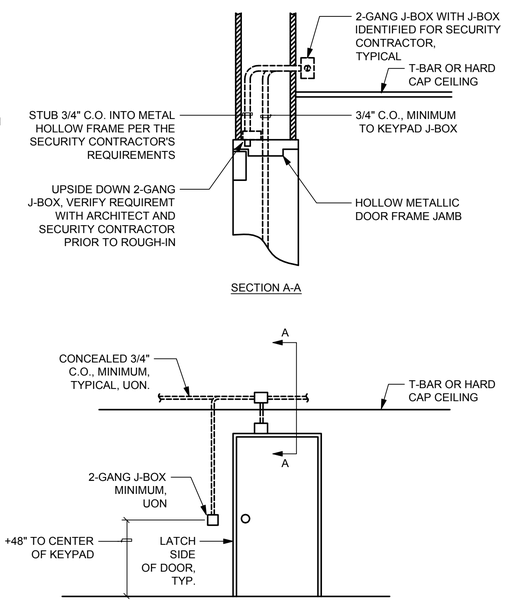

5 ROUGH-IN FOR SECURITY, TYPICAL

SCALE: NONE

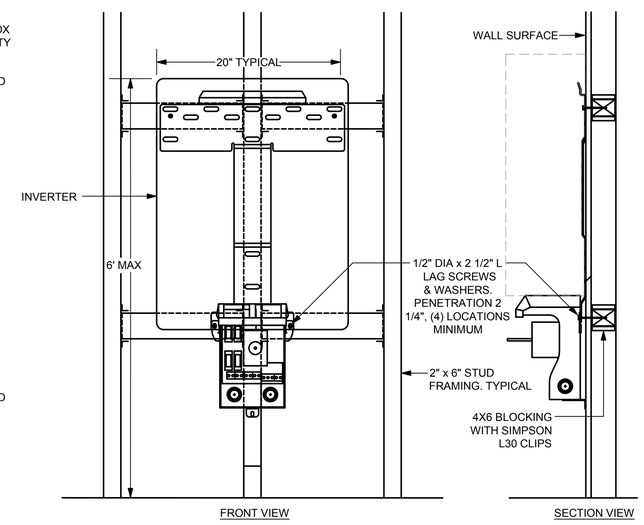

DETAIL NOTES:

1. ALL BLOCKING SHALL BE PREDRILLED TO PREVENT SPLITTING.
2. SINGLE LEVEL 6' MAXIMUM. MAY BE DOUBLE STACKED HIGH. SEE PLAN.
3. MAXIMUM WEIGHT OF INVERTER IS 152 LBS.

3 INVERTER MOUNTING DETAIL

NOT TO SCALE

Project Title:

City of Cupertino - McClellan Ranch Preserve Environmental Education Center Re-Bid

Design Firm:
SIEGEL & STRAIN Architects
1295 59th Street
Emeryville, CA 94608
510 / 547-8092
FAX 510 / 547-2604
info@siegelstrain.com

Consultant:
INTEGRAL GROUP
1084 Foxworthy Avenue
Suite 150
San Jose, CA 95118
408 448-6300
408 448-6301 fax
www.integralgroup.com

Stamp:

No.	Description	Date

Issue Note:
CONSTRUCTION DOCUMENTS 100%
01/10/2014

Project ID:	11-020
File Name:	JSWB-A-00.rvt
Drawn by:	Ben Buschmann
Checked by:	David Maino
Plot Date:	01/08/2014
Scale:	

Sheet Title:
DETAILS

Sheet No.:
E0-7.2

CERTIFICATE OF COMPLIANCE (Page 1 of 4) LTG-1C

Project Name McClellan Ranch Preserve Enviomental Education Center		Date 3/15/2013	
Project Address 2227 McClellan Rd Cupertino, CA 95014	Climate Zone: 3	Building Conditioned Floor Area (sqft)	1788
		Unconditioned Floor Area (sqft)	0

General Information

Building Type:	Nonresidential	High-Rise Residential	Hotel/Motel Guest Room
Schools	Relocatable Public Schools	Conditioned Spaces	Unconditioned Spaces
Phase of Construction:	New Construction	Addition	Alteration
Method of Compliance:	(●) Complete Building	(●) Area Category	(●) Tailored

Document Author's Declaration Statement

- I certify that this Certificate of Compliance documentation is accurate and complete.

Name David Kaneda	Signature
Company Integrated Design Associates Incorporated	Date 3/15/2013
Address 1084 Foxworthy Avenue, Suite 150	CEA # CEPE #
City/State/Zip San Jose / CA / 95118	Phone: (408) 448-6300

Principal Lighting Designer's Declaration Statement

- I am eligible under Division 3 of the California Business and Professions Code to accept responsibility for the lighting design.
- This Certificate of Compliance identifies the lighting features and performance specifications required for compliance with Title 24, Pages 1 and 6 of the California Code of Regulations.
- The design features represented on this Certificate of Compliance are consistent with the information provided to document this design on the other applicable compliance forms, worksheets, calculations, plans and specifications submitted to the enforcement agency for approval with this building permit application.

Name David Kaneda	Signature
Company Integrated Design Associates Incorporated	Phone: (408) 448-6300
Address 1084 Foxworthy Avenue, Suite 150	License # E14003
City/State/Zip San Jose / CA / 95118	Date 3/15/2013

Lighting Mandatory Measures
Indicate location on building plans of Mandatory Measures Note Block: Sheet E8.0

LIGHTING COMPLIANCE FORMS & WORKSHEETS (check box if worksheet is included)

For detailed instructions on the use of this and all Energy Efficiency Standards compliance forms, please refer to the Nonresidential Manual published by the California Energy Commission.

☑	LTG-1C Pages 1 through 4	Certificate of Compliance. All Pages required on plans for all submittals.
☐	LTG-2C Pages 1 through 0	Lighting Controls Credit Worksheet
☑	LTG-3C Pages 1 through 1	Indoor Lighting Power Allowance
☐	LTG-4C Pages 1 through 4	Tailored Method Worksheet
☐	LTG-5C Pages 1 through 2	Line Voltage Track Lighting Worksheet

CERTIFICATE OF COMPLIANCE (Page 2 of 4) LTG-1C

INDOOR LIGHTING SCHEDULE AND FIELD INSPECTION ENERGY CHECKLIST

Project Name: McClellan Ranch Preserve Enviomental Education Center	Date: 3/15/2013

Installation Certificate, LTG-1-INST (Retain a copy and verify form is completed and signed.)	Field Inspector
Certificate of Acceptance, LTG-2A (Retain a copy and verify form is completed and signed.)	Field Inspector

A separate Lighting Schedule Must Be Filled Out for Conditioned and Unconditioned Spaces
Installed Lighting Power listed on this Lighting Schedule is only for:

CONDITIONED SPACES UNCONDITIONED SPACES

The actual indoor lighting power listed below includes all installed permanent and portable lighting systems in accordance with §146(a)

Only for offices: Up to the first 0.2 watts per square foot of portable lighting shall not be required to be included in the calculation of actual indoor lighting power density in accordance with the Exception to §146(a). Therefore, entries below for any office include all portable lighting in excess of 0.2 watts per square foot.

Luminaire (Type, Lamps, Ballast(s)			Installed Watts						
A	B	C	D	E		F	G	H	
Name or Item Tag	Complete Luminaire Description (i.e, 3 lamp fluorescent troffer, F32T8, one dimmable electronic ballasts)	Special Features	Watts per Luminaire1	How wattage was determined: CEC Default from NA8	How wattage was determined: According to §130 (d or e)	Number of Luminaires	Installed Watts (C x F)	Field Inspector2: Pass	Field Inspector2: Fail
A1	PENDANT	0	62	0	0	11	682		
A1EM	PENDANT	0	62	0	0	5	310		
B1	SURFACE	0	32	0	0	4	128		
B1EM	SURFACE	0	32	0	0	3	96		
B2	WALL	0	32	0	0	1	32		
P1	PENDANT	0	42	0	0	4	168		
					INSTALLED WATTS PAGE TOTAL:		1416		
					Building total number of pages	1	Installed Watts Building Total (All conditioned pages)	1416	

Enter into LTG-1C Page 4 of 4

1. Wattage shall be determined according to Section 130(d and e). Wattage shall be rating of light fixture, not rating of bulb.
2. If Fail then describe on Page 2 of the Inspection Checklist Form and take appropriate action to correct. Verify building plans if necessary.

CERTIFICATE OF COMPLIANCE (Page 3 of 4) LTG-1C

Project Name McClellan Ranch Preserve Enviomental Education Center	Date 3/15/2013

INDOOR LIGHTING SCHEDULE and FIELD INSPECTION ENERGY CHECKLIST

Fill in controls for all spaces: a) area controls, b) multi-level controls, c) manual daylighting controls for daylit areas > 250 ft2, automatic daylighting controls for daylit areas > 2,500 ft2, d) shut-off controls, e) display lighting controls, f) tailored lighting controls - general lighting controlled separately from display, ornamental and display case lighting and g) demand responsive automatic controls for retail stores > 50,000 ft2, in accordance with Section 131.

MANDATORY LIGHTING CONTROLS - FIELD INSPECTION ENERGY CHECKLIST

Type / Description	Number of Units	Location in Building	Special Features	Field Inspector: Pass	Field Inspector: Fail
SEE DWGS		SEE DWGS			

SPECIAL FEATURES INSPECTION CHECKLIST (See Indoor Lighting Schedules)

The local enforcement agency should pay special attention to the items specified in this checklist. These items require special written justification and documentation, and special verification. The local enforcement agency determines the adequacy of the justification, and may reject a building or design that otherwise complies based on the adequacy of the special justification and documentation submitted.

Field Inspector's Notes or Discrepancies:

Project Title:

City of Cupertino - McClellan Ranch Preserve Environmental Education Center Re-Bid

Design Firm:
SIEGEL & STRAIN Architects
1295 59th Street
Emeryville, CA 94608
510 / 547-8092
FAX 510 / 547-2604
info@siegelstrain.com

Consultant:
INTEGRAL GROUP
1084 Foxworthy Avenue
Suite 150
San Jose, CA 95118
408 448-6300
408 448-6301 fax
www.integralgroup.com

Stamp:

REGISTERED PROFESSIONAL ENGINEER DAVID K. KANEDA E-14003 EXP. 12-31-15 ELECTRICAL STATE OF CALIFORNIA

No.	Description	Date

Issue Note:
CONSTRUCTION DOCUMENTS 100%
01/10/2014

Project ID:	11-020
File Name:	JSWB-A-00.rvt
Drawn by:	Ben Buschmann
Checked by:	David Maino
Plot Date:	01/08/2014
Scale:	

Sheet Title:
TITLE 24

Sheet No.:
E0-8.0

CERTIFICATE OF COMPLIANCE (Page 4 of 4) LTG-1C

Project Name	Date
McClellan Ranch Preserve Enviomental Education Center	3/15/2013

Conditioned and Unconditioned space Lighting must not be combined for compliance

Indoor Lighting Power for Conditioned Spaces			Indoor Lighting Power for Unconditioned Spaces		
	Watts			Watts	
Installed Lighting (from LTG-1C)		1,416	Installed Lighting (from LTG-1C)		0
Lighting Control Credit (from LTG-2C)	-	0	Lighting Control Credit (from LTG-2C)	-	0
Adjusted Installed Lighting Power	=	1,416	Adjusted Installed Lighting Power	=	0
Complies if Installed ≤ Allowed		↕	Complies if Installed ≤ Allowed		↕
Allowed Lighting Power (from LTG-3C)		1,967	Allowed Lighting Power (from LTG-3C)		0

Required Acceptance Tests

Designer:

This form is to be used by the designer and attached to the plans. Listed below is the acceptance test for the Lighting system, LTG-2A. The designer is required to check the acceptance tests and list all control devices serving the building or space shall be certified as meeting the Acceptance Requirements for Code Compliance. If all the lighting system or control of a certain type requires a test, list the different lighting and the number of systems. The NA7 Section in the Appendix of the Nonresidential Reference Appendices Manual describes the test. Since this form will be part of the plans, completion of this section will allow the responsible party to budget for the scope of work appropriately. Forms can be grouped by type of Luminaire controlled.

Enforcement Agency:

Systems Acceptance. Before Occupancy Permit is granted for a newly constructed building or space or when ever new lighting system with controls is installed in the building or space shall be certified as meeting the Acceptance Requirements. The LTG-2A form is not considered a complete form and is not to be accepted by the enforcement agency unless the boxes are checked and/or filled and signed. In addition, a Certificate of Acceptance forms shall be submitted to the enforcement agency that certifies plans, specifications, installation certificates, and operating and maintenance information meet the requirements of §10-103(b) of Title 24 Part 6. The field inspector must receive the properly filled out and signed forms before the building can receive final occupancy. A copy of the LTG-2A for each different lighting luminaire control(s) must be provided to the owner of the building for their records

Luminaires Controlled				LTG-2A
Equipment Requiring Testing	Description	Number of like Controls	Location	Controls and Sensors and Automatic Daylighting Controls Acceptance
Occupancy Sensors	Occupancy Sensor Acceptance	SEE DWGS	SEE DWGS	☑
				☐
				☐
				☐
				☐
				☐
				☐
				☐
				☐
				☐
				☐
				☐
				☐
				☐
				☐
				☐
				☐
				☐

INTERIOR LIGHTING POWER ALLOWANCE (Page 1 of 1) LTG-3C

Project Name	Date
McClellan Ranch Preserve Enviomental Education Center	3/15/2013

ALLOWED LIGHTING POWER (Choose One Method)

A Separate LTG-3C must be filled out for Conditioned and Unconditioned Spaces. Indoor Lighting Power Allowances listed on this page are only for:

CONDITIONED SPACES UNCONDITIONED SPACES

COMPLETE BUILDING METHOD

BUILDING CATEGORY (From § 146 Table 146-E)	WATTS PER (sqft)	COMPLETE BLDG. AREA	ALLOWED WATTS
Classroom building	1.1	1788	1966.8
	TOTALS	1788	1966.8
		AREA	WATTS

AREA CATEGORY METHOD - Part A

A	B	C	D
AREA CATEGORY (From § 146 Table 146-F)	WATTS PER (sqft)	AREA (sqft)	ALLOWED WATTS
Sum of Additional Allowed Watts from Area Category Method – Part B (from table below)			0
	TOTALS	0	0
		AREA	WATTS

AREA CATEGORY METHOD – Part B Additional Wattage Allowance (from Table 146-F Footnotes)

A	B	C 1	D	E	F	G
Primary Function	Sq Ft	Additional Watts Per ft2 Allowed	Wattage Allowance (B x C)	Description(s) and Quantity of Special Luminaire 2 Types in each Primary Function Area	Total Design Watts	ALLOWED WATTS Smaller of D or F
TOTALS – Enter into Area Category Method – Part A (table above)						0

1. Additional watts available only when allowed according to the footnotes on bottom of Table 146-F for chandelier or sconce; art, craft, assembly or manufacturing specialized task work; precision commercial/ industrial work; or lab specialized task work. 2. Special luminaires are light fixtures described in the Table 146-F Footnotes that are subject to an additional wattage allowance.

TAILORED METHOD

Total Allowed Watts using the Tailored Method taken from LTG-4C (Page 1 of 4) Row 3

The indoor lighting power allowance using the Tailored Method of compliance shall be determined using the LTG-4C set of forms. A separate set of LTG-4C forms shall be filled out for CONDITIONED and UNCONDITIONED spaces

INTERIOR LIGHTING MANDATORY MEASURES

☑ § 131 (d)1 - BUILDING LIGHTING SHUT-OFF:
For every floor, all interior lighting systems shall be equipped with a separate automatic control to shut off the lighting.

☑ § 131 (d)2 - OVERRIDE FOR AUTOMATIC LIGHTING SHUT-OFF:
The automatic building shut-off system is provided with a manual, accessible override switch in sight of the lights. The area of override is not to exceed 5,000 square feet.

☑ § 119 (h) - AUTOMATIC CONTROL DEVICES CERTIFIED:
All automatic control devices specified are certified, all alternate equipment shall be certified and installed as directed by the manufacturer.

☑ § 111 - FLUORESCENT BALLASTS AND LUMINAIRES CERTIFIED:
All fluorescent fixtures specified for the project are subject to certification. All installed fixtures shall be certified.

☑ § 131 (a) - INDIVIDUAL ROOM/AREA CONTROLS:
Each room and area in this building is equipped with a separate switch or occupancy sensor device for each area with floor-to-ceiling walls.

☑ § 131 (b) - UNIFORM REDUCTION FOR INDIVIDUAL ROOMS:
All rooms and areas greater than 100 square feet and more than 0.8 watts per square foot of lighting load shall be controlled with bi-level switching for uniform reduction of lighting within the room.

☑ § 131 (c) - DAYLIT AREA CONTROL:
All rooms with windows and skylights that are greater than 250 square feet, and that allow for the effective use of daylight in the area shall have 50% of the lamps in each daylit area controlled by a separate switch; or the effective use of daylight cannot be accomplished because the windows are continuosly shaded by a building on the adjacent lot.

☑ § 131 (e) - DISPLAY LIGHTING:
Display lighting shall be seperatly switched on circuits that are 20 amps or less.

Project Title:

City of Cupertino - McClellan Ranch Preserve
Environmental Education Center
Re-Bid

Design Firm:
SIEGEL & STRAIN Architects
1295 59th Street
Emeryville, CA 94608
510 / 547-8092
FAX 510 / 547-2604
info@siegelstrain.com

Consultant:
INTEGRAL GROUP
1084 Foxworthy Avenue
Suite 150
San Jose, CA 95118
408 448-6300
408 448-6301 fax
www.integralgroup.com

Stamp:

REGISTERED PROFESSIONAL ENGINEER
DAVID K. KANEDA
E 14003
EXP. 6-30-14
ELECTRICAL
STATE OF CALIFORNIA

No.	Description	Date

Issue Note:
CONSTRUCTION DOCUMENTS 100%
01/10/2014

Project ID:	11-020
File Name:	JSWB-A-00.rvt
Drawn by:	Ben Buschmann
Checked by:	David Maino
Plot Date:	01/08/2014
Scale:	

Sheet Title:

TITLE 24

Sheet No.:

E0-8.1

CERTIFICATE OF COMPLIANCE (Page 1 of 4) OLTG-1C

Project Name McClellan Ranch Preserve Enviomental Education Center	Date 3/15/2013
Project Address 2227 McClellan Rd Cupertino, CA 95014	Total Illuminated Area 229

General Information

Phase of Construction: New Construction Addition Alteration

Document Author's Declaration Statement

• I certify that this Certificate of Compliance documentation is accurate and complete.

Name David Kaneda	Signature
Company Integrated Design Associates Incorperated	Date 3/15/2013
Address 1084 Foxworthy Avenue, Suite 150	EA # CEPE # E14003
City/State/Zip San Jose / CA / 95118	Phone: (408) 448-6300

Principal Lighting Designer's Declaration Statement

• I am eligible under Division 3 of the California Business and Professions Code to accept responsibility for the lighting design.

• This Certificate of Compliance identifies the lighting features and performance specifications required for compliance with Title 24, Pages 1 and 6 of the California Code of Regulations.

• The design features represented on this Certificate of Compliance are consistent with the information provided to document this design on the other applicable compliance forms, worksheets, calculations, plans and specifications submitted to the enforcement agency for approval with this building permit application.

Name David Kaneda	Signature
Company Integrated Design Associates Incorperated	Phone: (408) 448-6300
Address 1084 Foxworthy Avenue, Suite 150	License # E14003
City/State/Zip San Jose / CA / 95118	Date 3/15/2013

Principal Lighting Designer's Declaration

I certify that this Certificate of Compliance documentation is accurate and complete, and accounts for all outdoor lighting power, including building mounted, pole mounted, as well as all other outdoor lighting designed for the site, and that Additional Lighting Power Allowances for Specific Applications or Additional Lighting Power Allowances for Ordinance Requirements have not been counted more than one time for the same area, in accordance with Section 147 of the Standards.

Outdoor Lighting Mandatory Measures
Indicate location on building plans of Mandatory Measures Note Block: Sheet E8.1

LIGHTING COMPLIANCE FORMS & WORKSHEETS (check box if worksheet is included)

For detailed instructions on the use of this and all Energy Efficiency Standards compliance forms, please refer to the Nonresidential Manual published by the California Energy Commission.

OLTG-1C	Certificate of Compliance. All 3 pages required on plans for all submittals.
OLTG-2C	(Page 1 of 3) Lighting Wattage Allowances for General Hardscape, Sales Frontage, or Ornamental Lighting. Optional on plans.
OLTG-2C	(Page 2 of 3) Lighting Wattage Allowances for Per Application or Per Area. Optional on plans.
OLTG-2C	(Page 3 of 3) Additional Lighting Power Allowance for Ordinance Requirements. Optional on plans.

FIELD INSPECTION ENERGY (Page 2 of 4) OLTG-1C

COMPLIANCE FIXTURE / LIGHTING CONTROL SCHEDULE and FIELD INSPECTION CHECKLIST

Project Name McClellan Ranch Preserve Enviomental Education Center	Date 3/15/2013

INSTALLATION CERTIFICATE, OLTG-1-INST (Retain a copy and verify form is completed and signed.)	Field Inspection
CERTIFICATE OF ACCEPTANCE, OLTG-2A (Retain a copy and verify form is completed and signed.)	Field Inspection

Luminaire Schedule			Installed Watts							
A	B	C	D	E	F		G	H	I	
					☐☐ How wattage was determined				Field Inspector2	
Name Or Item Tag	Luminaire Description 1 See footnote below (i.e.: 1 lamp pole-top shoe-box 400 watt metal halide)	Cutoff Designation	Watts per Luminaire	Special Features	CEC Default from NA-8	According to §130(d or e)	Number of Luminaires	Installed Watts (D x G)	Pass	Fail
ZA	CFL WALL PACK		13				3	39		
ZAEM	CFL WALL PACK		13				3	39		
ZB	CFL PENDANT		26				4	104		
ZC	CFL PENDANT		18				1	18		
P2	CFL WALL MOUNT		42				2	84		
ZD	BOLLARD		15.4				7	107.8		
								0		
	Enter total into OLTG-1C; Page 4 of 4; Row H; Total Installed Watts:							391.8		

1. Type of luminaire (i.e.: post top, wall pack, surface, shoe box); for non-incandescent luminaires, indicate nominal lamp wattage and lamp type (i.e.: fluorescent, incandescent, HID); ballast type (i.e.: electronic or magnetic); number of lamps and number of ballasts per luminaire. For incandescent luminaires, the luminaire wattage listed in column D shall be the maximum relamping rated wattage on a permanent factory-installed label on the luminaire, NOT the wattage of the lamp (bulb) used, in accordance with Section 130(d or e).
2. If Fail then describe on Page 2 of the Inspection Checklist Form and take appropriate action to correct. Verify building plans if necessary.

EXEMPT LUMINAIRES	Field Inspection
Name or Symbol	Description of exempt luminaires in accordance with §147

MANDATORY CONTROLS					Field Inspection	
#	Description	Location		#	Description	Location

SPECIAL FEATURES INSPECTION CHECKLIST (See Page 2 of 4 of OLTG-1C)

The local enforcement agency should pay special attention to the items specified in this checklist. These items require special written justification and documentation, and special verification. The local enforcement agency determines the adequacy of the justification, and may reject a building or design that otherwise complies based on the adequacy of the special justification and documentation submitted.

Filed Inspector Notes or Discrepancies:

CERTIFICATE OF COMPLIANCE (Page 3 of 4) OLTG-1C

Project Name McClellan Ranch Preserve Enviomental Education Center	Date 3/15/2013

A. OUTDOOR LIGHTING ZONE

OUTDOOR LIGHTING ZONE: OLZ 1 OLZ 2 OLZ 3 OLZ 4

Is the Outdoor Lighting Zone: Default in accordance with §10-114, or Amended by JHA

Complete the information below if the default Outdoor Lighting Zone has been amended by the local jurisdiction having authority (JHA):

The site is a government designated park, recreation area, wildlife preserve, or portion thereof, and has been designated as LZ2 or LZ3, in accordance with Table 10-114-A, because the site is contained within such a zone.

The local jurisdiction having authority has officially adopted a change to the State Default Lighting Zone and has notified the Energy Commission by providing the materials required in §10-114(d) to the Executive Director.

The adopted change is posted on the Energy Commission website.

B. ADDITIONAL LIGHTING POWER ALLOWANCE FOR ORDINANCE REQUIREMENTS

Are additional lighting power allowances for ordinance in Table 147-C used? Yes No

Complete the information below if additional lighting power allowances for ordinance requirements are used:

The local jurisdiction having authority has officially adopted specific outdoor light levels, which are expressed as average or minimum footcandle levels, by following a public process that allowed for formal public notification, review, and comment about the proposed change.

The local jurisdiction having authority which adopted specific outdoor light levels and has notified the Commission by providing the following materials required §10-114(f) to the Executive Director.

C. ACCEPTANCE FORMS

Required Acceptance Tests

Designer:

This form is to be used by the designer and attached to the plans. Listed below is the acceptance test for the Lighting system, LTG-2A. The designer is required to check the acceptance tests and list all control devices serving the building or space shall be certified as meeting the Acceptance Requirements for Code Compliance. If all the lighting system or control of a certain type requires a test, list the different lighting and the number of systems. The NA7 Section in the Appendix of the Nonresidential Reference Appendices Manual describes the test. Since this form will be part of the plans, completion of this section will allow the responsible party to budget for the scope of work appropriately. Forms can be grouped by type of Luminaire controlled.

Enforcement Agency:

Systems Acceptance. Before Occupancy Permit is granted for a newly constructed building or space or when ever new lighting system with controls is installed in the building or space shall be certified as meeting the Acceptance Requirements. The LTG-2A form is not considered a complete form and is not to be accepted by the enforcement agency unless the boxes are checked and/or filled and signed. In addition, a Certificate of Acceptance forms shall be submitted to the enforcement agency that certifies plans, specifications, installation certificates, and operating and maintenance information meet the requirements of §10-103(b) of Title 24 Part 6. The field inspector must receive the properly filled out and signed forms before the building can receive final occupancy. A copy of the LTG-2A for each different lighting luminaire control(s) must be provided to the owner of the building for their records.

Certificate of Acceptance

	Luminaires Controlled			OLTG-2A1
Equipment Requiring Testing	Description	Number of Like Controls	Location	Outdoor Lighting Acceptance Tests

1. Insert: OMS for Outdoor Motion Sensor; OLSC for Outdoor Lighting Shutoff Controls; OP for Outdoor Photocontrol; ATS for Astronomical Time Switch; and, STS for Standard (non-astronomical) Time Switch acceptance.

Project Title:

City of Cupertino - McClellan Ranch Preserve Environmental Education Center Re-Bid

Design Firm:
SIEGEL & STRAIN Architects
1295 59th Street
Emeryville, CA 94608
510 / 547-8092
FAX 510 / 547-2604
info@siegelstrain.com

Consultant:
INTEGRAL GROUP
1084 Foxworthy Avenue
Suite 150
San Jose, CA 95118
408 448-6300
408 448-6301 fax
www.integralgroup.com

Stamp:

REGISTERED PROFESSIONAL ENGINEER DAVID K. KANEDA E-14003 EXP. 12-31-14 ELECTRICAL STATE OF CALIFORNIA

No.	Description	Date

Issue Note:
CONSTRUCTION DOCUMENTS 100%
01/10/2014

Project ID:	11-020
File Name:	JSWB-A-00.rvt
Drawn by:	Ben Buschmann
Checked by:	David Maino
Plot Date:	01/08/2014
Scale:	

Sheet Title:
EXTERIOR TITLE 24

Sheet No.:
E0-8.2

CERTIFICATE OF COMPLIANCE (Page 4 of 4) OLTG-1C

Project Name	Date
McClellan Ranch Preserve Enviomental Education Center	3/15/2013

ALLOWED AND INSTALLED OUTDOOR LIGHTING POWER

		Lighting Wattage Power Allowance	
A	Lighting power allowance for general hardscape (from OLTG-2C Page 1 of 3)	901	
B	Specific application lighting wattage allowance per unit length (from OLTG-2C Page 1 of 3)		
C	Specific application wattage allowance for ornamental lighting (from OLTG-2C Page 1 of 3)		
D	Specific application wattage allowance per application (from OLTG-2C Page 2 of 3)		
E	Specific application lighting wattage allowance per area (from OLTG-2C Page 2 of 3)		
F	Additional lighting power allowance for ordinance requirements (from OLTG-2C Page 3 of 3)		
G	Total Allowed Wattage = Sum of rows A through G:	901	
H	Total installed watts (from Compliance Fixture Schedule, (from OLTG-1C Page 2 of 4)	412	
	Complies if wattage in row H is less than or equal to the wattage in row G	Yes	No

EXTERIOR LIGHTING MANDATORY MEASURES

- ☑ § 130 (c) 1 - LUMINAIRE POWER:
  The wattage of incandescent or tungsten-halogen luminaires with medium screw base sockets and not containing permanently installed ballasts shall be the maxium relamping rated wattage of the luminaire , as listed on a permanent factory-installed label specified by UL 1598.
- ☑ § 119 (h) - AUTOMATIC CONTROL DEVICES CERTIFIED:
  All automatic control devices specified are certified, all alternate equipment shall be certified and installed as directed by the manufacturer.
- ☑ § 111 - FLUORESCENT BALLASTS AND LUMINAIRES CERTIFIED:
  All fluorescent fixtures specified for the project are subject to certification. All installed fixtures shall be certified.
- ☑ § 132 (a) - LAMP EFFICACY REQUIREMENT:
  All permanently installed luminaires with lamps rated over 100 watts either have a lamp efficacy of at least 60 lumens per watt or are controlled by a motion sensor.
- ☑ § 132 (b) - LUMINAIRE CUTOFF REQUIREMENTS:
  All luminaires with lamps rated greater than 175 watts in hardscape areas, including parking lots, building entrances, canopies and all outdoor sales areas meet cutoff requirements.
- ☑ § 132 (c) 1 - CONTROL OF EXTERIOR LIGHTS:
  All permanently installed exterior fixtures are controlled by an astronomical time clock or a photocontrol that automatically turns off outdoor lighting when daylight is available.
- ☑ § 132 (c) 2 - MULTI-LEVEL SWITCHING REQUIREMENT:
  An automatic time clock must be installed for exterior lighting for building facades, parking lots, garages, canopies and outdoor sales areas where two or more luminaires are used such that it reduces the lighting power by at least 50% when it is not needed.

CERTIFICATE OF COMPLIANCE (Page 1 of 3) LTG-2C

Project Name	Date
McClellan Ranch Preserve Enviomental Education Center	3/15/2013

A. LIGHTING POWER ALLOWANCE FOR GENERAL HARDSCAPE

AREA WATTAGE ALLOWANCE (AWA)			LINEAR WATTAGE ALLOWANCE (LWA)			INITIAL WATTAGE ALLOWANCE	TOTAL GENERAL HARDSCAPE LIGHTING ALLOWANCE
A	B	C	D	E	F	G	H
ILLUMINATED HARDSCAPE AREA	AWA PER SQUARE FOOT	AWA (A X B)	PERIMETER LENGTH OF GENERAL HARDSCAPE	LWA PER LINEAR FOOT	LWA (D X E)	IWA (WATTS)	C + F + G
229	0.092	21	120	0.92	110	770	901
Enter total into OLTG-1C; Page 4 of 4; Row A; Lighting Power Allowance for General Hardscape:							901

Yes: AWA, LWA, and IWA from Table 147-A was used as appropriate for the Outdoor Lighting Zone

B. SPECIFIC APPLICATION LIGHTING WATTAGE ALLOWANCE PER UNIT LENGTH (Available only for sales frontage)

DETERMINE WATTAGE ALLOWANCE				LUMINAIRE TYPE		DESIGN WATTS			
A	B	C	D	E	F	G	H	I	J
Specific Lighting Application	Linear Feet of Frontage	Sales Frontage allowance for OLZ (watts per lft)	Wattage Allowance (B x C)	Name or Symbol	Luminaire Type	Luminaire Quantity	Watts per Luminaire	Design Watts (G x H)	Allowed Watts Minimum of D or I
Outdoor Sales Frontage									
Enter total into OLTG-1C; Page 4 of 4; Row B; Specific Application Lighting Wattage Allowance Per Unit Length									

C. SPECIFIC APPLICATION WATTAGE ALLOWANCE FOR ORNAMENTAL LIGHTING

DETERMINE WATTAGE ALLOWANCE				LUMINAIRE TYPE		DESIGN WATTS			
A	B	C	D	E	F	G	H	I	J
Specific Lighting Application	Square feet of Hardscape	Ornamental Lighting Allowance for OLZ (watts per ft2)	Wattage Allowance (B x C)	Name or Symbol	Luminaire Type	Luminaire Quantity	Watts per Luminaire	Design Watts (G x H)	Allowed Watts Minimum of D or I
Hardscape Ornamental Lighting									
Enter total into OLTG-1C; Page 4 of 4; Row C: Specific Application Wattage Allowance for Ornamental Lighting									

Project Title:

City of Cupertino - McClellan Ranch Preserve Environmental Education Center Re-Bid

Design Firm:
SIEGEL & STRAIN Architects
1295 59th Street
Emeryville, CA 94608
510 / 547-8092
FAX 510 / 547-2604
info@siegelstrain.com

Consultant:
INTEGRAL GROUP
1084 Foxworthy Avenue
Suite 150
San Jose, CA 95118
408 448-6300
408 448-6301 fax
www.integralgroup.com

Stamp:

REGISTERED PROFESSIONAL ENGINEER DAVID K. KANOUSE E-14002 EXP. 12-30-14 ELECTRICAL STATE OF CALIFORNIA

No.	Description	Date

Issue Note:
CONSTRUCTION DOCUMENTS 100% 01/10/2014

Project ID:	11-020
File Name:	JSWB-A-00.rvt
Drawn by:	Ben Buschmann
Checked by:	David Maino
Plot Date:	01/08/2014
Scale:	

Sheet Title:
EXTERIOR TITLE 24

Sheet No.:
E0-8.3

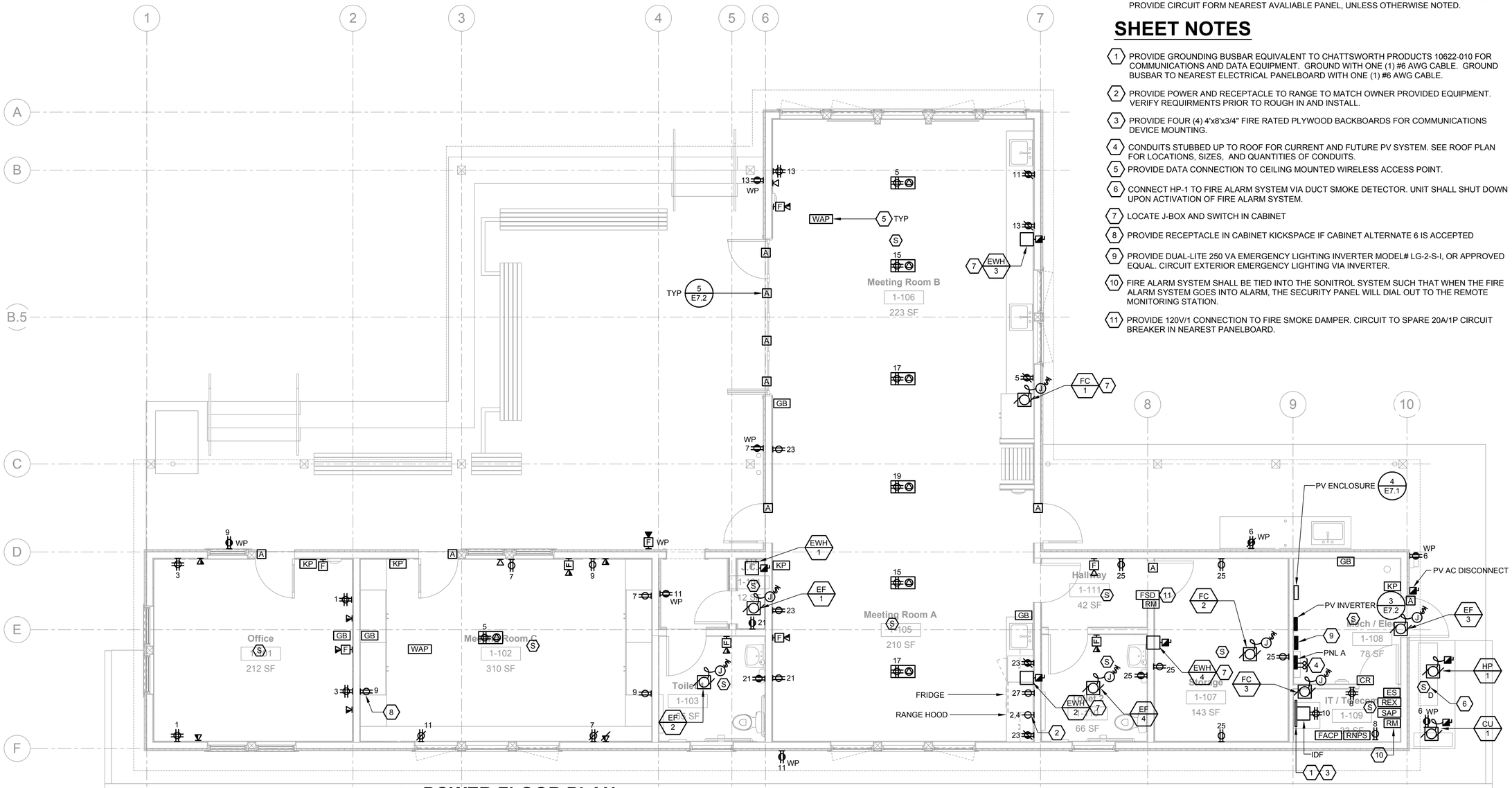

1 POWER FLOOR PLAN

1/4" - 1'-0"

4 0 4 8

SCALE OF FEET

GENERAL NOTES

1. COORDINATE EXACT LOCATIONS OF ALL ARCHITECTURAL, MECHANICAL AND PLUMBING EQUIPMENT WITH ARCHITECTURAL, MECHANICAL AND PLUMBING DRAWINGS.
2. CIRCUIT ALL DEVICES ON THIS SHEET TO PANELBOARD PNL-A, UNLESS OTHERWISE NOTED.
3. SIZE FUSES FOR ALL MECHANICAL AND PLUMBING EQUIPMENT PER MANUFACTURER'S RECOMMENDATIONS.
4. IN FINISHED INTERIOR AREAS, RUN ALL CONDUITS CONCEALED, UNLESS OTHERWISE NOTED. PAINT ALL EXPOSED CONDUITS AND ELECTRICAL EQUIPMENT. REFER TO ARCHITECTS PAINTING SECTION FOR REQUIREMENTS.
5. SEE EQUIPMENT SCHEDULE ELECTRICAL REQUIREMENTS FOR CIRCUITING OF EQUIPMENT AND REFER TO RISER DIAGRAMS AND DETAILS FOR ADDITIONAL INFORMATION ON WIRING, LAYOUT AND CONNECTIONS. SEE MECHANICAL AND PLUMBING DRAWINGS FOR ADDITIONAL INFORMATION.
6. PROVIDE POWER 120V/24V TRANSFORMER AS REQUIRED TO POWER VAV/BY-PASS DAMPERS, RESTROOM PLUMBING CONTROLS, DUCT SMOKE DETECTORS, MAGNETIC DOOR HOLDERS AND FIRE SMOKE DAMPERS FOR MECHANICAL EQUIPMENT. SEE DIAGRAMS ON MECHANICAL AND PLUMBING DRAWINGS FOR CONNECTION TO MECHANICAL AND PLUMBING EQUIPMENT. PROVIDE CIRCUIT FORM NEAREST AVALIABLE PANEL, UNLESS OTHERWISE NOTED.

SHEET NOTES

1. PROVIDE GROUNDING BUSBAR EQUIVALENT TO CHATTSWORTH PRODUCTS 10622-010 FOR COMMUNICATIONS AND DATA EQUIPMENT. GROUND WITH ONE (1) #6 AWG CABLE. GROUND BUSBAR TO NEAREST ELECTRICAL PANELBOARD WITH ONE (1) #6 AWG CABLE.
2. PROVIDE POWER AND RECEPTACLE TO RANGE TO MATCH OWNER PROVIDED EQUIPMENT. VERIFY REQUIRMENTS PRIOR TO ROUGH IN AND INSTALL.
3. PROVIDE FOUR (4) 4'x8'x3/4" FIRE RATED PLYWOOD BACKBOARDS FOR COMMUNICATIONS DEVICE MOUNTING.
4. CONDUITS STUBBED UP TO ROOF FOR CURRENT AND FUTURE PV SYSTEM. SEE ROOF PLAN FOR LOCATIONS, SIZES, AND QUANTITIES OF CONDUITS.
5. PROVIDE DATA CONNECTION TO CEILING MOUNTED WIRELESS ACCESS POINT.
6. CONNECT HP-1 TO FIRE ALARM SYSTEM VIA DUCT SMOKE DETECTOR. UNIT SHALL SHUT DOWN UPON ACTIVATION OF FIRE ALARM SYSTEM.
7. LOCATE J-BOX AND SWITCH IN CABINET
8. PROVIDE RECEPTACLE IN CABINET KICKSPACE IF CABINET ALTERNATE 6 IS ACCEPTED
9. PROVIDE DUAL-LITE 250 VA EMERGENCY LIGHTING INVERTER MODEL# LG-2-S-I, OR APPROVED EQUAL. CIRCUIT EXTERIOR EMERGENCY LIGHTING VIA INVERTER.
10. FIRE ALARM SYSTEM SHALL BE TIED INTO THE SONITROL SYSTEM SUCH THAT WHEN THE FIRE ALARM SYSTEM GOES INTO ALARM, THE SECURITY PANEL WILL DIAL OUT TO THE REMOTE MONITORING STATION.
11. PROVIDE 120V/1 CONNECTION TO FIRE SMOKE DAMPER. CIRCUIT TO SPARE 20A/1P CIRCUIT BREAKER IN NEAREST PANELBOARD.

Project Title:

City of Cupertino - McClellan Ranch Preserve
Environmental Education Center
Re-Bid

Design Firm:
SIEGEL & STRAIN Architects
1295 59th Street
Emeryville, CA 94608
510 / 547-8092
FAX 510 / 547-2604
info@siegelstrain.com

Consultant:
INTEGRAL GROUP
1084 Foxworthy Avenue
Suite 150
San Jose, CA 95118
408 448-6300
408 448-6301 fax
www.integralgroup.com

Stamp:

REGISTERED PROFESSIONAL ENGINEER
DAVID K. KANEDA
E 14003
EXP. 06-30-14
ELECTRICAL
STATE OF CALIFORNIA

No.	Description	Date

Issue Note:
CONSTRUCTION DOCUMENTS 100%
01/10/2014

Project ID:	11-020
File Name:	JSWB-A-00.rvt
Drawn by:	Ben Buschmann
Checked by:	David Maino
Plot Date:	01/08/2014
Scale:	

Sheet Title:
POWER FLOOR PLAN

Sheet No.:
E1-2.0

GENERAL NOTES

1. COORDINATE EXACT LOCATIONS OF ALL ARCHITECTURAL, MECHANICAL AND PLUMBING EQUIPMENT WITH ARCHITECTURAL, MECHANICAL AND PLUMBING DRAWINGS.
2. SIZE FUSES FOR ALL MECHANICAL AND PLUMBING EQUIPMENT PER MANUFACTURER'S RECOMMENDATIONS.
3. IN FINISHED INTERIOR AREAS, RUN ALL CONDUITS CONCEALED, UNLESS OTHERWISE NOTED. PAINT ALL EXPOSED CONDUITS AND ELECTRICAL EQUIPMENT. REFER TO ARCHITECTS PAINTING SECTION FOR REQUIREMENTS.
4. SEE EQUIPMENT SCHEDULE ELECTRICAL REQUIREMENTS FOR CIRCUITING OF EQUIPMENT AND REFER TO RISER DIAGRAMS AND DETAILS FOR ADDITIONAL INFORMATION ON WIRING, LAYOUT AND CONNECTIONS. SEE MECHANICAL AND PLUMBING DRAWINGS FOR ADDITIONAL INFORMATION.
5. REFER TO SINGLE LINE DIAGRAM FOR ALL WIRING SIZES AND QTY.
6. FOR ALL CONDUIT STUB UPS FOR THE FUTURE PV SYSTEM, CONTRACTOR SHALL PROVIDE WEATHERPROOF CAPS AND ALL PARTS AND PIECES NECESSARY TO MAKE THE STUB UPS WEATHERPROOF.

SHEET NOTES

1. PHOTOVOLTAIC MODULE. SEE SINGLE LINE DIAGRAM FOR MORE INFORMATION.
2. RUN PV STRING WIRING, CONCEALED UNDER PV MODULES AND RACK SYSTEM, TO COMBINER BOX(ES) OR PULL BOX(ES).
3. PV COMBINER BOX MOUNTED TO ROOF. INSTALL COMBINER BOX PER THE MANUFACTURER'S SPECIFICATIONS AND INSTALLATION GUIDE.
4. (1) 1" CONDUIT STUBBED FROM COMBINER BOX OR PULL BOX TO A LOCATION THAT IS CONCEALED AND DIRECTLY UNDER THE PV MODULES AND RACK SYSTEM. PROVIDE WEATHERPROOF CAULKING OR PUTTY AT END OF CONDUIT PER COMBINER BOX'S OR PER PULL BOX'S SPECIFICATIONS AND INSTALLATION MANUAL.
5. BOX INDICATES THE BEGINNING OF A STRING OF PV PANELS. SEE SINGLE LINE DIAGRAM FOR ADDITIONAL INFORMATION.
6. 4"X4"X4" NEMA 4 WEATHERPROOF PULL BOX WITH FULLY GASKETED HINGED LOCKABLE DOOR FOR SIGNAL CONCEALED UNDER THE PV RACKING SYSTEM. INSTALL BOX PER THE MANUFACTURER'S SPECIFICATIONS AND INSTALLATION GUIDE.
7. FOR EACH PV MODULE LASER ETCH OR ENGRAVE THE MANUFACTURER'S SERIAL NUMBER INTO THE MODULE FRAME.
8. THE CONTRACTOR SHALL PROVIDE A DIAGRAM TO THE OWNER THAT INDICATES EACH PV MODULE'S SERIAL NUMBER AND THE MODULE'S LOCATION IN THE SYSTEM AND ON THE ROOF.
9. TIGO ENERGY GATEWAY. MOUNT GATEWAY TO BACKSIDE OF PV MODULE. PROVIDE ALL NECESSARY MOUNTING HARDWARE AND INSTALL PER MANUFACTURER'S SPECIFICATIONS AND INSTALLATION MANUAL. COORDINATE LOCATION OF GATEWAY WITH FACTORY REPRESENTATIVE PRIOR TO ROUGH-IN. SEE DETAILS FOR MORE INFORMATION.
10. CONDUIT STUBBED FROM SIGNAL PULL BOX TO TIGO ENERGY GATEWAY. ROUTE RS-485 CABLE(S) FROM GATEWAY TO THE TIGO MMU IN THE PV ENCLOSURE IN THE ELECTRICAL ROOM..
11. (1) 1" C., SIGNAL, U.O.N.
12. CONDUIT(S) STUBBED THROUGH ROOF TO ELECTRICAL ROOM OR PV ENCLOSURE. SEE PV SINGLE LINE DIAGRAM FOR MORE INFORMATION.
13. 1-1/2" POWER CONDUIT STUB UP FOR FUTURE PV SYSTEM. CONTRACTOR SHALL ROUTE FROM STUB UP LOCATION A 1-1/2" EMPTY CONDUIT TO THE ELECTRICAL ROOM IN THE BUILDING.
14. CONTRACTOR SHALL COORDINATE EXACT STUB UP LOCATION WITH ARCHITECT AND ELECTRICAL ENGINEER PRIOR TO FINAL ROUGH-IN.
15. 1" SIGNAL CONDUIT STUB UP FOR FUTURE PV SYSTEM. CONTRACTOR SHALL ROUTE FROM STUB UP LOCATION A 1" EMPTY CONDUIT TO THE PV ENCLOSURE IN THE BUILDING.

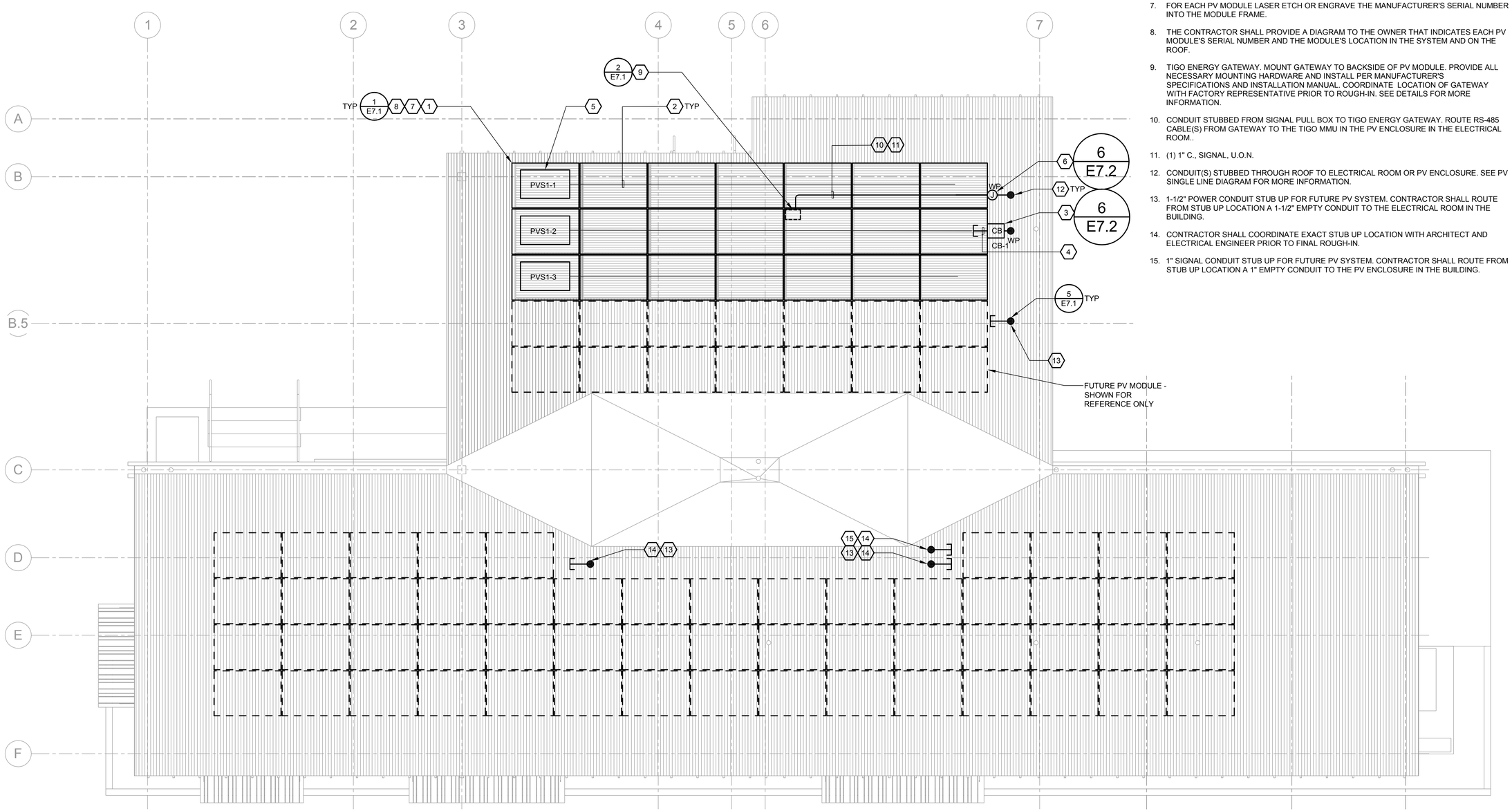

1 **POWER ROOF PLAN**
1/4" - 1'-0"

4 0 4 8
SCALE OF FEET

Project Title:

City of Cupertino - McClellan Ranch Preserve
Environmental Education Center
Re-Bid

Design Firm:
SIEGEL & STRAIN Architects
1295 59th Street
Emeryville, CA 94608
510 / 547-8092
FAX 510 / 547-2604
info@siegelstrain.com

Consultant:
INTEGRAL GROUP
1084 Foxworthy Avenue
Suite 150
San Jose, CA 95118
408 448-6300
408 448-6301 fax
www.integralgroup.com

Stamp:

No.	Description	Date

Issue Note:
CONSTRUCTION DOCUMENTS 100%
01/10/2014

Project ID:	11-020
File Name:	JSWB-A-00.rvt
Drawn by:	Ben Buschmann
Checked by:	David Maino
Plot Date:	01/08/2014
Scale:	

Sheet Title:
POWER ROOF PLAN

Sheet No.:
E1-2.1

LIGHT FIXTURE MOUNTING NOTES

A. ATTACH ALL LIGHT FIXTURES TO THE CEILING GRID RUNNERS TO RESIST A HORIZONTAL FORCE EQUAL TO THE WEIGHT OF THE FIXTURE.

B. FLUSH OR RECESSED LIGHT FIXTURES WEIGHING LESS THAN 56 POUNDS MAY BE SUPPORTED DIRECTLY ON THE RUNNERS OF A HEAVY DUTY GRID SYSTEM BUT, IN ADDITION, THEY MUST HAVE A MINIMUM OF TWO 12 GA SLACK SAFETY WIRES ATTACHED TO THE FIXTURE AT DIAGONAL CORNERS AND ANCHORED TO THE STRUCTURE ABOVE.

C. ALL FLUSH OR RECESSED LIGHT FIXTURES WEIGHING 56 POUNDS OR MORE MUST BE INDEPENDENTLY SUPPORTED BY NOT LESS THAN FOUR TAUT 12 GA WIRES EACH ATTACHED TO THE FIXTURE AND TO THE STRUCTURE ABOVE REGARDLESS OF THE TYPE OF CEILING GRID SYSTEM USED. THE FOUR TAUT 12 GA WIRES, INCLUDING THEIR ATTACHMENT TO THE STRUCTURE ABOVE, MUST BE CAPABLE OF SUPPORTING FOUR TIMES THE WEIGHT OF THE FIXTURE.

D. SUPPORT SURFACE MOUNTED LIGHT FIXTURES BY AT LEAST TWO POSITIVE DEVICES WHICH SURROUND THE CEILING RUNNER AND WHICH ARE EACH SUPPORTED FROM THE STRUCTURE ABOVE BY A 12 GA WIRE. SPRING CLIPS OR CLAMPS THAT CONNECT ONLY TO THE RUNNER ARE NOT ACCEPTABLE. PROVIDE ADDITIONAL SUPPORTS WHEN LIGHT FIXTURES ARE EIGHT FEET OR LONGER.

E. SUPPORT PENDANT MOUNTED LIGHT FIXTURES DIRECTLY FROM THE STRUCTURE ABOVE WITH RODS, HANGER WIRES OR CABLE PASSING THROUGH EACH PENDANT TAB. RODS, HANGER WIRES AND/OR CABLE, SHALL BE CAPABLE OF SUPPORTING FOUR TIMES THE WEIGHT OF THE FIXTURE.

F. REFER TO ARCHITECTURAL REFLECTED CEILING PLANS FOR EXACT LOCATION OF LIGHTING FIXTURES AND GRID COORDINATION. VERIFY THAT ADEQUATE CLEARANCE FOR INSTALLATION, MAINTENANCE AND HEAT DISSIPATION IS AVAILABLE BEFORE ORDERING LIGHTING FIXTURES.

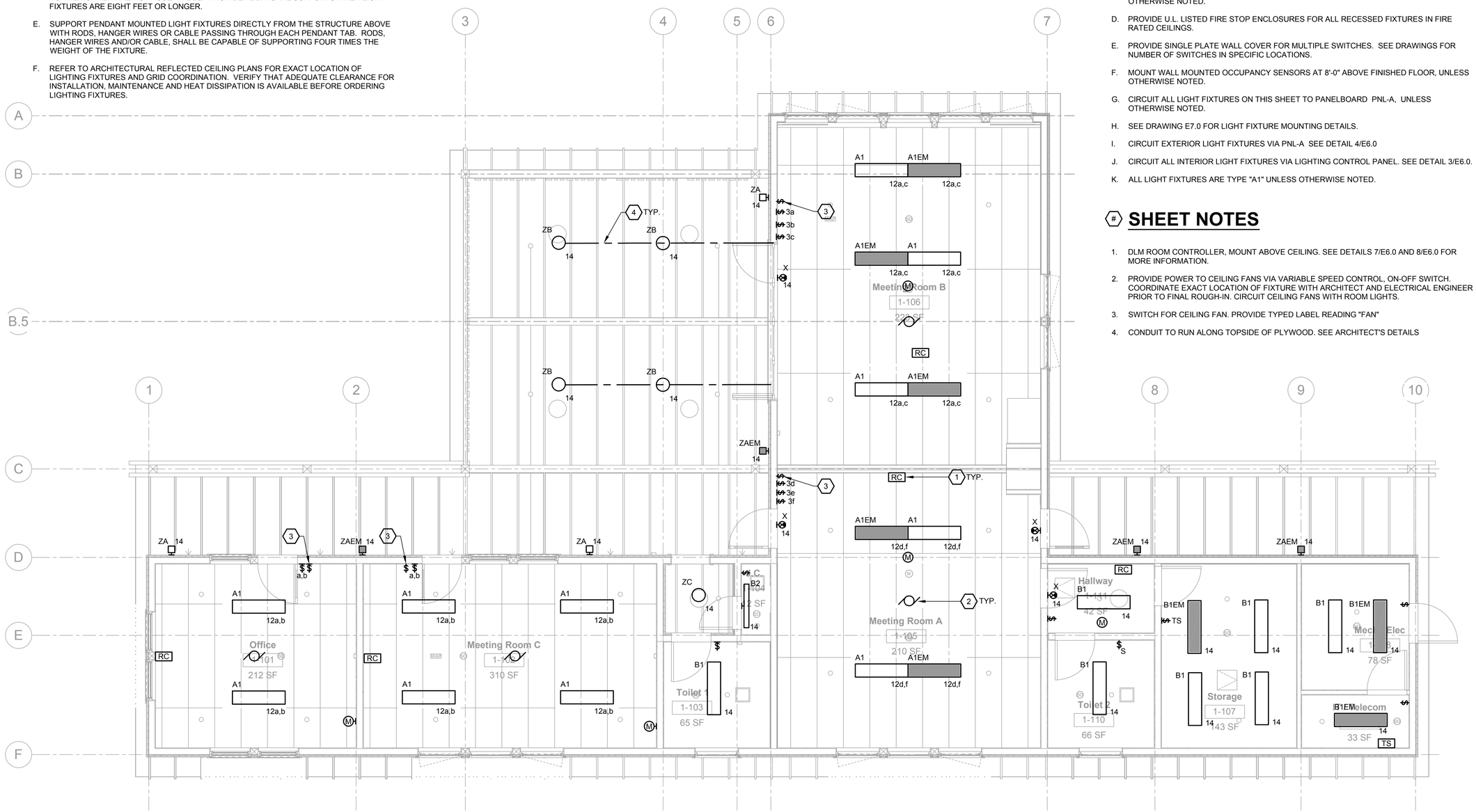

GENERAL NOTES

A. SEE ARCHITECTURAL DOCUMENTS FOR EXACT PLACEMENT OF ALL LIGHT FIXTURES, EXPOSED CONTROL DEVICES AND LIGHT SWITCHES. VERIFY CEILING TYPE WITH ARCHITECTURAL DOCUMENTS AND COORDINATE TRIMS. PROVIDE ALL REQUIRED FIXTURE MOUNTING HARDWARE. COORDINATE FIXTURE TYPES WITH MOUNTING SURFACE PRIOR TO ORDERING.

B. PENDANT FIXTURES SHALL BE FREE TO SWING A MINIMUM OF 45 DEGREES FROM THE VERTICAL IN ALL DIRECTIONS WITHOUT CONTACTING OBSTRUCTIONS, OTHERWISE PROVIDE SEISMIC RESTRAINT.

C. RUN ALL INTERIOR CONDUIT IN FINISHED INTERIOR AREAS CONCEALED UNLESS OTHERWISE NOTED.

D. PROVIDE U.L. LISTED FIRE STOP ENCLOSURES FOR ALL RECESSED FIXTURES IN FIRE RATED CEILINGS.

E. PROVIDE SINGLE PLATE WALL COVER FOR MULTIPLE SWITCHES. SEE DRAWINGS FOR NUMBER OF SWITCHES IN SPECIFIC LOCATIONS.

F. MOUNT WALL MOUNTED OCCUPANCY SENSORS AT 8'-0" ABOVE FINISHED FLOOR, UNLESS OTHERWISE NOTED.

G. CIRCUIT ALL LIGHT FIXTURES ON THIS SHEET TO PANELBOARD PNL-A, UNLESS OTHERWISE NOTED.

H. SEE DRAWING E7.0 FOR LIGHT FIXTURE MOUNTING DETAILS.

I. CIRCUIT EXTERIOR LIGHT FIXTURES VIA PNL-A SEE DETAIL 4/E6.0

J. CIRCUIT ALL INTERIOR LIGHT FIXTURES VIA LIGHTING CONTROL PANEL. SEE DETAIL 3/E6.0.

K. ALL LIGHT FIXTURES ARE TYPE "A1" UNLESS OTHERWISE NOTED.

SHEET NOTES

1. DLM ROOM CONTROLLER, MOUNT ABOVE CEILING. SEE DETAILS 7/E6.0 AND 8/E6.0 FOR MORE INFORMATION.
2. PROVIDE POWER TO CEILING FANS VIA VARIABLE SPEED CONTROL, ON-OFF SWITCH. COORDINATE EXACT LOCATION OF FIXTURE WITH ARCHITECT AND ELECTRICAL ENGINEER PRIOR TO FINAL ROUGH-IN. CIRCUIT CEILING FANS WITH ROOM LIGHTS.
3. SWITCH FOR CEILING FAN. PROVIDE TYPED LABEL READING "FAN"
4. CONDUIT TO RUN ALONG TOPSIDE OF PLYWOOD. SEE ARCHITECT'S DETAILS

1 CEILING FLOOR PLAN

1/4" - 1'-0"

4 0 4 8
SCALE OF FEET

Project Title:

City of Cupertino - McClellan Ranch Preserve
Environmental Education Center
Re-Bid

Design Firm:

SIEGEL & STRAIN Architects
1295 59th Street
Emeryville, CA 94608
510 / 547-8092
FAX 510 / 547-2604
info@siegelstrain.com

Consultant:

INTEGRAL GROUP
1084 Foxworthy Avenue
Suite 150
San Jose, CA 95118
408 448-6300
408 448-6301 fax
www.integralgroup.com

Stamp:

REGISTERED PROFESSIONAL ENGINEER
DAVID K. KANDA
E 14032
EXP. 06-30-14
ELECTRICAL
STATE OF CALIFORNIA

No.	Description	Date

Issue Note:

CONSTRUCTION DOCUMENTS 100%
01/10/2014

Project ID:	11-020
File Name:	JSWB-A-00.rvt
Drawn by:	Ben Buschmann
Checked by:	David Maino
Plot Date:	01/08/2014
Scale:	

Sheet Title:

CEILING
FLOOR PLAN

Sheet No.:

E1-3.0

GENERAL NOTES

1. COORDINATE EXACT LOCATIONS OF ALL ARCHITECTURAL, MECHANICAL AND PLUMBING EQUIPMENT WITH ARCHITECTURAL, MECHANICAL AND PLUMBING DRAWINGS.
2. CIRCUIT ALL DEVICES ON THIS SHEET TO PANELBOARD 'BBS', UNLESS OTHERWISE NOTED.
3. SIZE FUSES FOR ALL MECHANICAL AND PLUMBING EQUIPMENT PER MANUFACTURER'S RECOMMENDATIONS.
4. IN FINISHED INTERIOR AREAS, RUN ALL CONDUITS CONCEALED, UNLESS OTHERWISE NOTED. PAINT ALL EXPOSED CONDUITS AND ELECTRICAL EQUIPMENT. REFER TO ARCHITECTS PAINTING SECTION FOR REQUIREMENTS.
5. SEE EQUIPMENT SCHEDULE ELECTRICAL REQUIREMENTS FOR CIRCUITING OF EQUIPMENT AND REFER TO RISER DIAGRAMS AND DETAILS FOR ADDITIONAL INFORMATION ON WIRING, LAYOUT AND CONNECTIONS. SEE MECHANICAL AND PLUMBING DRAWINGS FOR ADDITIONAL INFORMATION.
6. PROVIDE POWER 120V/24V TRANSFORMER AS REQUIRED TO POWER VAV/BY-PASS DAMPERS, RESTROOM PLUMBING CONTROLS, DUCT SMOKE DETECTORS, MAGNETIC DOOR HOLDERS AND FIRE SMOKE DAMPERS FOR MECHANICAL EQUIPMENT. SEE DIAGRAMS ON MECHANICAL AND PLUMBING DRAWINGS FOR CONNECTION TO MECHANICAL AND PLUMBING EQUIPMENT. PROVIDE CIRCUIT FORM NEAREST AVALIABLE PANEL, UNLESS OTHERWISE NOTED.

SHEET NOTES

1. SWITCH AND JUNCTION BOX FOR FUTURE EXHAUSE FAN LOCATION.

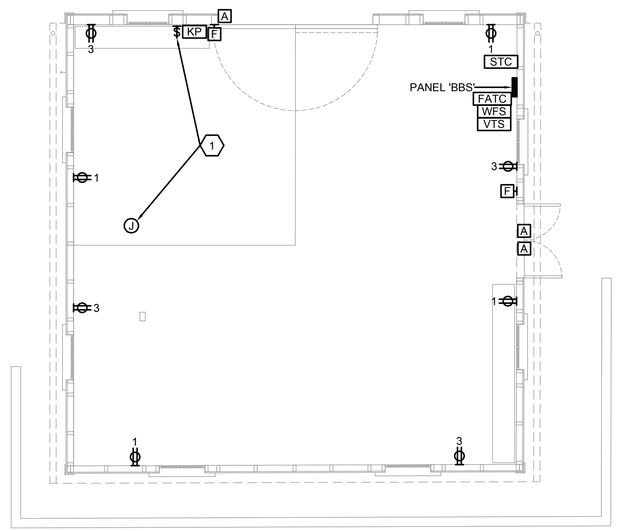

1 **POWER FLOOR PLAN**
1/4" - 1'-0"

4 0 4 8
SCALE OF FEET

Project Title:

City of Cupertino - McClellan Ranch Preserve
Environmental Education Center
Re-Bid

Design Firm:

SIEGEL & STRAIN Architects
1295 59th Street
Emeryville, CA 94608
510 / 547-8092
FAX 510 / 547-2604
info@siegelstrain.com

Consultant:

INTEGRAL GROUP
1084 Foxworthy Avenue
Suite 110
San Jose, CA 95118
408 448-6300
408 448-6301 fax
www.integralgroup.com

Stamp:

REGISTERED PROFESSIONAL ENGINEER
DAVID K. KAMOY
E 14003
EXP 12-31-14
ELECTRICAL
STATE OF CALIFORNIA

No.	Description	Date

Issue Note:
CONSTRUCTION DOCUMENTS 100%
01/10/2014

Project ID:	11-020
File Name:	JSWB-A-00.rvt
Drawn by:	Ben Buschmann
Checked by:	David Maino
Plot Date:	01/08/2014
Scale:	

Sheet Title:
BLACKSMITH SHOP
POWER FLOOR PLAN

Sheet No.:
E3-2.0

GENERAL NOTES

A. SEE ARCHITECTURAL DOCUMENTS FOR EXACT PLACEMENT OF ALL LIGHT FIXTURES, EXPOSED CONTROL DEVICES AND LIGHT SWITCHES. VERIFY CEILING TYPE WITH ARCHITECTURAL DOCUMENTS AND COORDINATE TRIMS. PROVIDE ALL REQUIRED FIXTURE MOUNTING HARDWARE. COORDINATE FIXTURE TYPES WITH MOUNTING SURFACE PRIOR TO ORDERING.

B. PENDANT FIXTURES SHALL BE FREE TO SWING A MINIMUM OF 45 DEGREES FROM THE VERTICAL IN ALL DIRECTIONS WITHOUT CONTACTING OBSTRUCTIONS, OTHERWISE PROVIDE SEISMIC RESTRAINT.

C. RUN ALL INTERIOR CONDUIT IN FINISHED INTERIOR AREAS CONCEALED UNLESS OTHERWISE NOTED.

D. PROVIDE U.L. LISTED FIRE STOP ENCLOSURES FOR ALL RECESSED FIXTURES IN FIRE RATED CEILINGS.

E. PROVIDE SINGLE PLATE WALL COVER FOR MULTIPLE SWITCHES. SEE DRAWINGS FOR NUMBER OF SWITCHES IN SPECIFIC LOCATIONS.

F. MOUNT WALL MOUNTED OCCUPANCY SENSORS AT 8'-0" ABOVE FINISHED FLOOR, UNLESS OTHERWISE NOTED.

G. CIRCUIT ALL LIGHT FIXTURES ON THIS SHEET TO PANELBOARD 'BBS', UNLESS OTHERWISE NOTED.

H. ALL LIGHT FIXTURES ARE TYPE "P1" UNLESS OTHERWISE NOTED.

SHEET NOTES

1. PHOTOSENSOR TO CONTROL FIXTURE P2

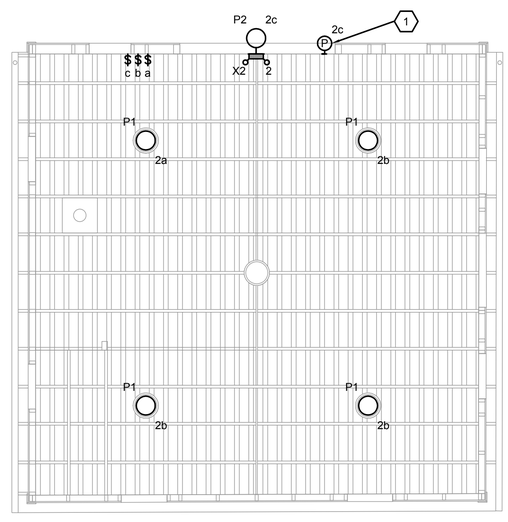

1 CEILING FLOOR PLAN

1/4" - 1'-0"

4 0 4 8

SCALE OF FEET

Project Title:

City of Cupertino - McClellan Ranch Preserve
Environmental Education Center
Re-Bid

Design Firm:

SIEGEL & STRAIN Architects
1295 59th Street
Emeryville, CA 94608
510 / 547-8092
FAX 510 / 547-2604
info@siegelstrain.com

Consultant:

INTEGRAL GROUP
1084 Foxworthy Avenue
Suite 150
San Jose, CA 95118
408 448-6300
408 448-6301 fax
www.integralgroup.com

Stamp:

No.	Description	Date

Issue Note:

CONSTRUCTION DOCUMENTS 100%
01/10/2014

Project ID:	11-020
File Name:	JSWB-A-00.rvt
Drawn by:	Ben Buschmann
Checked by:	David Maino
Plot Date:	01/08/2014
Scale:	

Sheet Title:

BLACKSMITH SHOP
LIGHTING PLAN

Sheet No.:

E3-3.0